TV/VCR Combi **Tape Deck: Turbo Drive** **Delta 2000**

Service
Service
Service

14PVxxx

14PV100/01/07/58
14PV200/01
14PV211/01/07/39/58
14PV217/01/07/39
14PV330/01/07/39
14PV334/01/07/39
14PV335/01/07/39
14PV400/01/07/39/58
14PV404/01/07/39
14PV405/01/07/39/58
14PV406/01/07/39
21PV330/01/07/39/58
21PV700/07/39
21PV708/07/39
25PV808/07/39
37TVB51/39
51TVB61/39
37TR216/03/39
51TR226/03/39

Service Manual

Evolution: AA

(GB) For chapters 1 and 2 reference is made to the Service Manual of TVCR 99 Delta **3103 785 20010.**
The present Manual states only the differences.

(D) Für die Kapitel 1 und 2 siehe Service Manual TVCR 99 Delta **3103 785 20000.**
In dieser Dokumentation sind nur die Unterschiede enthalten.

(NL) Voor de hoofdstuk 1 en 2 wordt verwezen naar de Service Documentatie van de TVCR 99 Delta **3103 785 20030.**
Alleen de verschillen worden in deze documentatie gegeven.

(F) Pour ce qui est des chapitres 1 et 2 veuillez vous référer à la Documentation Service du TVCR 99 Delta **3103 785 20020.**
Cette documentation ne reprend que les différences.

(I) Per i capitoli 1 e 2 veda il Manuale di Servizio di TVCR 99 Delta **3103 785 20040.**
La presente documentazione contene soltanto le differenze.

(E) Para los capítolos 1 y 2 véase el manual de servicio de TVCR 99 Delta **3103 785 20050.**
La presente documentación contiene sólo las diferencias.

Safety regulations require that the set is restored to its original condition and that parts which are identical to those specified are used.

Survey of versions:

/01/03	PAL B/G (with VPS)
/05	PAL I UK
/07(mono)	PAL I Ireland
/07(stereo)	PAL/SECAM B/G,D/K,K1,I,L,L'
/39	PAL/SECAM B/G,D/K,K1,I,L,L'
/58	PAL/SECAM B/G,D/K
/75	PAL B/G,I

Remote control:

14PV100/01/07/58 37TVB51/39 51TVB61/39 37TR216/03/39 51TR226/03/39	RT711/201	8622 667 11201
14PV200/01 14PV211/01/07/39/58 14PV330/01/07/39 14PV334/01/07/39 21PV330/01/07/39/58	RT790/101	8622 667 90101
14PV217/01/07/39 14PV335/01/07/39	RT791/101	8622 667 91101
14PV400/01/07/39/58 14PV404/01/07/39	RT796/101	8622 667 96101
14PV405/01/07/39/58 14PV406/01/07/39	RT797/101	8622 667 97101
21PV700/07/39	RT795/101	8622 667 95101
21PV708/07/39 25PV808/07/39	RT798/101	8622 667 98101

Published by GH, Videq Service Department 0093 Printed in the Netherlands © Copyright reserved Subject to modification 3103 785 20460

PHILIPS

3-32

Cinch Out, Scart 2 Board (DOSCD)

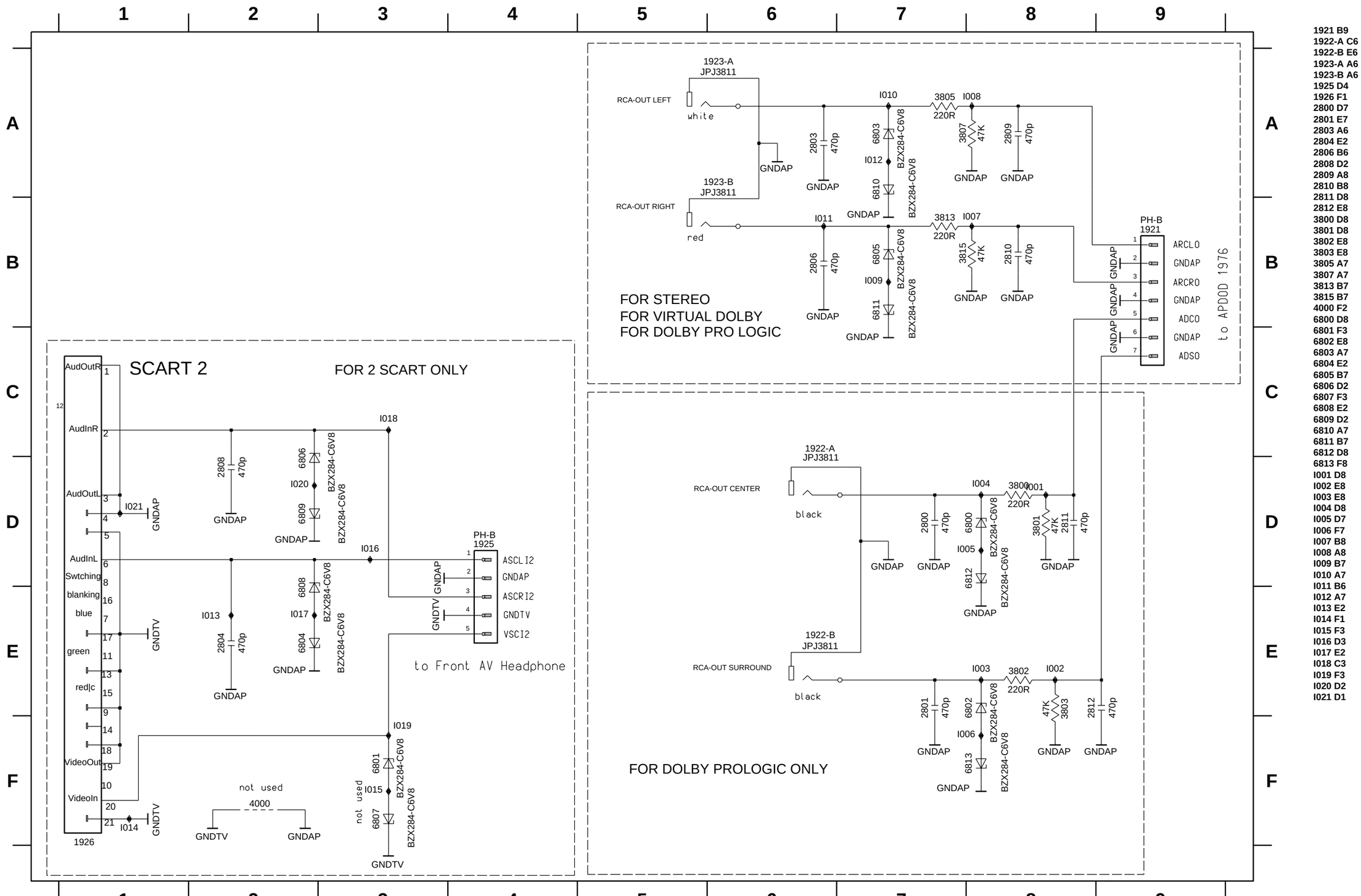

1921 B9
1922-A C6
1922-B E6
1923-A A6
1923-B A6
1925 D4
1926 F1
2800 D7
2801 E7
2803 A6
2804 E2
2806 B6
2808 D2
2809 A8
2810 B8
2811 D8
2812 E8
3800 D8
3801 D8
3802 E8
3803 E8
3805 A7
3807 A7
3813 B7
3815 B7
4000 F2
6800 D8
6801 F3
6802 E8
6803 A7
6804 E2
6805 B7
6806 D2
6807 F3
6808 E2
6809 D2
6810 A7
6811 B7
6812 D8
6813 F8
I001 D8
I002 E8
I003 E8
I004 D8
I005 D7
I006 F7
I007 B8
I008 A8
I009 B7
I010 A7
I011 B6
I012 A7
I013 E2
I014 F1
I015 F3
I016 D3
I017 E2
I018 C3
I019 F3
I020 D2
I021 D1

Interconnections															
Circuit	ACO	AF	AF2	AIO1	AIO2	AL	AMP	AP	COTV	CVB	DE	DOSCD	HA	HPAV	IO_1
page	3-29	3-22	3-30	3-16	3-17	3-23	3-13	3-21	3-14	3-19	3-18	3-32	3-26	3-27	3-11
Circuit	KB1D	KB2D	LS	MFSWD	PS (RUB)	PS (TVB)	PT	SF	SFD	TU1	TU2	TV	VS	VSEC	
page	3-33	3-34	3-8	3-34	3-15	3-7	3-28	3-12	3-31	3-9	3-20	3-10	3-24	3-25	

TABLE OF CONTENTS

Page

Front page 1-1
Table of contents 1-2
Survey of sets and features 1-3
Survey of sets and boards 1-4

III. SCHEMATICS

Interconnection wiring diagram 3-1
Block diagram - Tuner1, TV 3-2
Block diagram - Power Supply, Large Signal,TXT 3-3
Block diagram - In/Out, Audio 3-4
Block diagram - Tuner2, Video 3-5
Block diagram - Central Control, Deck Electronics 3-6
TV Board (TVB)
Power Supply (PS) - Schematic diagram 3-7
Deflection (LS) - Schematic diagram 3-8
Tuner 1 (TU1) - Schematic diagram 3-9
TV Processing (TV) - Schematic diagram 3-10
Input/Output (IO_1) - Schematic diagram 3-11
View Selector Audio (SF) - Schematic diagram 3-12
Amplifier (AMP) - Schematic diagram 3-13
Teletext Controller (COTV) - Schematic diagram 3-14
Recorder Unit Board (RUB)
Power Supply (PS) - Schematic diagram 3-15
Central Control 1 (AIO1) - Schematic diagram 3-16
Central Control 2 (AIO2) - Schematic diagram 3-17
Deck Electronics (DE) - Schematic diagram 3-18
Clock, VPS, Buzzer (CVB) - Schematic diagram 3-19
Tuner 2 (TU2) - Schematic diagram 3-20
Sound Processing (AP) - Schematic diagram 3-21
FM-Audio Processing (AF) - Schematic diagram 3-22
Linear Audio Processing (AL) - Schematic diagram 3-23
Video Signal Processing (VS) - Schematic diagram 3-24
SECAM Processing (VSEC) - Schematic diagram 3-25
Head Amplifier (HA) - Schematic diagram 3-26
Headphone, Front-AV Board (HPAV)
Schematic diagram 3-27
CRT-Board (PT)
Schematic diagram 3-28
Audio Board (APDOD)
Pre Amplifier (ACO) - Schematic diagram 3-29
Audio Processing (AF2) - Schematic diagram 3-30
Sound Feature Board (SFD)
Schematic diagram 3-31
Cinch Out, Scart 2 Board (DOSCD)
Schematic diagram 3-32
Keys & Display Board (KB1D)
Schematic diagram 3-33
Key Board (KB2D)
Schematic diagram 3-34
Mainsfilter Board (MFSWD)
Schematic diagram 3-34
Variant list
Tuner 1 - TV Board (TVBAD) 3-35
Tuner 2- Recorder Unit Board (RUBAD) 3-36

IV. CIRCUIT BOARD DIAGRAMS

Sound Feature Board (SFD) 4-1
Mainsfilter Board (MFSWD) 4-1
Audio Board (APDOD) 4-1
TV Board (TVBCD), CRT Board, HPAV Board, Switch Board..
Components side 4-2
Copper side 4-5
TV Board (TVBDD), CRT Board, HPAV Board, Switch Board..
Components side 4-6
Copper side 4-9
Recorder Unit Board (RUB2D)
Components side 4-10
Copper side 4-11
Cinch Out, Scart 2 Board (DOSCD) 4-12
Keys & Display Board (KB1D, KB2D) 4-12

V. EXPLODED VIEWS AND PARTS LISTS

Mechanical parts list 5-1
Electrical parts list 5-4

SURVEY OF SETS AND FEATURES

Specs / Products	14PV100/01	14PV100/07	14PV100/58	14PV200/01	14PV211/01	14PV211/07	14PV211/39	14PV211/58	14PV217/01	14PV217/07	14PV217/39	14PV330/01	14PV330/07	14PV330/39	14PV334/01	14PV334/07	14PV334/39	14PV335/01	14PV335/07	14PV335/39	14PV400/01	14PV400/07	14PV400/39	14PV400/58	14PV404/01	14PV404/07	14PV404/39	14PV405/01	14PV405/07	14PV405/39	14PV405/58	14PV406/01	14PV406/07	14PV406/39	21PV330/01	21PV330/07	21PV330/39	21PV330/58	21PV700/07	21PV700/39	21PV708/07	21PV708/39	25PV808/07	25PV808/39	37TR216/03	37TR216/39	37TVB51/39	51TR226/03	51TR226/39	51TVB61/39
General																																																	
HiFi																																						•	•	•	•	•	•							
Screen Size	14"	14"	14"	14"	14"	14"	14"	14"	14"	14"	14"	14"	14"	14"	14"	14"	14"	14"	14"	14"	14"	14"	14"	14"	14"	14"	14"	14"	14"	14"	14"	14"	14"	14"	21"	21"	21"	21"	21"	21"	21"	21"	25"	25"	14"	14"	14"	20"	20"	20"
Backup Presets, Timer 1year	•	•	•	•	•	•	•	•	•	•	•	•	•	•	•	•	•	•	•	•	•	•	•	•	•	•	•	•	•	•	•	•	•	•	•	•	•	•	•	•	•	•	•	•	•	•	•	•	•
Backup Clock, Calendar 30 min.	•	•	•	•	•	•	•	•	•	•	•	•	•	•	•	•	•	•	•	•	•	•	•	•	•	•	•	•	•	•	•	•	•	•	•	•	•	•	•	•	•	•	•	•	•	•	•	•	•
Reception																																																	
Number of presets	99	99	99	99	99	99	99	99	99	99	99	99	99	99	99	99	99	99	99	99	99	99	99	99	99	99	99	99	99	99	99	99	99	99	99	99	99	99	99	99	99	99	99	99	99	99	99	99	99
Number of Tuners	1	1	1	1	1	1	1	1	1	1	1	2	2	2	2	2	2	2	2	2	1	1	1	1	1	1	1	1	1	1	1	1	1	1	2	2	2	2	2	2	2	2	2	2	1	1	1	2	2	2
PAL B/G	•		•	•	•		•	•	•		•	•		•	•		•	•		•	•		•	•	•		•	•		•	•	•		•	•		•	•	•	•	•	•	•	•	•	•	•	•	•
PAL D/K			•					•																•						•							•	•	•	•	•	•						
PAL I		•				•	•			•	•		•	•		•	•		•	•		•	•		•	•			•	•			•	•		•	•	•	•	•	•			•	•		•	•
SECAM B/G			•				•	•			•			•			•			•			•	•			•			•	•					•	•	•	•	•	•			•	•		•	•
SECAM D/K			•					•																•						•							•	•	•	•	•	•						
SECAM K1																																						•	•	•	•	•	•						
SECAM L							•				•			•			•			•			•				•			•				•				•	•	•	•	•	•		•	•		•	•
SECAM L1							•				•			•			•			•			•				•			•				•				•	•	•	•	•	•		•	•		•	•
NTSC 3.58 External Input																																			•	•	•	•	•	•	•	•	•	•						
Sound Systems																																						•	•	•	•	•	•						
German Stereo																																						•	•	•	•	•	•						
NICAM																																						•	•	•	•	•	•						
Picture - Processing																																																	
Manual Wide Screen Switching																																			•	•	•	•	•	•	•	•	•	•						
Smart Pict. 4 Modes																																			•	•	•	•	•	•	•	•	•	•						
Sound																																																	
Music Power Output (Watts)	3	3	3	3	3	3	3	3	3	3	3	3	3	3	3	3	3	3	3	3	3	3	3	3	3	3	3	3	3	3	3	3	3	3	5	5	5	5	20	20	20	20	20	20	3	3	3	5	5	5
Dolby Virtual																																											•	•						
Incredible Surround																																							•	•	•	•								
Number of Speakers	1	1	1	1	1	1	1	1	1	1	1	1	1	1	1	1	1	1	1	1	1	1	1	1	1	1	1	1	1	1	1	1	1	1	1	1	1	1	2	2	2	2	2	2	1	1	1	1	1	1
Balance																																							•	•	•	•	•	•						
Bass																																							•	•	•	•	•	•						
Treble																																							•	•	•	•	•	•						
Loudness																																							•	•	•	•	•	•						
Smart Sound 4 Modes																																			•	•	•	•	•	•	•	•	•	•						
Special Features																																																	
Child Lock	•	•	•	•	•	•	•	•	•	•	•	•	•	•	•	•	•	•	•	•	•	•	•	•	•	•	•	•	•	•	•	•	•	•	•	•	•	•	•	•	•	•	•	•	•	•	•	•	•
VCR1/VCR2																																			•	•	•	•	•	•	•	•	•	•						
Hotel mode	•	•	•	•	•	•	•	•	•	•	•	•	•	•	•	•	•	•	•	•	•	•	•	•	•	•	•	•	•	•	•	•	•	•	•	•	•	•	•	•	•	•	•	•	•	•	•	•	•
Program List				•	•	•	•	•	•	•	•	•	•	•	•	•	•	•	•	•	•	•	•	•	•	•	•	•	•	•	•	•	•	•	•	•	•	•	•	•	•	•	•	•				•	•	•
Tuning/Install Features																																																	
Auto Channel Install (ACI)				•	•	•	•	•	•	•	•	•	•	•	•	•	•	•	•	•	•	•	•	•	•	•	•	•	•	•	•	•	•	•	•	•	•	•	•	•	•	•	•	•						
Auto Install						•				•			•			•			•			•				•				•				•			•			•			•							
Auto Store +	•	•	•																																										•	•	•	•	•	•
Smart Clock, Date Download				•	•	•	•	•	•	•	•	•	•	•	•	•	•	•	•	•	•	•	•	•	•	•	•	•	•	•	•	•	•	•	•	•	•	•	•	•	•	•	•	•				•	•	•
Connectors																																																	
Scart 2																																						•	•	•	•	•	•						
Cinch stereo out																																						•	•	•	•	•	•						
Cinch CVBS in					•	•	•	•	•	•	•	•	•	•	•	•	•	•	•	•	•	•	•	•	•	•	•	•	•	•	•	•	•	•	•	•	•	•	•	•	•	•	•						
Cinch audio in					•	•	•	•	•	•	•	•	•	•	•	•	•	•	•	•	•	•	•	•	•	•	•	•	•	•	•	•	•	•	•	•	•	•	•	•	•	•	•						
Headphone Out				•	•	•	•	•	•	•	•	•	•	•	•	•	•	•	•	•	•	•	•	•	•	•	•	•	•	•	•	•	•	•	•	•	•	•	•	•	•	•	•						
Teletext Standard																																																	
World Standard Text FLOF				•	•	•	•	•	•	•	•	•	•	•	•	•	•	•	•	•	•	•	•	•	•	•	•	•	•	•	•	•	•	•	•	•	•	•	•	•	•	•	•						
WST TOP																																			•	•	•	•	•	•	•	•	•	•						
Teletext 1 page memory				•	•	•	•	•	•	•	•	•	•	•	•	•	•	•	•	•	•	•	•	•	•	•	•	•	•	•	•	•	•	•														•	•	•
Teletext 10 page memory																																			•	•	•	•	•	•	•	•	•	•						
Built in Radio																					•	•	•	•	•	•	•	•	•	•	•	•	•	•																
Tape Deck																																																	
Number of Video Heads	2	2	2	2	2	2	2	2	2	2	2	2	2	2	2	2	2	2	2	2	2	2	2	2	2	2	2	2	2	2	2	2	2	2	2	2	2	4	4	4	4	4	4	4	2	2	2	2	2	2
Number of FM Audio Heads																																							2	2	2	2	2	2						
Automatic tape length recognition												•	•	•	•	•	•	•	•	•	•	•	•	•	•	•	•	•	•	•	•	•	•	•	•	•	•	•	•	•	•	•	•	•						
Crystal Clear Video					•	•	•	•	•	•	•	•	•	•	•	•	•	•	•	•	•	•	•	•	•	•	•	•	•	•	•	•	•	•	•	•	•	•	•	•	•	•	•	•						
Digital Studio Picture Control	•	•	•	•	•	•	•	•	•	•	•	•	•	•	•	•	•	•	•	•	•	•	•	•	•	•	•	•	•	•	•	•	•	•	•	•	•	•	•	•	•	•	•	•						
Winding Time (E180 in sec.)	260	260	260	260	260	260	260	260	260	260	260	100	100	100	100	100	100	100	100	100	100	100	100	100	100	100	100	100	100	100	100	100	100	100	100	100	100	100	100	100	100	100	100	100	260	260	260	260	260	260
Rewind Time (E180 in sec.)	170	170	170	170	170	170	170	170	170	170	170	100	100	100	100	100	100	100	100	100	100	100	100	100	100	100	100	100	100	100	100	100	100	100	100	100	100	100	100	100	100	100	100	100	170	170	170	170	170	170
Tape Counter																																																	
Linear relative	•	•	•	•	•	•	•	•	•	•	•																																			•	•	•	•	•	•
Linear time used/left												•	•	•	•	•	•	•	•	•	•	•	•	•	•	•	•	•	•	•	•	•	•	•	•	•	•	•	•	•	•	•	•	•						
Non linear NTSC Pb	•	•	•	•	•	•	•	•	•	•	•	•	•	•	•	•	•	•	•	•	•	•	•	•	•	•	•	•	•	•	•	•	•	•	•	•	•	•	•	•	•	•	•	•	•	•		•	•	•
Rec/Pb Standard																																																	
MESECAM			•				•	•			•			•			•			•			•	•			•			•	•			•				•	•	•	•	•	•		•	•		•	•
PAL	•	•	•	•	•	•	•	•	•	•	•	•	•	•	•	•	•	•	•	•	•	•	•	•	•	•	•	•	•	•	•	•	•	•	•	•	•	•	•	•	•	•	•	•	•	•	•	•	•	•
SECAM							•				•			•			•			•			•				•			•				•				•	•	•	•	•	•		•	•		•	•
NTSC (non-stand. Pb in colour)	•	•	•	•	•	•	•	•	•	•	•	•	•	•	•	•	•	•	•	•	•	•	•	•	•	•	•	•	•	•	•	•	•	•	•	•	•	•	•	•	•	•	•	•	•	•		•	•	•
Programming System																																																	
Showview/VideoPlus+					•	•	•	•	•	•	•	•	•	•	•	•	•	•	•	•	•	•	•	•	•	•	•	•	•	•	•	•	•	•	•	•	•	•	•	•	•	•	•	•	•	•		•	•	
VPS/PDC, Netname Download				•	•	•	•	•	•	•	•	•	•	•	•	•	•	•	•	•	•	•	•	•	•	•	•	•	•	•	•	•	•	•	•	•	•	•	•	•	•	•	•	•				•	•	•
VPT/TXT Programming												•	•		•	•		•	•		•	•		•	•	•		•	•		•	•	•						•	•	•	•	•	•						
One-Touch-SAT-Rec (Record Prepared)																																			•	•	•	•	•	•	•	•	•	•						

3-10

TV-Processing (TV) - TV Board (TVB)

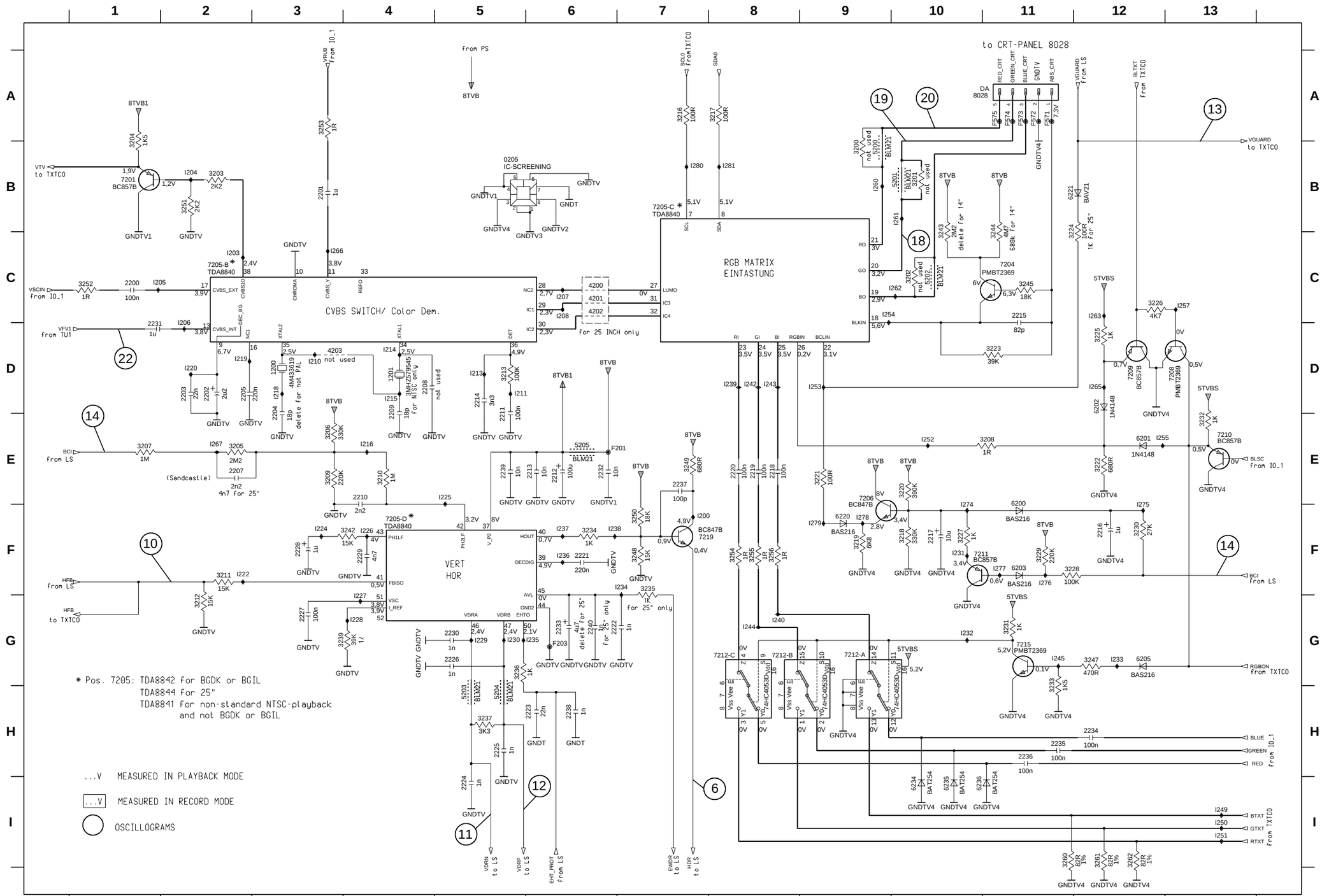

Interconnections														
Circuit	ACO	AF	AF2	AIO1	AIO2	AL	AMP	AP	COTV	CVB	DE	DOSCD	HA	HPAV	IO_1
page	3-29	3-22	3-30	3-16	3-17	3-23	3-13	3-21	3-14	3-19	3-18	3-32	3-26	3-27	3-11
Circuit	KB1D	KB2D	LS	MFSWD	PS (RUB)	PS (TVB)	PT	SF	SFD	TU1	TU2	TV	VS	VSEC	
page	3-33	3-34	3-8	3-34	3-15	3-7	3-28	3-12	3-31	3-9	3-20	3-10	3-24	3-25	

0205 B5 6234 I10
1200 D3 6235 I10
1201 D4 6236 I10
2200 C1 7201 B1
2201 B3 7204 C11
2202 D2 7205-B C2
2203 D2 7205-C B7
2204 D3 7205-D F4
2205 D2 7206 E9
2207 E2 7208 D13
2208 D4 7209 D12
2209 D4 7210 E13
2210 E4 7211 F11
2211 E5 7212-A G9
2212 E6 7212-B G8
2213 E6 7212-C G8
2214 D5 7215 G11
2215 C11 7219 F7
2216 F12 8028 A11
2217 F10 F201 E7
2218 E8 F203 G6
2219 E8 F571 A11
2220 E8 F572 A11
2221 F6 F573 A11
2222 G6 F574 A11
2223 H6 F575 A11
2224 I5 I200 F7
2225 H5 I203 C2
2226 G5 I204 B2
2227 G3 I205 C1
2228 F3 I206 C2
2229 F4 I207 C6
2230 G5 I208 C6
2231 D1 I210 D3
2232 E6 I211 D5
2233 G6 I213 D5
2234 H12 I214 D4
2235 H11 I215 D4
2236 H11 I216 E4
2237 E7 I218 D3
2238 H6 I219 D2
2239 E5 I220 D2
2240 G6 I222 F2
3200 B9 I224 F3
3201 B10 I225 E5
3202 C10 I226 F4
3203 B2 I227 G4
3204 A1 I228 G4
3205 E2 I229 G5
3206 E3 I230 G5
3207 E1 I231 F10
3208 E11 I232 G10
3209 E3 I233 G12
3210 E4 I234 F7
3211 F2 I235 G6
3212 G2 I236 F6
3213 D5 I237 F6
3216 A7 I238 F6
3217 A8 I239 D8
3218 F10 I240 G8
3219 F9 I242 D8
3220 E10 I243 D8
3221 E9 I244 G8
3222 E12 I245 G11
3223 D11 I249 I13
3224 B11 I250 I13
3225 D12 I251 I13
3226 C12 I252 E10
3227 F10 I253 D9
3228 F11 I254 C9
3229 F11 I255 E12
3230 F12 I257 C13
3231 G11 I260 B9
3232 E13 I261 B10
3233 G11 I262 C10
3234 F6 I263 C12
3235 F7 I265 D12
3236 G5 I266 C3
3237 H5 I267 E2
3239 G3 I274 E10
3242 F4 I275 E12
3243 B10 I276 F11
3244 B11 I277 F11
3245 C11 I278 F9
3247 G12 I279 F9
3248 F7 I280 B7
3249 E7 I281 B8
3250 F7
3251 B2
3252 C1
3253 A3
3254 F8
3255 F8
3256 F8
3260 I11
3261 I12
3262 I12
4200 C6
4201 C6
4202 C6
4203 D3
5200 B9
5201 B10
5202 C10
5203 H5
5204 H5
5205 E6
6200 F11
6201 E12
6202 D12
6203 F11
6205 G12
6220 F9
6221 B11

Input/Output (IO_1) - TV Board (TVB)

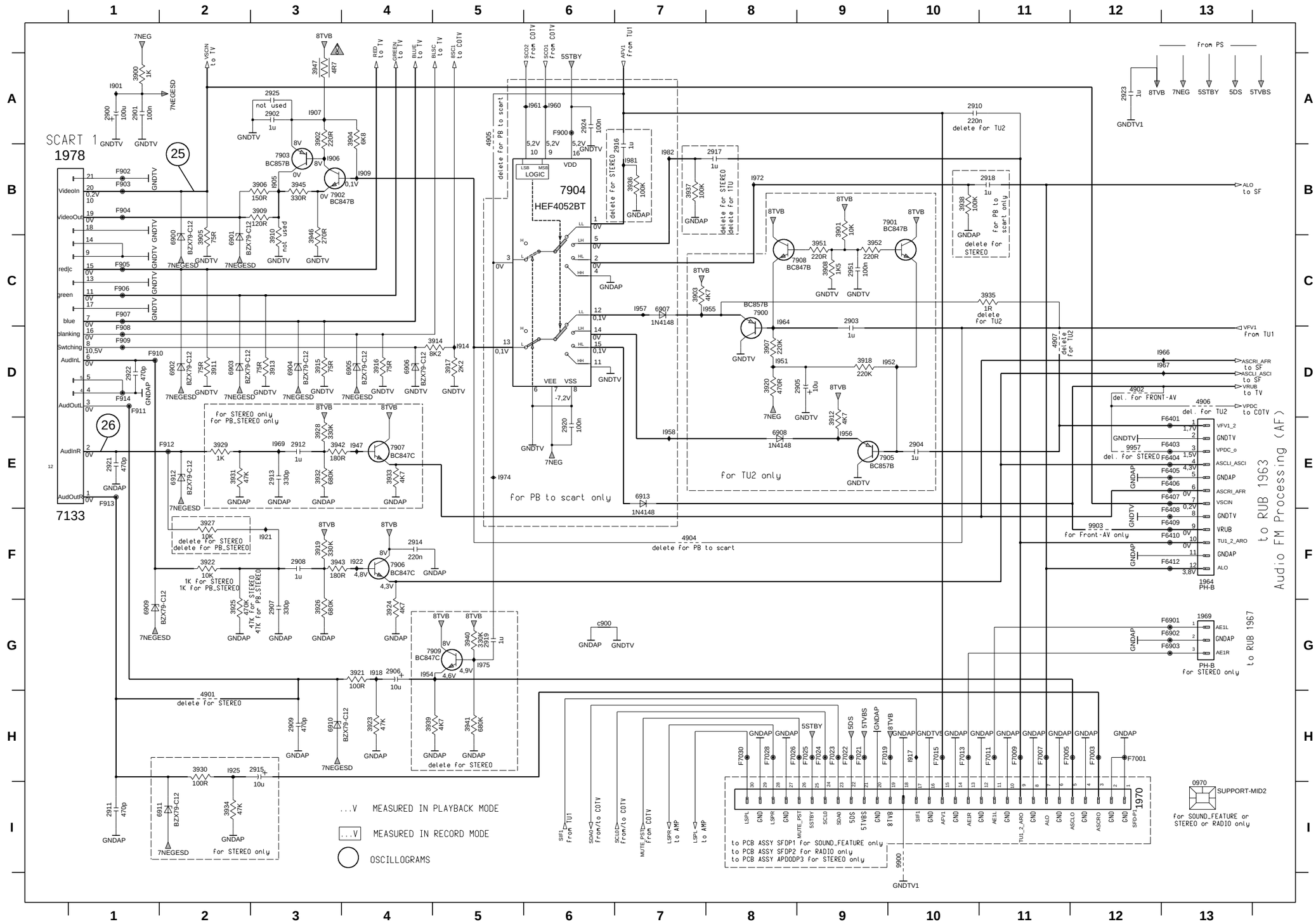

Interconnections															
Circuit	ACO	AF	AF2	AIO1	AIO2	AL	AMP	AP	COTV	CVB	DE	DOSCD	HA	HPAV	IO_1
page	3-29	3-22	3-30	3-16	3-17	3-23	3-13	3-21	3-14	3-19	3-18	3-32	3-26	3-27	3-11
Circuit	KB1D	KB2D	LS	MFSWD	PS (RUB)	PS (TVB)	PT	SF	SFD	TU1	TU2	TV	VS	VSEC	
page	3-33	3-34	3-8	3-34	3-15	3-7	3-28	3-12	3-31	3-9	3-20	3-10	3-24	3-25	

0970 I13
1964 F13
1969 G13
1970 I12
1978 B1
2900 A1
2901 A1
2902 A3
2903 C9
2904 E10
2905 D9
2906 G4
2907 G3
2908 F3
2909 H3
2910 A10
2911 I1
2912 E3
2913 E3
2914 F4
2915 H3
2916 B7
2917 B8
2918 B11
2919 G5
2920 E6
2921 E1
2922 D1
2923 A12
2924 A6
2925 A3
2951 C9
3900 A1
3901 B9
3902 A3
3903 C7
3904 A4
3905 C2
3906 B3
3907 D8
3908 C9
3909 B3
3910 C3
3911 D2
3912 E9
3913 D3
3914 D5
3915 D3
3916 D4
3917 D5
3918 D9
3919 F3
3920 D8
3921 G4
3922 F2
3923 H4
3924 G4
3925 G2
3926 G3
3927 F2
3928 E3
3929 E2
3930 H2
3931 E2
3932 E3
3933 E4
3934 I2
3935 C11
3936 B7
3937 B7
3938 B10
3939 H4
3940 G5
3941 H5
3942 E3
3943 F3
3945 B3
3946 C3
3947 A3
3951 C9
3952 C9
4901 H2
4902 D12
4904 F7
4905 A5
4906 D13
4907 D11
6900 C2
6901 C2
6902 D2
6903 D2
6904 D3
6905 D4
6906 D4
6907 C7
6908 E8
6909 G1
6910 H3
6911 I2
6912 E2
6913 E7
7900 C8
7901 B10
7902 B4
7903 B3
7904 B6
7905 E10
7906 F4
7907 E4
7908 C8
7909 G5
9900 I10
9903 F12
9957 E12
F6401 E13
F6403 E13
F6404 E13
F6405 E13
F6406 E13
F6407 E13
F6408 F13
F6409 F13
F6410 F13
F6412 F13
F6901 G13
F6902 G13
F6903 G13
F7001 H12
F7003 H12
F7005 H11
F7007 H11
F7009 H11
F7011 H11
F7013 H10
F7015 H10
F7019 H9
F7021 H9
F7022 H9
F7023 H9
F7024 H9
F7025 H9
F7026 H8
F7028 H8
F7030 H8
F900 A6
F902 B1
F903 B1
F904 B1
F905 C1
F906 C1
F907 C1
F908 D1
F909 D1
F910 D1
F911 D1
F912 E2
F913 E1
F914 D1
I901 A1
I905 B3
I906 B3
I907 A3
I909 B4
I914 D5
I917 H10
I918 G4
I921 F3
I922 F4
I925 H2
I947 E4
I951 D8
I952 D10
I954 G4
I955 C8
I956 E9
I957 C7
I958 E7
I960 A6
I961 A6
I964 C8
I966 D13
I967 D13
I969 E3
I972 B8
I974 E5
I975 G5
I981 B7
I982 B7
c900 G6

3-12

View Selector Audio (SF) - TV Board (TVB)

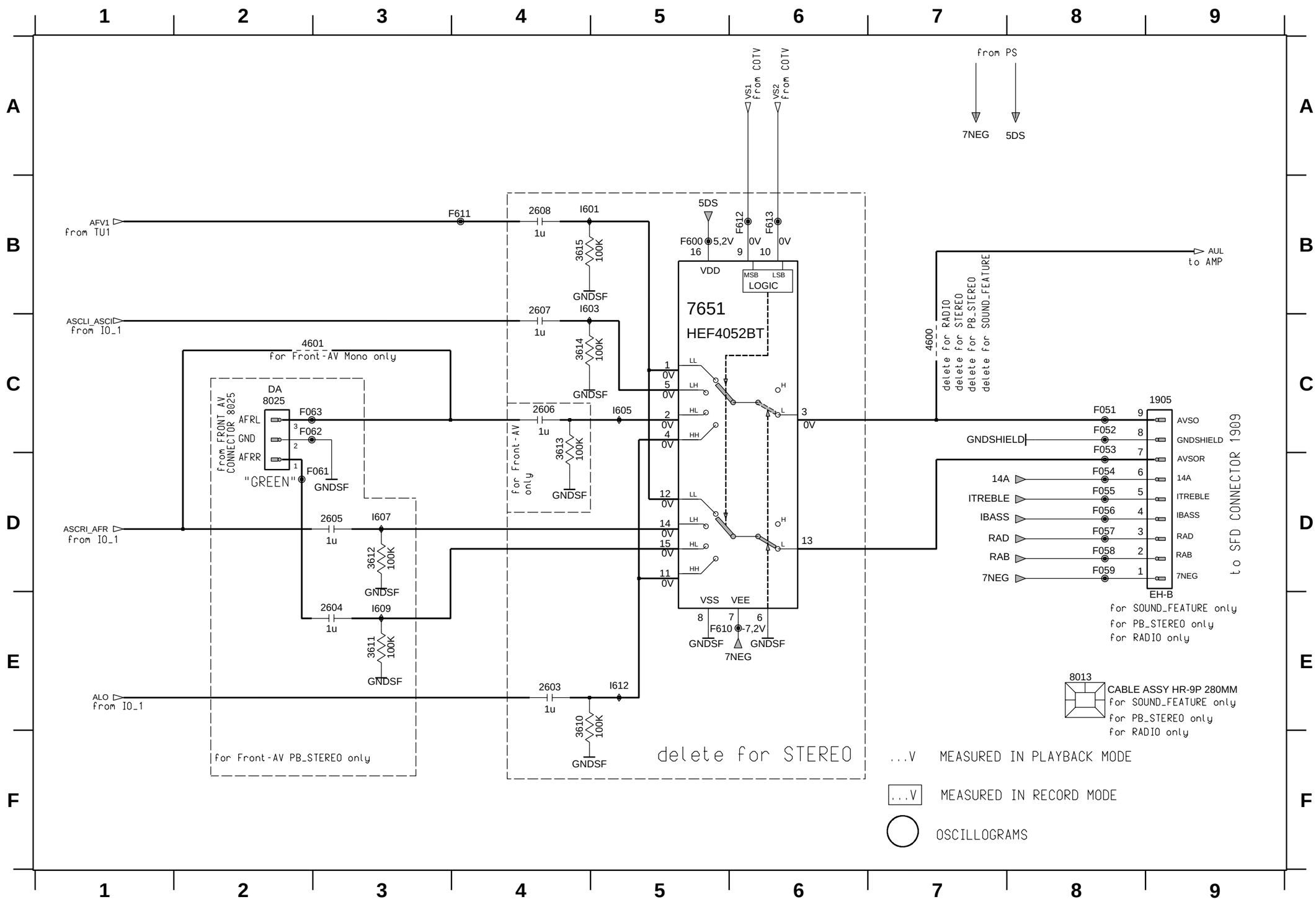

1905 C9
2603 E4
2604 E3
2605 D3
2606 C4
2607 B4
2608 B4
3610 E4
3611 E3
3612 D3
3613 C4
3614 C4
3615 B4
4600 C7
4601 C2
7651 C5
8013 E8
8025 C2
F051 C8
F052 C8
F053 C8
F054 D8
F055 D8
F056 D8
F057 D8
F058 D8
F059 D8
F061 D3
F062 C2
F063 C2
F600 B5
F610 E5
F611 B4
F612 B6
F613 B6
I601 B4
I603 B4
I605 C5
I607 D3
I609 E3
I612 E5

Interconnections															
Circuit	ACO	AF	AF2	AIO1	AIO2	AL	AMP	AP	COTV	CVB	DE	DOSCD	HA	HPAV	IO_1
page	3-29	3-22	3-30	3-16	3-17	3-23	3-13	3-21	3-14	3-19	3-18	3-32	3-26	3-27	3-11
Circuit	KB1D	KB2D	LS	MFSWD	PS (RUB)	PS (TVB)	PT	SF	SFD	TU1	TU2	TV	VS	VSEC	
page	3-33	3-34	3-8	3-34	3-15	3-7	3-28	3-12	3-31	3-9	3-20	3-10	3-24	3-25	

Amplifier (AMP) - TV Board (TVB)

0450 A3	2455 A5	2460 B5	2465 D4	3452 C6	3457 E5	3462 D8	3467 E6	3472 D4	4452 A4	6452 E7	7450 B4	8026 A10	F072 A9	I452 B3	I457 C5	I463 D6	I468 D5	I475 C8	I481 E8
2451 E4	2456 A5	2461 C5	2466 B3	3453 E6	3458 D4	3463 C8	3468 B1	3473 C9	4453 C7	6453 C8	7451 D5	9452 D10	F073 A9	I453 B7	I458 B2	I464 D6	I469 D5	I477 D7	I482 B5
2452 C3	2457 D7	2462 C9	2467 C3	3454 D6	3459 E7	3464 C8	3469 D1	3474 C9	4454 B7	6454 C9	7452 D5	9453 E7	F450 A4	I454 B3	I459 C2	I465 D4	I470 C4	I478 D9	c450 E8
2453 C3	2458 D8	2463 E5	3450 D3	3455 D5	3460 D8	3465 D6	3470 B2	4450 B9	6450 C5	6455 D9	7453 D7	9457 E8	F451 C5	I455 B6	I460 D7	I466 D5	I472 C7	I479 D10	
2454 B3	2459 E8	2464 D4	3451 C6	3456 E5	3461 D8	3466 B7	3471 D2	4451 C2	6451 C6	6456 D9	7454 C7	F071 A9	I451 B4	I456 C3	I462 C5	I467 D4	I473 C8	I480 D9	

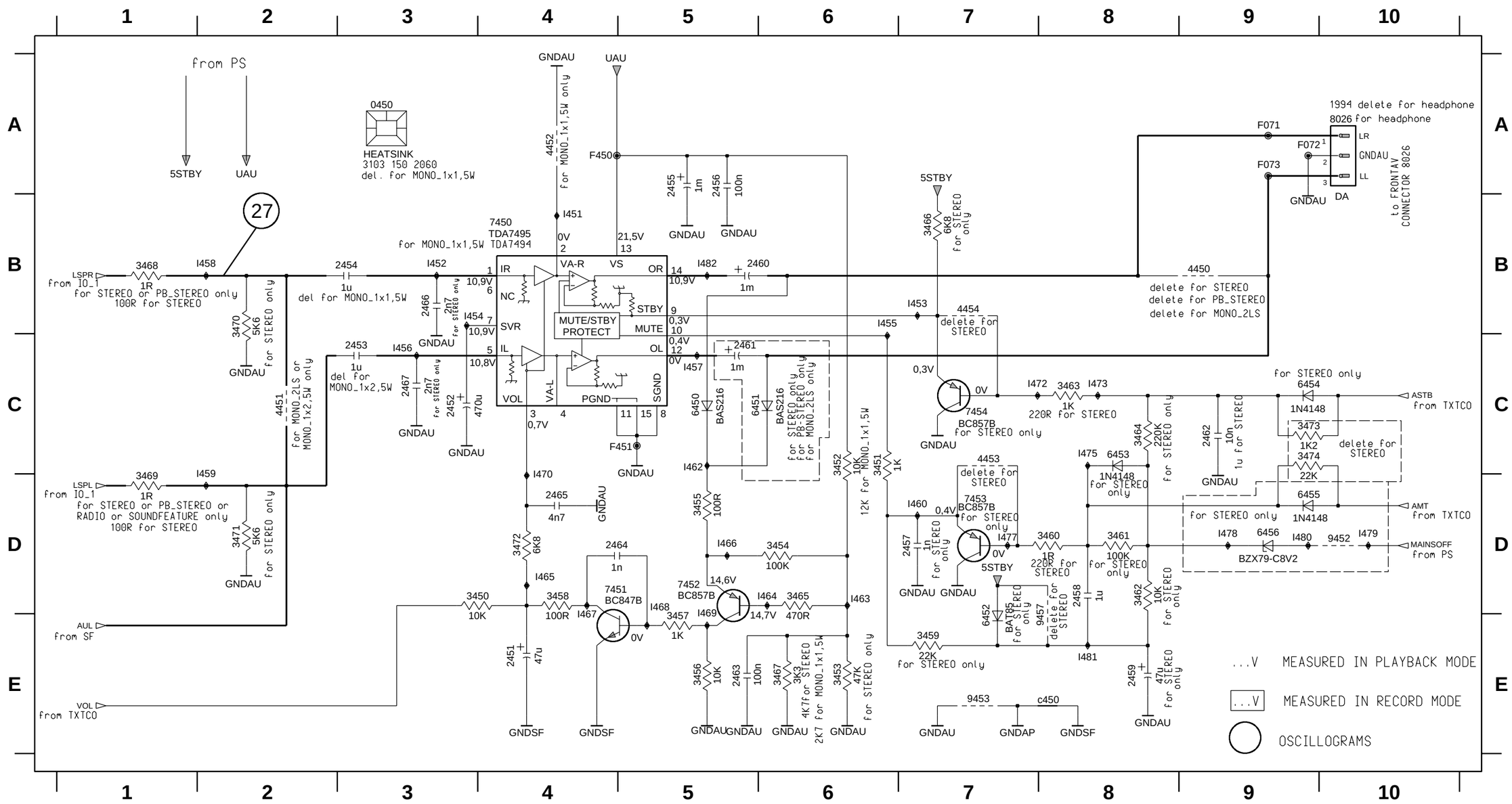

Interconnections															
Circuit	ACO	AF	AF2	AIO1	AIO2	AL	AMP	AP	COTV	CVB	DE	DOSCD	HA	HPAV	IO_1
page	3-29	3-22	3-30	3-16	3-17	3-23	3-13	3-21	3-14	3-19	3-18	3-32	3-26	3-27	3-11
Circuit	KB1D	KB2D	LS	MFSWD	PS (RUB)	PS (TVB)	PT	SF	SFD	TU1	TU2	TV	VS	VSEC	
page	3-33	3-34	3-8	3-34	3-15	3-7	3-28	3-12	3-31	3-9	3-20	3-10	3-24	3-25	

3-14

Teletext Controller (COTV) - TV Board (TVB)

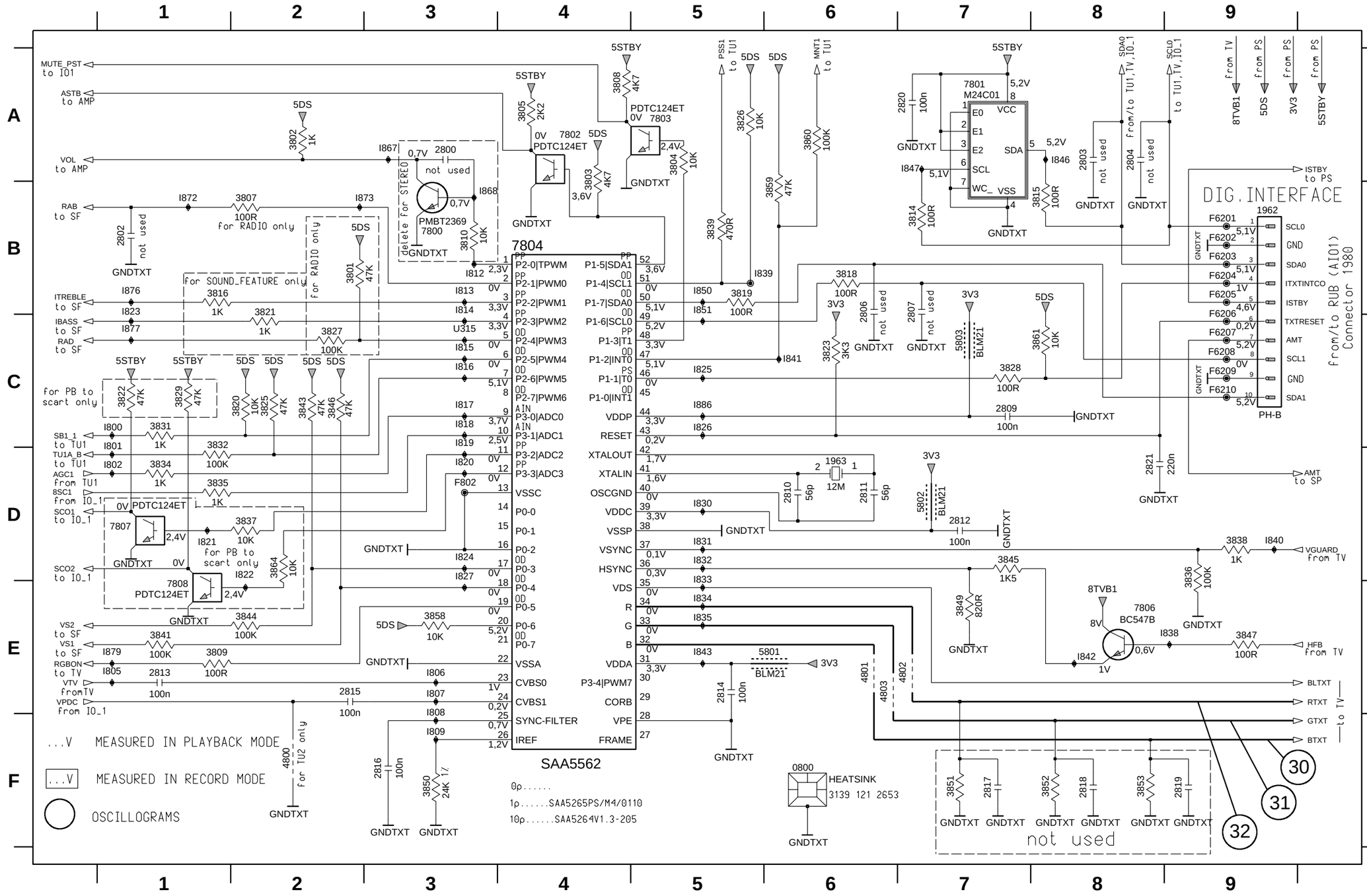

Interconnections															
Circuit	ACO	AF	AF2	AIO1	AIO2	AL	AMP	AP	COTV	CVB	DE	DOSCD	HA	HPAV	IO_1
page	3-29	3-22	3-30	3-16	3-17	3-23	3-13	3-21	3-14	3-19	3-18	3-32	3-26	3-27	3-11
Circuit	KB1D	KB2D	LS	MFSWD	PS (RUB)	PS (TVB)	PT	SF	SFD	TU1	TU2	TV	VS	VSEC	
page	3-33	3-34	3-8	3-34	3-15	3-7	3-28	3-12	3-31	3-9	3-20	3-10	3-24	3-25	

0800 F6 F6206 C9
1962 B9 F6207 C9
1963 D6 F6208 C9
2800 A3 F6209 C9
2802 B1 F6210 C9
2803 B8 F802 D3
2804 B8 I800 C1
2806 B6 I801 C1
2807 B7 I802 D1
2809 C7 I805 E1
2810 D6 I806 E3
2811 D6 I807 E3
2812 D7 I808 E3
2813 E1 I809 F3
2814 E5 I812 B3
2815 E2 I813 B3
2816 F3 I814 B3
2817 F7 I815 C3
2818 F8 I816 C3
2819 F9 I817 C3
2820 A7 I818 C3
2821 D8 I819 C3
3801 B2 I820 D3
3802 A2 I821 D1
3803 A4 I822 E2
3804 A5 I823 B1
3805 A4 I824 D3
3807 B2 I825 C5
3808 A4 I826 C5
3809 E1 I827 D3
3810 B3 I830 D5
3814 B7 I831 D5
3815 B8 I832 D5
3816 B1 I833 D5
3818 B6 I834 E5
3819 B5 I835 E5
3820 C2 I838 E9
3821 C2 I839 B5
3822 C1 I840 D9
3823 C6 I841 C6
3825 C2 I842 E8
3826 A5 I843 E5
3827 C2 I846 A8
3828 C7 I847 A7
3829 C1 I850 B5
3831 C1 I851 B5
3832 D1 I867 A3
3834 D1 I868 B3
3835 D1 I872 B1
3836 D9 I873 B3
3837 D2 I876 B1
3838 D9 I877 C1
3839 B5 I879 E1
3841 E1 I886 C5
3843 C2 U315 C3
3844 E2
3845 D7
3846 C2
3847 E9
3849 E7
3850 F3
3851 F7
3852 F8
3853 F8
3858 E3
3859 B6
3860 A6
3861 C8
3864 D2
4800 F2
4801 E6
4802 E7
4803 E6
5801 E6
5802 D7
5803 C7
7800 B3
7801 A7
7802 A4
7803 A5
7804 B4
7806 E8
7807 D1
7808 E1
F6201 B9
F6202 B9
F6203 B9
F6204 B9
F6205 B9

Power Supply (PS) - Recorder Unit Board (RUB)

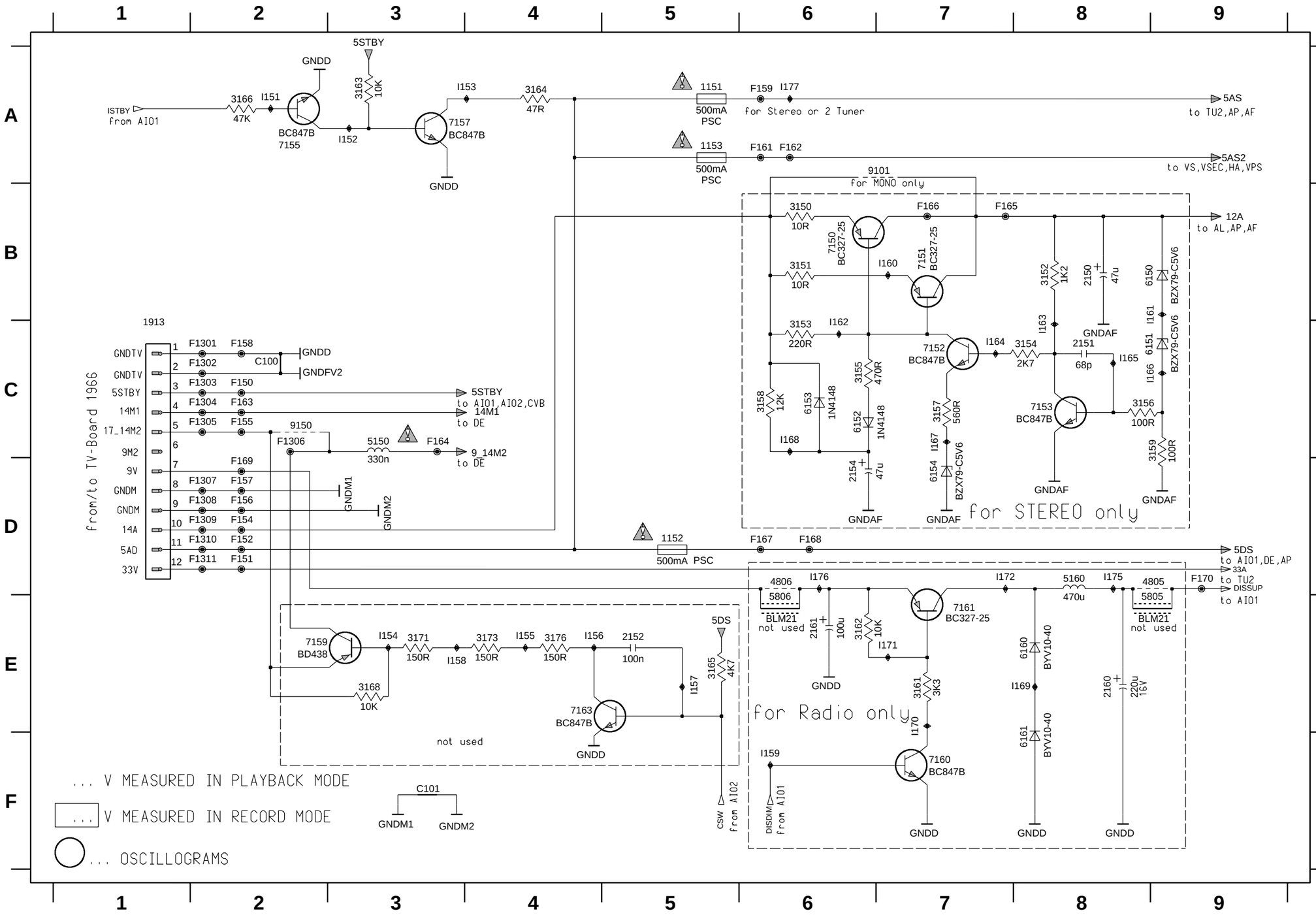

Interconnections															
Circuit	ACO	AF	AF2	AIO1	AIO2	AL	AMP	AP	COTV	CVB	DE	DOSCD	HA	HPAV	IO_1
page	3-29	3-22	3-30	3-16	3-17	3-23	3-13	3-21	3-14	3-19	3-18	3-32	3-26	3-27	3-11
Circuit	KB1D	KB2D	LS	MFSWD	PS (RUB)	PS (TVB)	PT	SF	SFD	TU1	TU2	TV	VS	VSEC	
page	3-33	3-34	3-8	3-34	3-15	3-7	3-28	3-12	3-31	3-9	3-20	3-10	3-24	3-25	

1151 A5
1152 D5
1153 A5
1913 C1
2150 B8
2151 C8
2152 E5
2154 D6
2160 E8
2161 E6
3150 B6
3151 B6
3152 B8
3153 C6
3154 C8
3155 C6
3156 C8
3157 C7
3158 C6
3159 C9
3161 E7
3162 E6
3163 A3
3164 A4
3165 E5
3166 A2
3168 E3
3171 E3
3173 E4
3176 E4
4805 D9
4806 D6
5150 C3
5160 D8
5805 E9
5806 E6
6150 B9
6151 C9
6152 C6
6153 C6
6154 D7
6160 E8
6161 F8
7150 B6
7151 B7
7152 C7
7153 C8
7155 A2
7157 A3
7159 E3
7160 F7
7161 E7
7163 E4
9101 A7
9150 C2
C100 C2
C101 F3
F1301 C2
F1302 C2
F1303 C2
F1304 C2
F1305 C2
F1306 C2
F1307 D2
F1308 D2
F1309 D2
F1310 D2
F1311 D2
F150 C2
F151 D2
F152 D2
F154 D2
F155 C2
F156 D2
F157 D2
F158 C2
F159 A6
F161 A6
F162 A6
F163 C2
F164 C3
F165 B7
F166 B7
F167 D6
F168 D6
F169 D2
F170 D9
I151 A2
I152 A3
I153 A4
I154 E3
I155 E4
I156 E4
I157 E5
I158 E3
I159 F6
I160 B7
I161 B8
I162 C6
I163 C8
I164 C7
I165 C8
I166 C8
I167 C7
I168 C6
I169 E8
I170 E7
I171 E7
I172 D7
I175 D8
I176 D6
I177 A6

3-16

Central Control 1 (AIO1) - Recorder Unit Board (RUB)

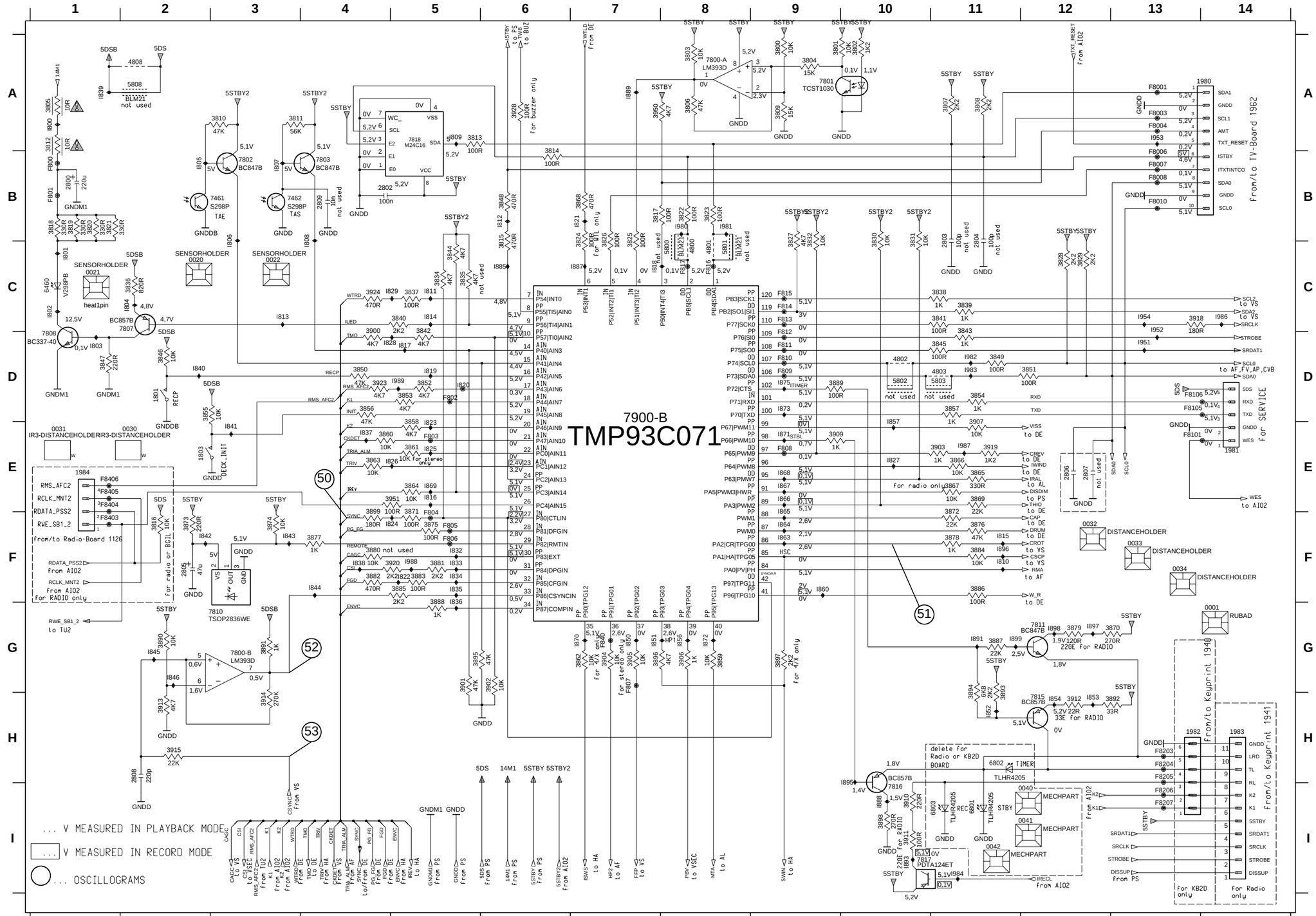
7900-B
TMP93C071
... V MEASURED IN PLAYBACK MODE
... V MEASURED IN RECORD MODE
... OSCILLOGRAMS
from/to TV-Board 1962
from/to Keyprint 1940
from/to Keyprint 1941
for SERVICE
from/to Radio-Board 1126
delete for Radio or KB2D BOARD
for KB2D only
for Radio only
RUBAD
DISTANCEHOLDER
IR3-DISTANCEHOLDER
SENSORHOLDER
heat1pin
BLM21 not used
for radio only
for stereo only
for buzzer only
not used
from/to Radio or B61L
from/to AIO2
from/to VS
from/to HA
from/to PS
from/to AF
from/to AL
from/to DE
from TU2
to TU2
to VS
to HA
to AF
to VSEC
to AL
to DE
to PS
to AIO2
from AIO2
from PS
from VS
from HA
from AF
from DE
from AL
from TU2
from AIO2
from AIO2
from AIO

Central Control 2 (AIO2) - Recorder Unit Board (RUB)

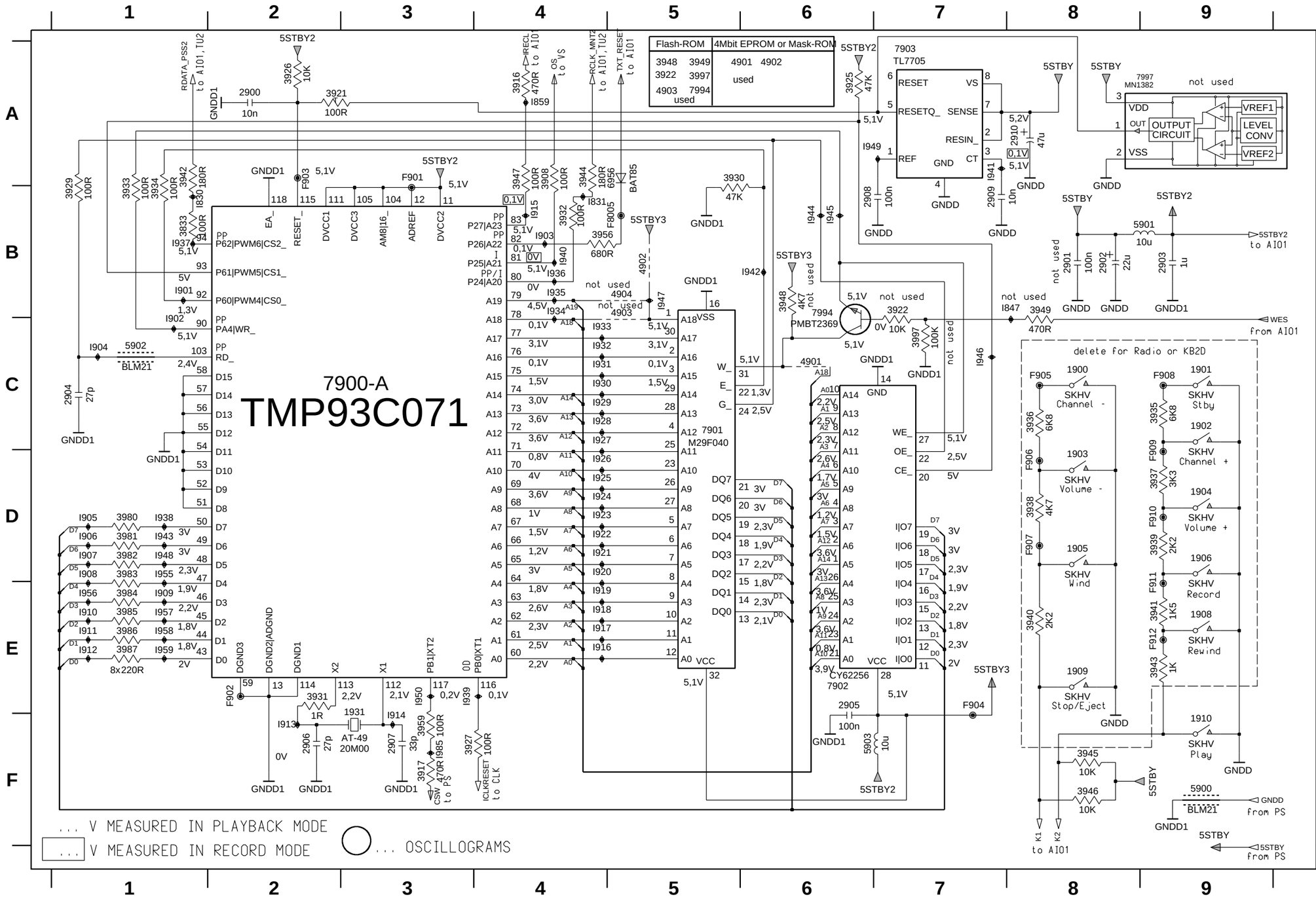

	Interconnections														
Circuit	ACO	AF	AF2	AIO1	AIO2	AL	AMP	AP	COTV	CVB	DE	DOSCD	HA	HPAV	IO_1
page	3-29	3-22	3-30	3-16	3-17	3-23	3-13	3-21	3-14	3-19	3-18	3-32	3-26	3-27	3-11
Circuit	KB1D	KB2D	LS	MFSWD	PS (RUB)	PS (TVB)	PT	SF	SFD	TU1	TU2	TV	VS	VSEC	
page	3-33	3-34	3-8	3-34	3-15	3-7	3-28	3-12	3-31	3-9	3-20	3-10	3-24	3-25	

1900 C8	F909 D9
1901 C9	F910 D9
1902 C9	F911 E9
1903 D8	F912 E9
1904 D9	I830 B1
1905 D8	I831 B4
1906 D9	I847 B8
1908 E9	I859 A4
1909 E8	I901 B1
1910 F9	I902 C1
1931 F3	I903 B4
2900 A2	I904 C1
2901 B8	I905 D1
2902 B8	I906 D1
2903 B9	I907 D1
2904 C1	I908 D1
2905 E6	I909 E1
2906 F2	I910 E1
2907 F3	I911 E1
2908 B6	I912 E1
2909 B7	I913 F2
2910 A8	I914 F3
3833 B1	I915 B4
3908 A4	I916 E4
3916 A4	I917 E4
3917 F3	I918 E4
3921 A2	I919 E4
3922 B7	I920 D4
3925 A6	I921 D4
3926 A2	I922 D4
3927 F3	I923 D4
3929 B1	I924 D4
3930 A5	I925 D4
3931 E2	I926 D4
3932 B4	I927 C4
3933 B1	I928 C4
3934 B1	I929 C4
3935 C9	I930 C4
3936 C8	I931 C4
3937 D9	I932 C4
3938 D8	I933 C4
3939 D9	I934 B4
3940 E8	I935 B4
3941 E9	I936 B4
3942 A1	I937 B1
3943 E9	I938 D1
3944 A4	I939 E3
3945 F8	I940 B4
3946 F8	I941 A7
3947 A4	I942 B6
3948 B6	I943 D1
3949 B8	I944 B6
3956 B4	I945 B6
3959 F3	I946 C7
3980 D1	I947 B5
3981 D1	I948 D1
3982 D1	I949 A6
3983 D1	I950 E3
3984 E1	I955 D1
3985 E1	I956 E1
3986 E1	I957 E1
3987 E1	I958 E1
3997 C7	I959 E1
4901 C6	I985 F3
4902 B5	
4903 B5	
4904 B5	
5900 F9	
5901 B9	
5902 C1	
5903 F6	
6956 A5	
7900-A C2	
7901 C5	
7902 E6	
7903 A7	
7994 B6	
7997 A9	
F8005 B5	
F901 A3	
F902 E2	
F903 A2	
F904 E7	
F905 C8	
F906 D8	
F907 D8	
F908 C9	

3-18

Deck Electronics (DE) - Recorder Unit Board (RUB)

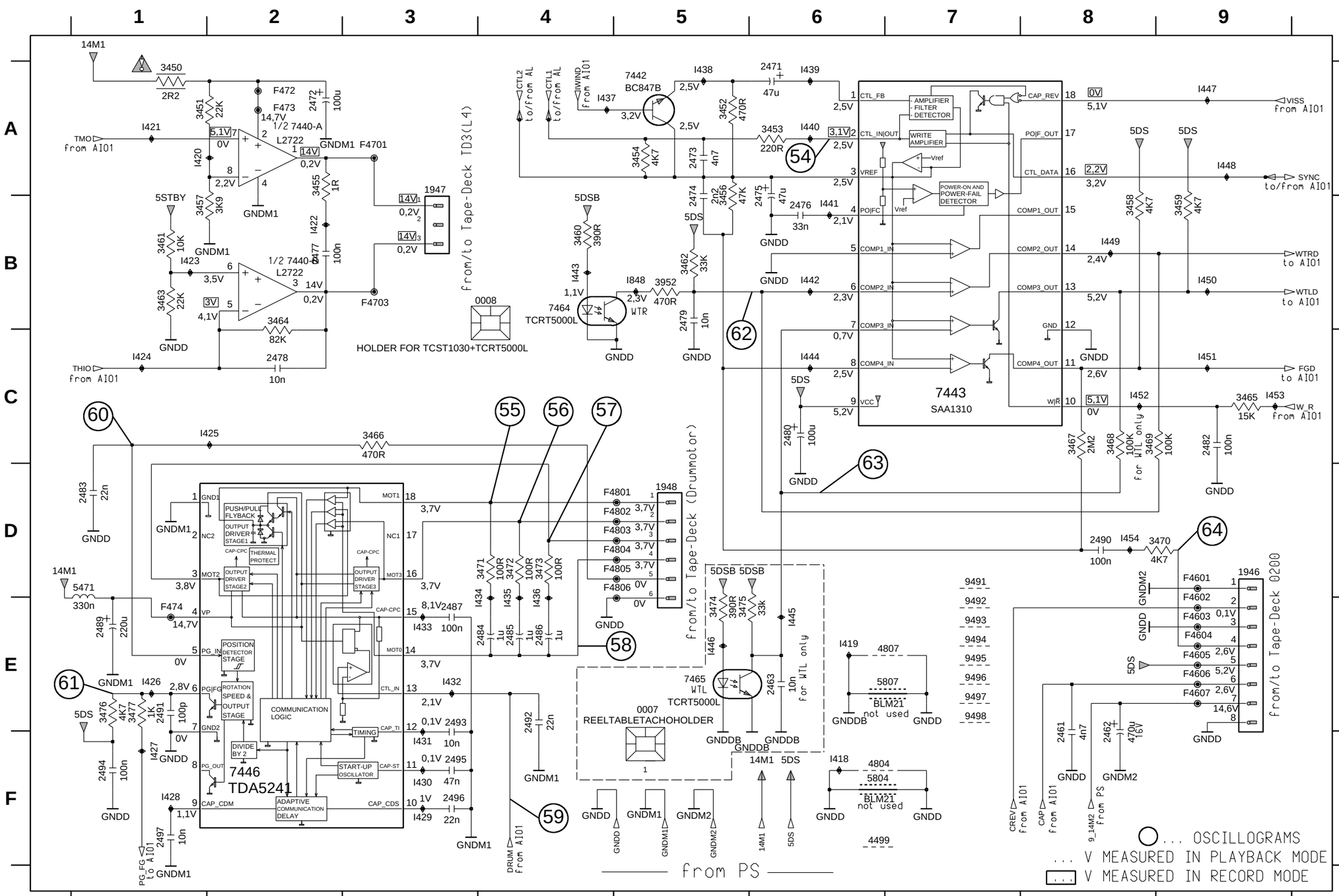

0007 E5	F4606 E9
0008 B3	F4607 E9
1946 D9	F4701 A3
1947 A3	F4703 B3
1948 D5	F472 A2
2461 F8	F473 A2
2462 F8	F474 E1
2463 E6	F4801 D5
2471 A6	F4802 D5
2472 A2	F4803 D5
2473 A5	F4804 D5
2474 B5	F4805 D5
2475 B6	F4806 D5
2476 B6	I418 F6
2477 B2	I419 E6
2478 C2	I420 A1
2479 B5	I421 A1
2480 C6	I422 B2
2482 C9	I423 B1
2483 D1	I424 C1
2484 E4	I425 C2
2485 E4	I426 E1
2486 E4	I427 F1
2487 E3	I428 F1
2489 E1	I429 F3
2490 D8	I430 F3
2491 E1	I431 F3
2492 E4	I432 E3
2493 E3	I433 E3
2494 F1	I434 E4
2495 F3	I435 E4
2496 F3	I436 E4
2497 F1	I437 A4
3450 A1	I438 A5
3451 A1	I439 A6
3452 A5	I440 A6
3453 A6	I441 B6
3454 A5	I442 B6
3455 A2	I443 B4
3456 B5	I444 C6
3457 B1	I445 E6
3458 B8	I446 E5
3459 B9	I447 A9
3460 B4	I448 A9
3461 B1	I449 B8
3462 B5	I450 B9
3463 B1	I451 C9
3464 B2	I452 C8
3465 C9	I453 C9
3466 C3	I454 D8
3467 C8	I848 B5
3468 C8	
3469 C8	
3470 D9	
3471 D4	
3472 D4	
3473 D4	
3474 E5	
3475 E5	
3476 E1	
3477 E1	
3952 B5	
4499 F6	
4804 F6	
4807 E7	
5471 D1	
5804 F6	
5807 E7	
7440-A A2	
7440-B B2	
7442 A5	
7443 C7	
7446 F2	
7464 B4	
7465 E5	
9491 D7	
9492 E7	
9493 E7	
9494 E7	
9495 E7	
9496 E7	
9497 E7	
9498 E7	

Interconnections															
Circuit	ACO	AF	AF2	AIO1	AIO2	AL	AMP	AP	COTV	CVB	DE	DOSCD	HA	HPAV	IO_1
page	3-29	3-22	3-30	3-16	3-17	3-23	3-13	3-21	3-14	3-19	3-18	3-32	3-26	3-27	3-11
Circuit	KB1D	KB2D	LS	MFSWD	PS (RUB)	PS (TVB)	PT	SF	SFD	TU1	TU2	TV	VS	VSEC	
page	3-33	3-34	3-8	3-34	3-15	3-7	3-28	3-12	3-31	3-9	3-20	3-10	3-24	3-25	

Clock, VPS, Buzzer (CVB) - Recorder Unit Board (RUB)

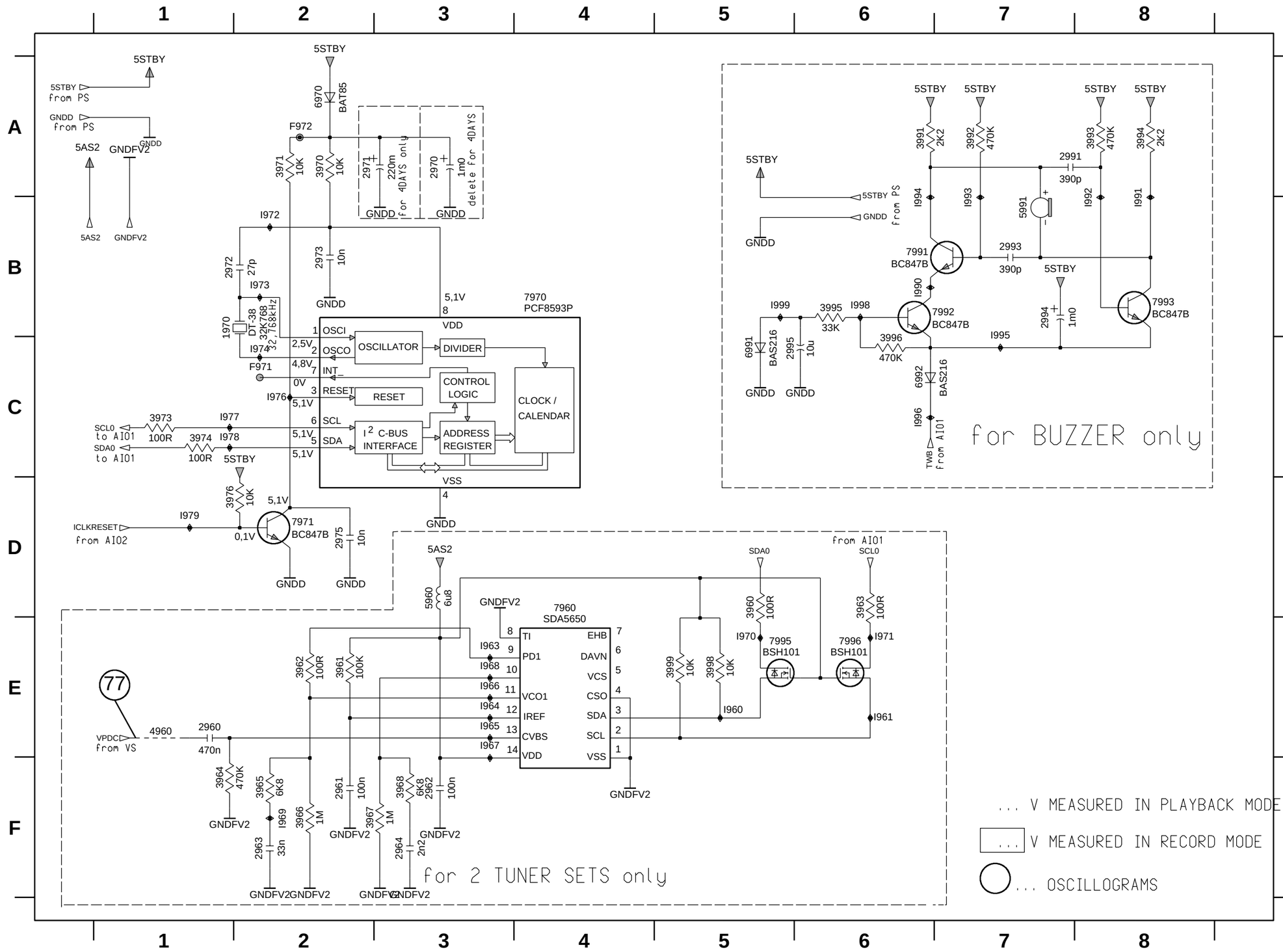

Interconnections															
Circuit	ACO	AF	AF2	AIO1	AIO2	AL	AMP	AP	COTV	CVB	DE	DOSCD	HA	HPAV	IO_1
page	3-29	3-22	3-30	3-16	3-17	3-23	3-13	3-21	3-14	3-19	3-18	3-32	3-26	3-27	3-11
Circuit	KB1D	KB2D	LS	MFSWD	PS (RUB)	PS (TVB)	PT	SF	SFD	TU1	TU2	TV	VS	VSEC	
page	3-33	3-34	3-8	3-34	3-15	3-7	3-28	3-12	3-31	3-9	3-20	3-10	3-24	3-25	

1970 B1 I995 B7
2960 E1 I996 C6
2961 F2 I998 B6
2962 F3 I999 B5
2963 F2
2964 F3
2970 A3
2971 A2
2972 B1
2973 B2
2975 D2
2991 A7
2993 B7
2994 B7
2995 C5
3960 D5
3961 E2
3962 E2
3963 D6
3964 F1
3965 F2
3966 F2
3967 F2
3968 F3
3970 A2
3971 A2
3973 C1
3974 C1
3976 D1
3991 A6
3992 A7
3993 A8
3994 A8
3995 B6
3996 C6
3998 E5
3999 E5
4960 E1
5960 D3
5991 B7
6970 A2
6991 C5
6992 C6
7960 D4
7970 B4
7971 D2
7991 B6
7992 B6
7993 B8
7995 E5
7996 E6
F971 C2
F972 A2
I960 E5
I961 E6
I963 E3
I964 E3
I965 E3
I966 E3
I967 E3
I968 E3
I969 F2
I970 E5
I971 E6
I972 B2
I973 B2
I974 C2
I976 C2
I977 C1
I978 C1
I979 D1
I990 B6
I991 B8
I992 B8
I993 B7
I994 B6

3-20

Tuner 2 (TU2) - Recorder Unit Board (RUB)

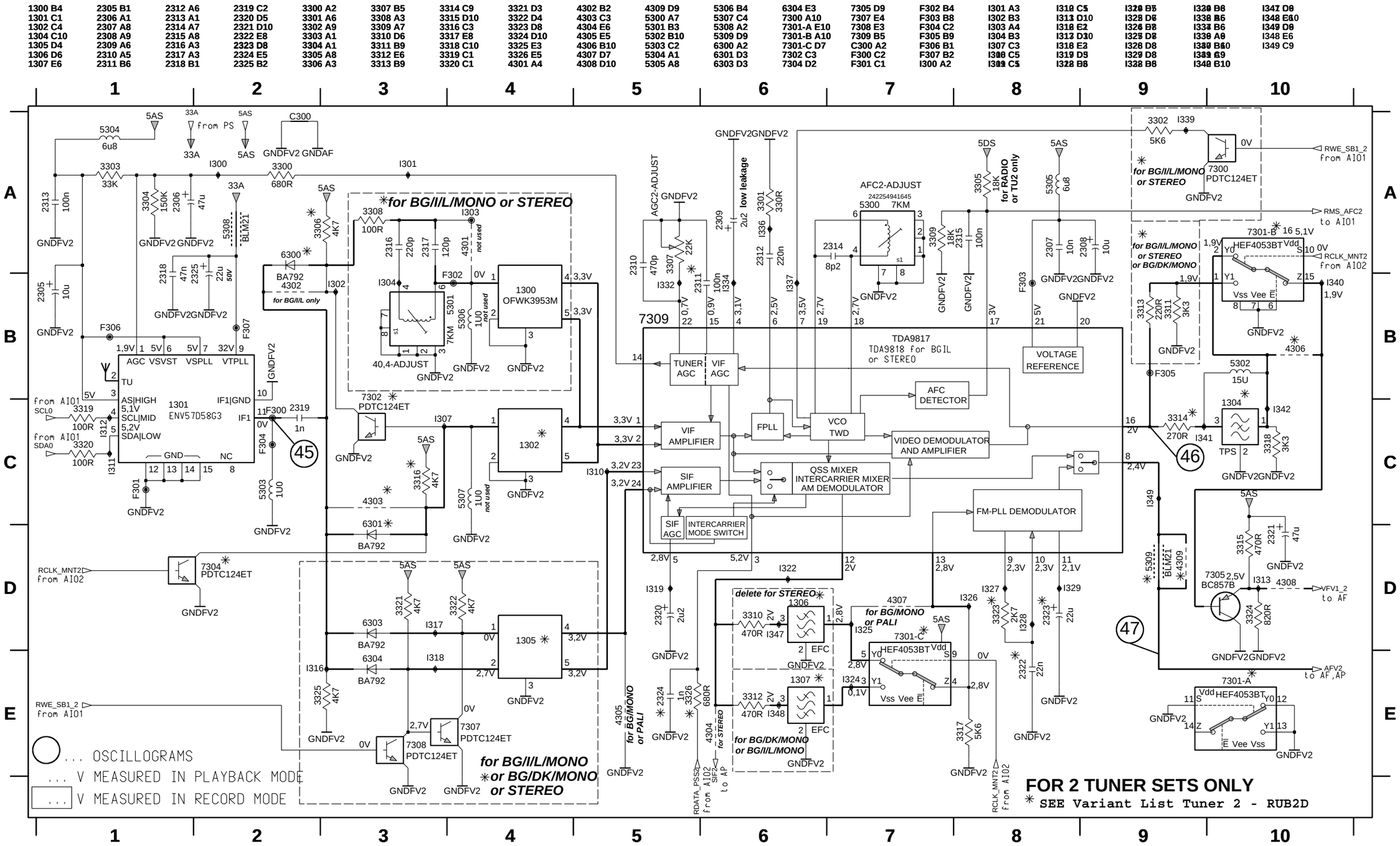

Interconnections															
Circuit	ACO	AF	AF2	AIO1	AIO2	AL	AMP	AP	COTV	CVB	DE	DOSCD	HA	HPAV	IO_1
page	3-29	3-22	3-30	3-16	3-17	3-23	3-13	3-21	3-14	3-19	3-18	3-32	3-26	3-27	3-11
Circuit	KB1D	KB2D	LS	MFSWD	PS (RUB)	PS (TVB)	PT	SF	SFD	TU1	TU2	TV	VS	VSEC	
page	3-33	3-34	3-8	3-34	3-15	3-7	3-28	3-12	3-31	3-9	3-20	3-10	3-24	3-25	

Sound Processing (AP) - Recorder Unit Board (RUB)

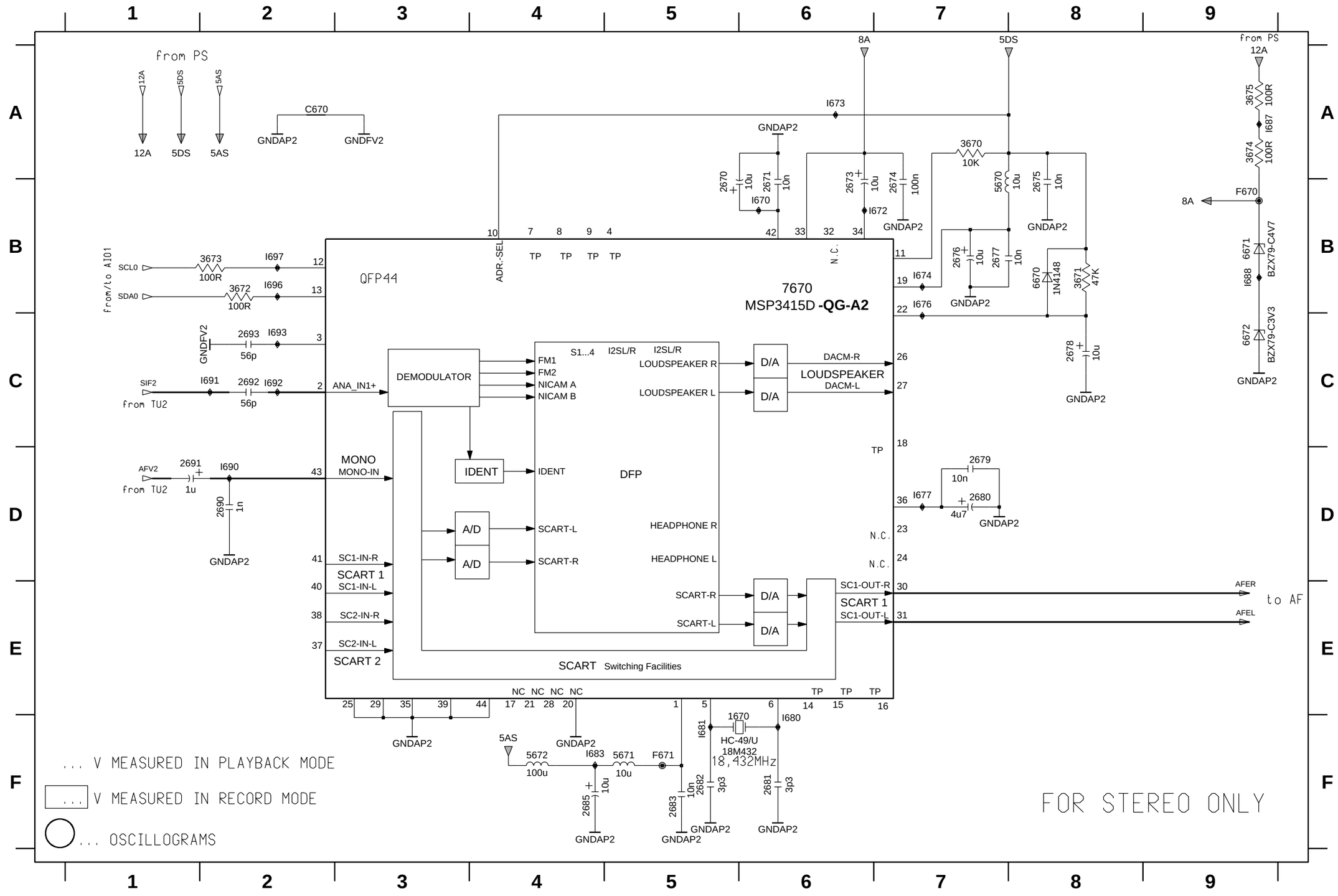

1670 F5
2670 B5
2671 B6
2673 B6
2674 B7
2675 B8
2676 B7
2677 B7
2678 C8
2679 D7
2680 D7
2681 F6
2682 F5
2683 F5
2685 F4
2690 D2
2691 D1
2692 C2
2693 C2
3670 A7
3671 B8
3672 B2
3673 B2
3674 A9
3675 A9
5670 B7
5671 F5
5672 F4
6670 B8
6671 B9
6672 C9
7670 B6
C670 A2
F670 B9
F671 F5
I670 B6
I672 B7
I673 A6
I674 B7
I676 B7
I677 D7
I680 F6
I681 F5
I683 F4
I687 A9
I688 B9
I690 D2
I691 C2
I692 C2
I693 C2
I696 B2
I697 B2

Interconnections															
Circuit	ACO	AF	AF2	AIO1	AIO2	AL	AMP	AP	COTV	CVB	DE	DOSCD	HA	HPAV	IO_1
page	3-29	3-22	3-30	3-16	3-17	3-23	3-13	3-21	3-14	3-19	3-18	3-32	3-26	3-27	3-11
Circuit	KB1D	KB2D	LS	MFSWD	PS (RUB)	PS (TVB)	PT	SF	SFD	TU1	TU2	TV	VS	VSEC	
page	3-33	3-34	3-8	3-34	3-15	3-7	3-28	3-12	3-31	3-9	3-20	3-10	3-24	3-25	

3-22

FM-Audio Processing (AF) - Recorder Unit Board (RUB)

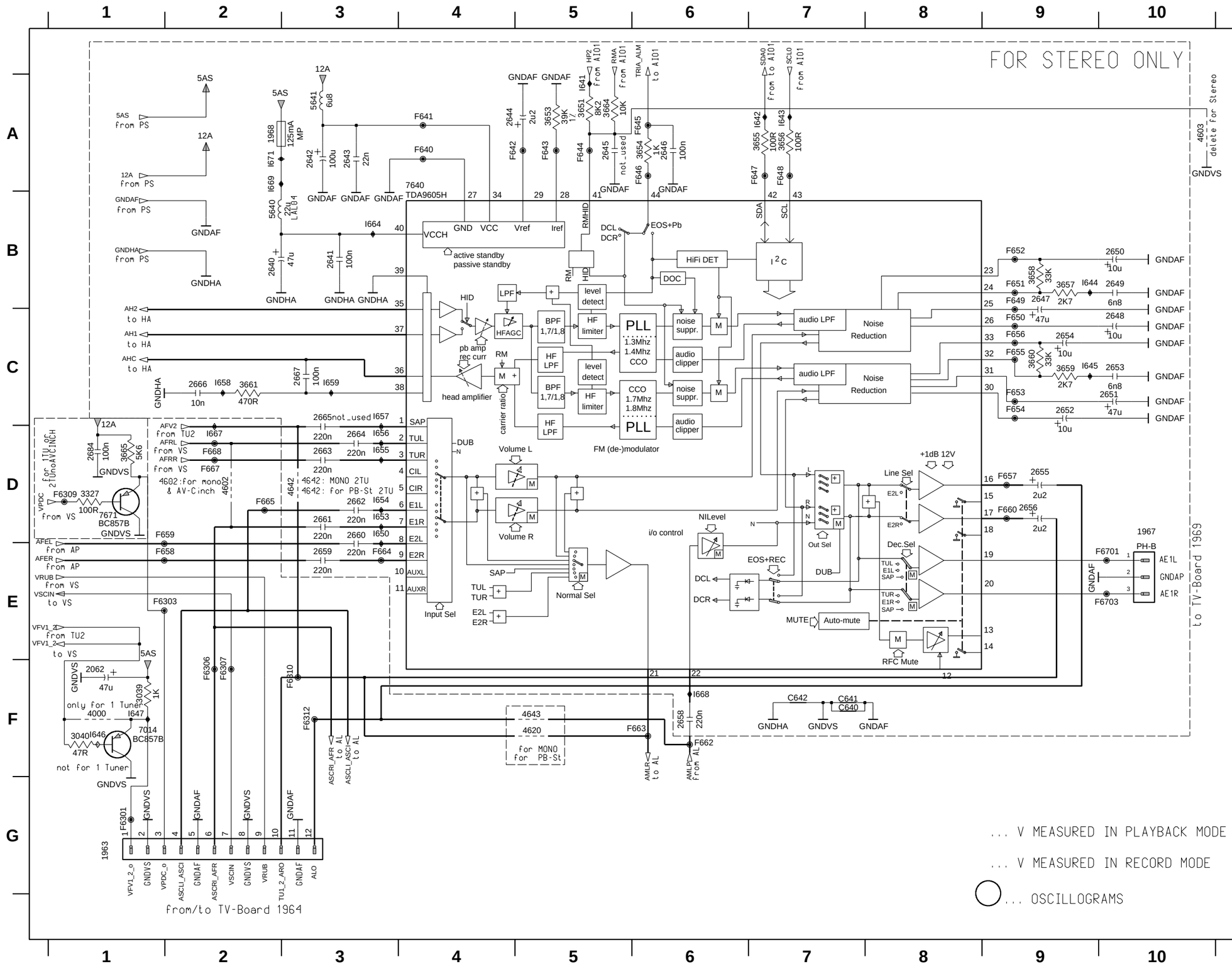

1963 G1
1967 D10
1968 A2
2062 F1
2640 B2
2641 B3
2642 A3
2643 A3
2644 A4
2645 A5
2646 A6
2647 B9
2648 C10
2649 B10
2650 B10
2651 C10
2652 C9
2653 C10
2654 C9
2655 D9
2656 D9
2658 F6
2659 E3
2660 D3
2661 D3
2662 D3
2663 D3
2664 D3
2665 C3
2666 C2
2667 C3
2684 D1
3039 F1
3040 F1
3327 D1
3651 A5
3653 A5
3654 A6
3655 A7
3656 A7
3657 B9
3658 B9
3659 C9
3660 C9
3661 C2
3664 A5
3665 D1
4000 F1
4602 D2
4603 A10
4620 F5
4642 D3
4643 F5
5640 B2
5641 A3
7014 F1
7640 A4
7671 D1
C640 F7
C641 F7
C642 F7
F6301 G1
F6303 E2
F6306 F2
F6307 F2
F6309 D1
F6310 F3
F6312 F3
F640 A4
F641 A4
F642 A4
F643 A5
F644 A5
F645 A6
F646 A6
F647 A7
F648 A7
F649 B9
F650 C9
F651 B9
F652 B9
F653 C9
F654 C9
F655 C9
F656 C9
F657 D9
F658 E2
F659 D2
F660 D9
F662 F6
F663 F6
F664 E3
F665 D2
F667 D2
F668 D2
F6701 E10
F6703 E10
I641 A5
I642 A7
I643 A7
I644 B9
I645 C9
I646 F1
I647 F1
I650 D3
I653 D3
I654 D3
I655 D3
I656 D3
I657 C3
I658 C2
I659 C3
I664 B3
I667 D2
I668 F6
I669 A2
I671 A2

Interconnections	
Circuit	page
ACO	3-29
AF	3-22
AF2	3-30
AIO1	3-16
AIO2	3-17
AL	3-23
AMP	3-13
AP	3-21
COTV	3-14
CVB	3-19
DE	3-18
DOSCD	3-32
HA	3-26
HPAV	3-27
IO_1	3-11
KB1D	3-33
KB2D	3-34
LS	3-8
MFSWD	3-34
PS (RUB)	3-15
PS (TVB)	3-7
PT	3-28
SF	3-12
SFD	3-31
TU1	3-9
TU2	3-20
TV	3-10
VS	3-24
VSEC	3-25

Linear Audio Processing (AL) - Recorder Unit Board (RUB)

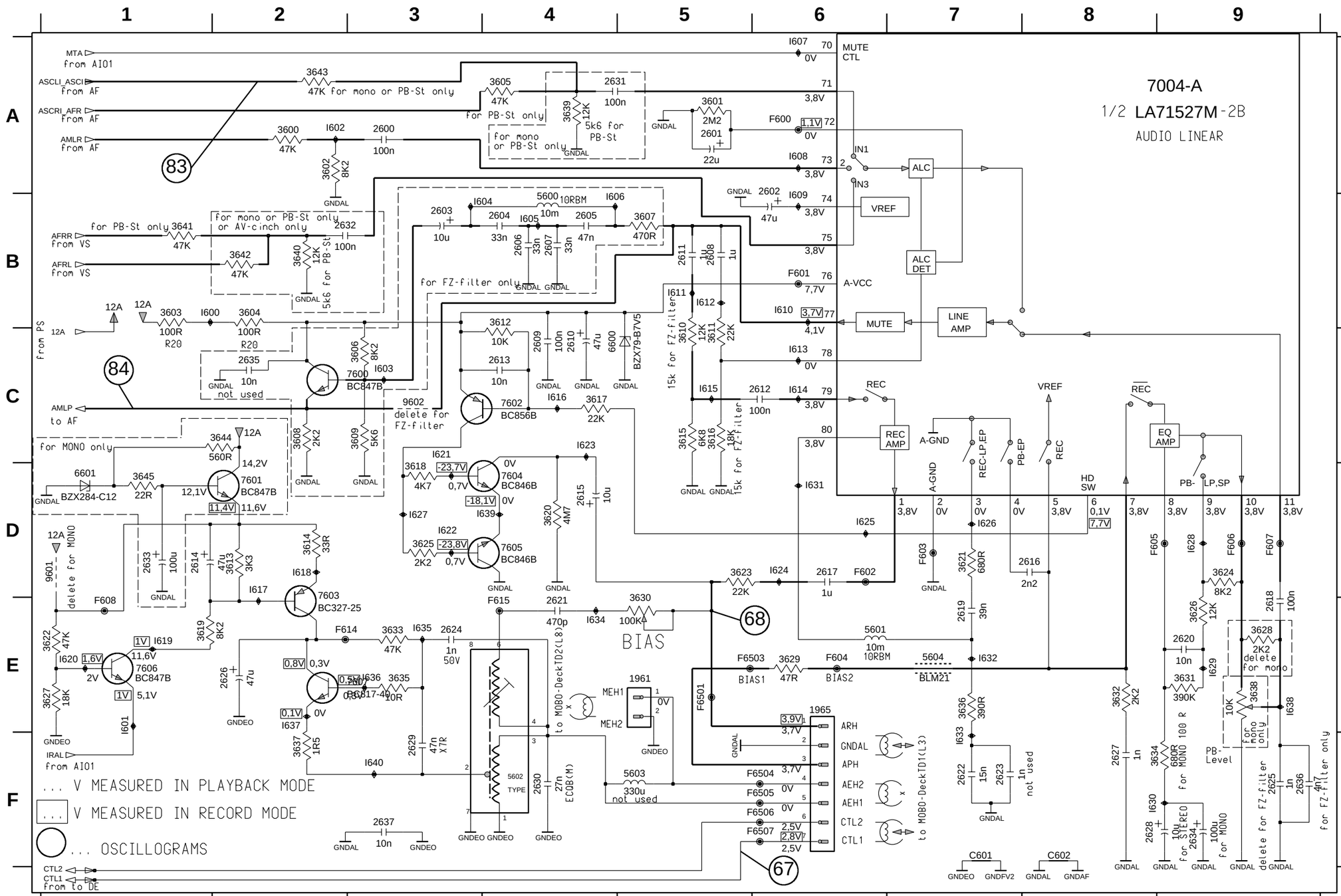

1961	E5	5602	F4
1965	E6	5603	F5
2600	A3	5604	E7
2601	A5	6600	C4
2602	B6	6601	D1
2603	B3	7004-A	A8
2604	B4	7600	C2
2605	B4	7601	D2
2606	B4	7602	C4
2607	B4	7603	E2
2608	B5	7604	D4
2609	C4	7605	D4
2610	C4	7606	E1
2611	B5	7607	E2
2612	C6	9601	D1
2613	C4	9602	C3
2614	D1	C601	F7
2615	D4	C602	F8
2616	D8	F600	A6
2617	D6	F601	B6
2618	E9	F602	D6
2619	E7	F603	D7
2620	E9	F604	E6
2621	E4	F605	D9
2622	F7	F606	D9
2623	F7	F607	D9
2624	E3	F608	E1
2625	F9	F614	E2
2626	E2	F615	E4
2627	F8	F6501	E5
2628	F8	F6503	E5
2629	F3	F6504	F6
2630	F4	F6505	F6
2631	A4	F6506	F6
2632	B2	F6507	F6
2633	D1	I600	B1
2634	F9	I601	E1
2635	C2	I602	A2
2636	F9	I603	C3
2637	F3	I604	B4
3600	A2	I605	B4
3601	A5	I606	B4
3602	A2	I607	A6
3603	B1	I608	A6
3604	B2	I609	B6
3605	A4	I610	B6
3606	C3	I611	B5
3607	B5	I612	B5
3608	C2	I613	C6
3609	C3	I614	C6
3610	C5	I615	C5
3611	C5	I616	C4
3612	B4	I617	D2
3613	D2	I618	D2
3614	D2	I619	E1
3615	C5	I620	E1
3616	C5	I621	C3
3617	C4	I622	D3
3618	D3	I623	C4
3619	E1	I624	D6
3620	D4	I625	D6
3621	D7	I626	D7
3622	E1	I627	D3
3623	D5	I628	D9
3624	D9	I629	E9
3625	D3	I630	F8
3626	E9	I631	D6
3627	E1	I632	E7
3628	E9	I633	F7
3629	E6	I634	E4
3630	D5	I635	E3
3631	E9	I636	E3
3632	E8	I637	E2
3633	E3	I638	E9
3634	F9	I639	D4
3635	E3	I640	F3
3636	E7		
3637	F2		
3638	E9		
3639	A4		
3640	B2		
3641	B1		
3642	B2		
3643	A2		
3644	C2		
3645	D1		
5600	B4		
5601	E6		

Interconnections

Circuit	ACO	AF	AF2	AIO1	AIO2	AL	AMP	AP	COTV	CVB	DE	DOSCD	HA	HPAV	IO_1
page	3-29	3-22	3-30	3-16	3-17	3-23	3-13	3-21	3-14	3-19	3-18	3-32	3-26	3-27	3-11
Circuit	KB1D	KB2D	LS	MFSWD	PS (RUB)	PS (TVB)	PT	SF	SFD	TU1	TU2	TV	VS	VSEC	
page	3-33	3-34	3-8	3-34	3-15	3-7	3-28	3-12	3-31	3-9	3-20	3-10	3-24	3-25	

3-24

Video Signal Processing (VS) - Recorder Unit Board (RUB)

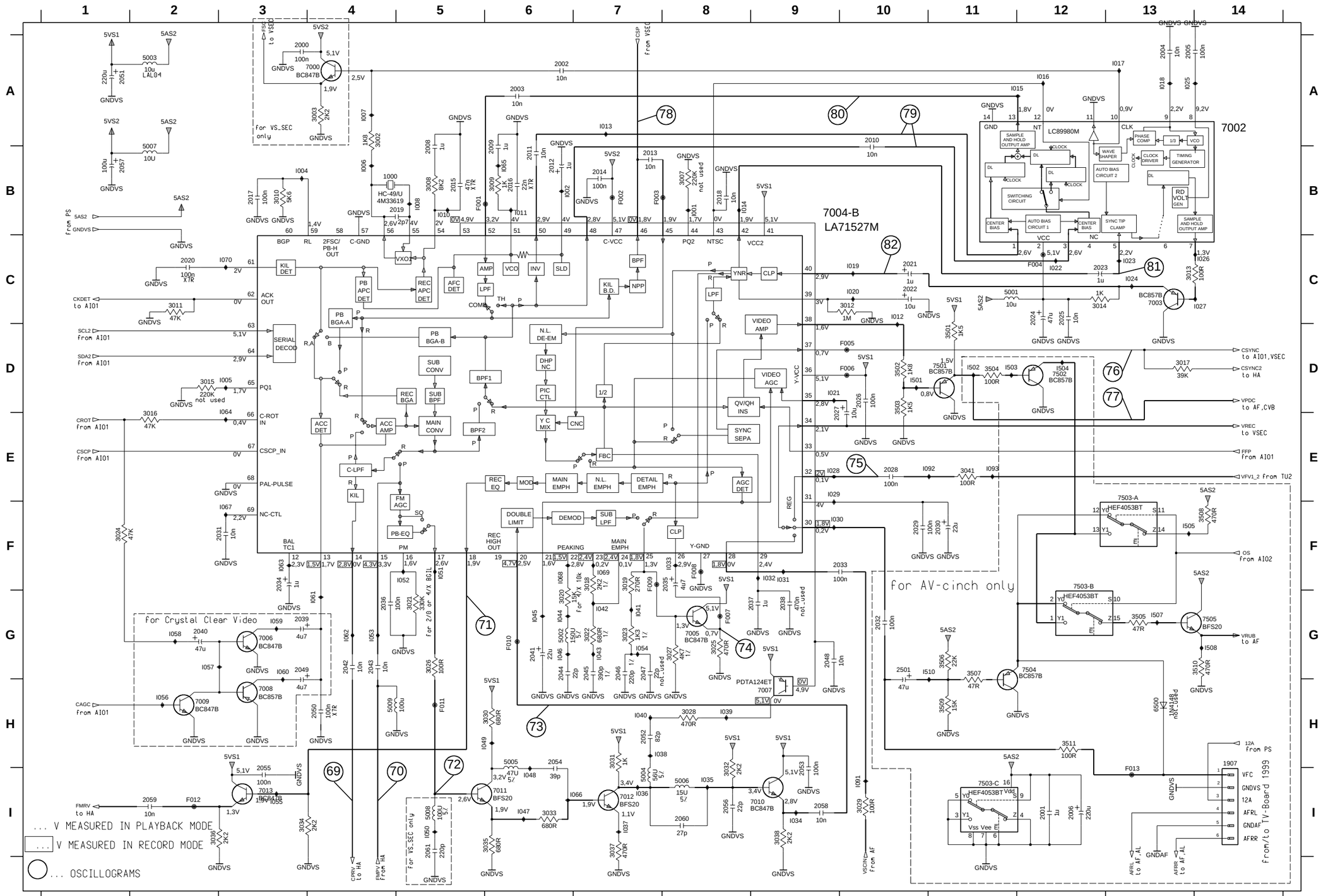

Interconnections														
Circuit	ACO	AF	AF2	AIO1	AIO2	AL	AMP	AP	COTV	CVB	DE	DOSCD	HA	HPAV	IO_1
page	3-29	3-22	3-30	3-16	3-17	3-23	3-13	3-21	3-14	3-19	3-18	3-32	3-26	3-27	3-11
Circuit	KB1D	KB2D	LS	MFSWD	PS (RUB)	PS (TVB)	PT	SF	SFD	TU1	TU2	TV	VS	VSEC	
page	3-33	3-34	3-8	3-34	3-15	3-7	3-28	3-12	3-31	3-9	3-20	3-10	3-24	3-25	

1000 B4
1907 H14
2000 A3
2001 I12
2002 A6
2003 A6
2004 A13
2005 A13
2006 I12
2008 B5
2009 B6
2010 A10
2011 B6
2012 B6
2013 B7
2014 B7
2015 B5
2016 B6
2017 B3
2018 B8
2019 B5
2020 C2
2021 C10
2022 C10
2023 C12
2024 C12
2025 C12
2026 D10
2027 E9
2028 E10
2029 F10
2030 F11
2031 F3
2032 G10
2033 F10
2034 F3
2035 F8
2036 G4
2037 G9
2038 G9
2039 G3
2040 G2
2041 G6
2042 G4
2043 G4
2044 G6
2045 G7
2046 G7
2047 G7
2048 G9
2049 G3
2050 H4
2051 A1
2052 H7
2053 I9
2054 H6
2055 I3
2056 I8
2057 B1
2058 I9
2059 I2
2060 I8
2061 I5
2501 G10
3002 A4
3003 A4
3007 B8
3008 B5
3009 B6
3010 B3
3011 C2
3012 C10
3013 C13
3014 C12
3015 D2
3016 E2
3017 D13
3018 F7
3019 F7
3020 G6
3021 G5
3022 G7
3023 G7
3024 G2
3025 G8
3026 G5
3027 G8
3028 H8
3029 I10
3030 H6
3031 H7
3032 I8
3033 I6
3034 I3
3035 I6
3036 I2
3037 I7
3038 I9
3041 E11
3501 D11
3502 D10
3503 D10
3504 D11
3505 G13
3506 G11
3507 G11
3508 F14
3509 H11
3510 G14
3511 H12
5001 C11
5002 G6
5003 A2
5004 I7
5005 H6
5006 I8
5007 B2
5008 I5
5009 H4
6500 H13
7000 A4
7002 A14
7003 C13
7004-B B9
7005 G8
7006 G3
7007 H9
7008 H3
7009 H2
7010 I8
7011 I6
7012 I7
7013 I3
7501 D11
7502 D12
7503-A E13
7503-B F12
7503-C I11
7504 G12
7505 G14
F001 B5
F002 B7
F003 B7
F004 C12
F005 D10
F006 D10
F007 G8
F008 F8
F009 F7
F010 G6
F011 H5
F012 I2
F013 I13
I001 B8
I002 B6
I004 B3
I005 D3
I006 B4
I007 A4
I008 B5
I010 B5
I011 B6
I012 C10
I013 A7
I014 B8
I015 A12
I016 A12
I017 A13
I018 A13
I019 C10
I020 C10
I021 D9
I022 C12
I023 C13
I024 C13
I025 A13
I026 C14
I027 C14
I028 E9
I029 E9
I030 F9
I031 F9
I032 F9
I033 F8
I034 I9
I035 I8
I036 I7
I037 I7
I038 H7
I039 H8
I040 H7
I041 G7
I042 G7
I043 G7
I044 G6
I045 G6
I046 G6
I047 I6
I048 I6
I049 H5
I050 I5
I051 F5
I052 F5
I053 G4
I054 G7
I055 I3
I056 H2
I057 G2
I058 G2
I059 G3
I060 G3
I061 G4
I062 G4
I063 F3
I064 G6
I065 B6
I066 I7
I067 F3
I068 F6
I069 F7
I070 C3
I091 I10
I092 E11
I093 E11
I501 D10
I502 D11
I503 D11
I504 D12
I505 F13
I507 G13
I508 G14
I510 G11

SECAM Processing (VSEC) - Recorder Unit Board (RUB)

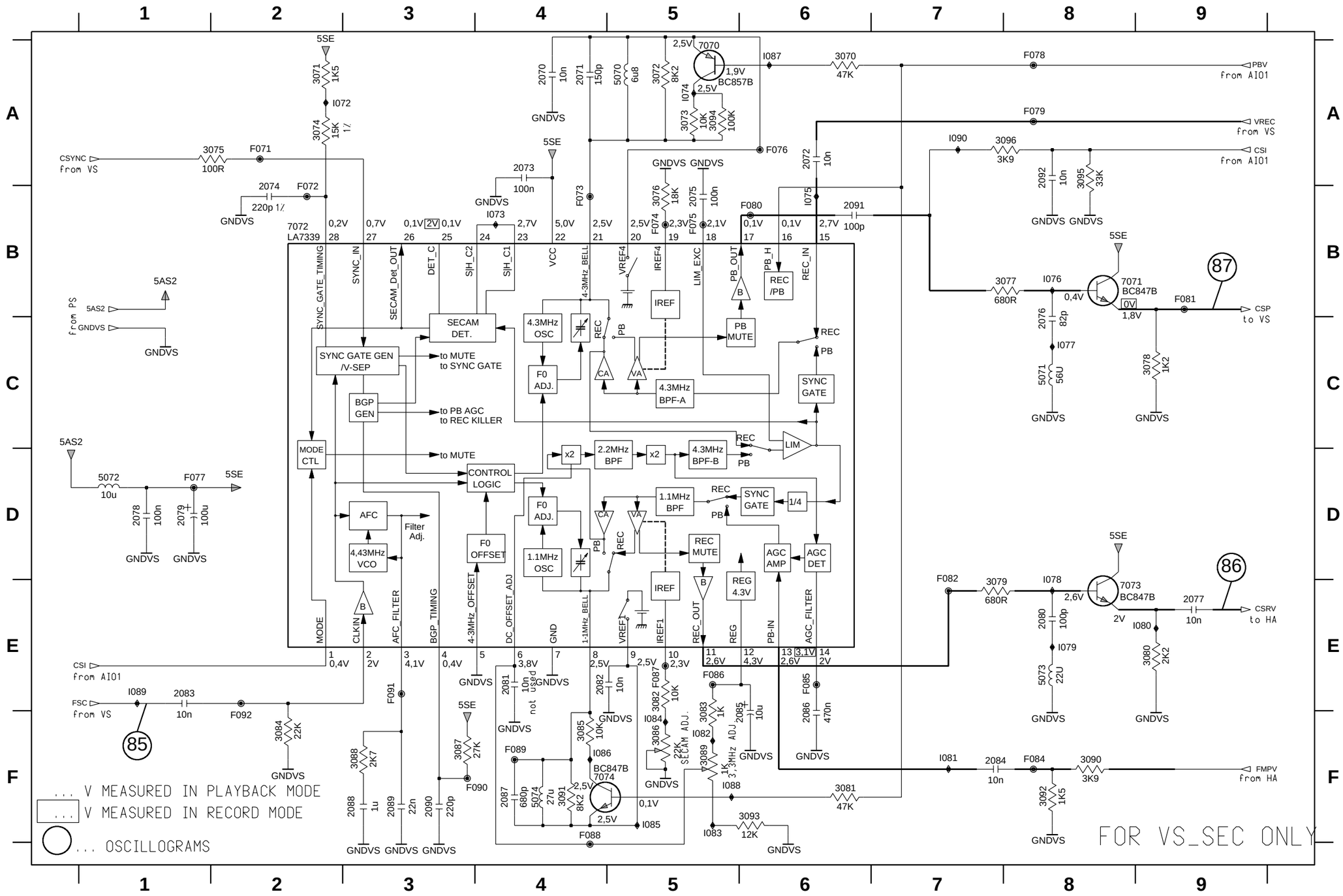

	Interconnections														
Circuit	ACO	AF	AF2	AIO1	AIO2	AL	AMP	AP	COTV	CVB	DE	DOSCD	HA	HPAV	IO_1
page	3-29	3-22	3-30	3-16	3-17	3-23	3-13	3-21	3-14	3-19	3-18	3-32	3-26	3-27	3-11
Circuit	KB1D	KB2D	LS	MFSWD	PS (RUB)	PS (TVB)	PT	SF	SFD	TU1	TU2	TV	VS	VSEC	
page	3-33	3-34	3-8	3-34	3-15	3-7	3-28	3-12	3-31	3-9	3-20	3-10	3-24	3-25	

2070 A4 I078 D8
2071 A4 I079 E8
2072 A6 I080 E9
2073 A4 I081 F7
2074 B2 I082 F5
2075 B5 I083 F5
2076 C8 I084 F5
2077 E9 I085 F5
2078 D1 I086 F4
2079 D1 I087 A6
2080 E8 I088 F5
2081 E4 I089 E1
2082 E4 I090 A7
2083 E1
2084 F7
2085 F6
2086 F6
2087 F4
2088 F3
2089 F3
2090 F3
2091 B6
2092 A8
3070 A6
3071 A2
3072 A5
3073 A5
3074 A2
3075 A2
3076 B5
3077 B8
3078 C9
3079 E7
3080 E9
3081 F6
3082 E5
3083 F5
3084 F2
3085 F4
3086 F5
3087 F3
3088 F3
3089 F5
3090 F8
3091 F4
3092 F8
3093 F6
3094 A5
3095 A8
3096 A8
5070 A5
5071 C8
5072 D1
5073 E8
5074 F4
7070 A5
7071 B8
7072 B2
7073 E8
7074 F5
F071 A2
F072 B2
F073 B4
F074 B5
F075 B5
F076 A6
F077 D1
F078 A8
F079 A8
F080 B6
F081 B9
F082 D7
F084 F8
F085 E6
F086 E5
F087 E5
F088 F4
F089 F4
F090 F4
F091 E3
F092 F2
I072 A2
I073 B4
I074 A5
I075 B6
I076 B8
I077 C8

3-26

Head Amplifier (HA) - Recorder Unit Board (RUB)

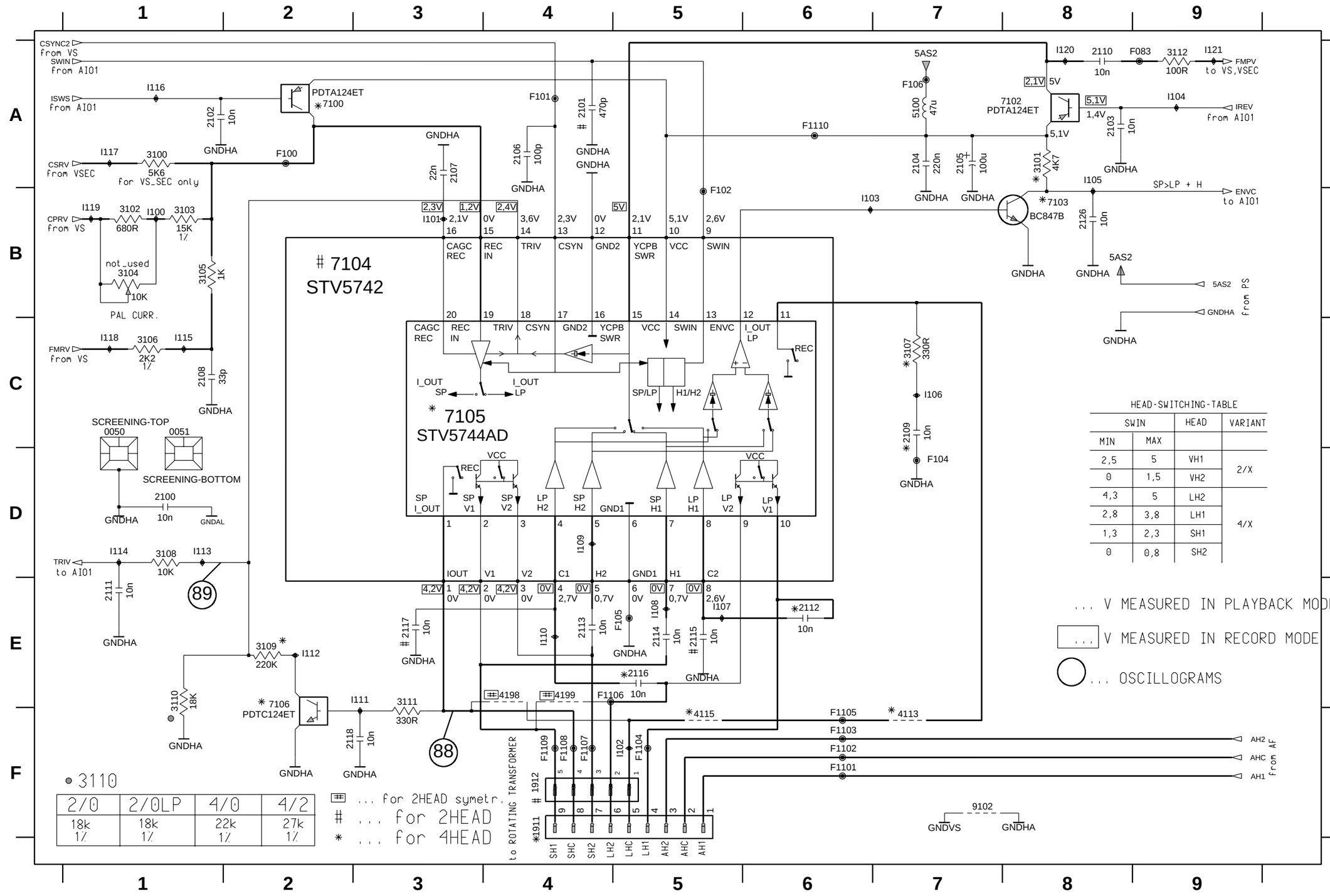

Interconnections															
Circuit	ACO	AF	AF2	AIO1	AIO2	AL	AMP	AP	COTV	CVB	DE	DOSCD	HA	HPAV	IO_1
page	3-29	3-22	3-30	3-16	3-17	3-23	3-13	3-21	3-14	3-19	3-18	3-32	3-26	3-27	3-11
Circuit	KB1D	KB2D	LS	MFSWD	PS (RUB)	PS (TVB)	PT	SF	SFD	TU1	TU2	TV	VS	VSEC	
page	3-33	3-34	3-8	3-34	3-15	3-7	3-28	3-12	3-31	3-9	3-20	3-10	3-24	3-25	

0050 C1
0051 C1
1911 F4
1912 F4
2100 D1
2101 A4
2102 A1
2103 A8
2104 A7
2105 A7
2106 A4
2107 A3
2108 C1
2109 C7
2110 A8
2111 E1
2112 E6
2113 E4
2114 E5
2115 E5
2116 E5
2117 E3
2118 F2
2126 B8
3100 A1
3101 A8
3102 B1
3103 B1
3104 B1
3105 B1
3106 C1
3107 C7
3108 D1
3109 E2
3110 E1
3111 E3
3112 A9
4113 F7
4115 F5
4198 E4
4199 E4
5100 A7
7100 A2
7102 A8
7103 B8
7104 B2
7105 C3
7106 E2
9102 F7
F083 A9
F100 A2
F101 A4
F102 B5
F104 D7
F105 E5
F106 A7
F1101 F6
F1102 F6
F1103 F6
F1104 F5
F1105 F6
F1106 E4
F1107 F4
F1108 F4
F1109 F4
F1110 A6
I100 B1
I101 B3
I102 F5
I103 B6
I104 A9
I105 A8
I106 C7
I107 E5
I108 E5
I109 D4
I110 E4
I111 E3
I112 E2
I113 D1
I114 D1
I115 C1
I116 A1
I117 A1
I118 C1
I119 B1
I120 A8
I121 A9

Headphone, Front-AV Board (HPAV)

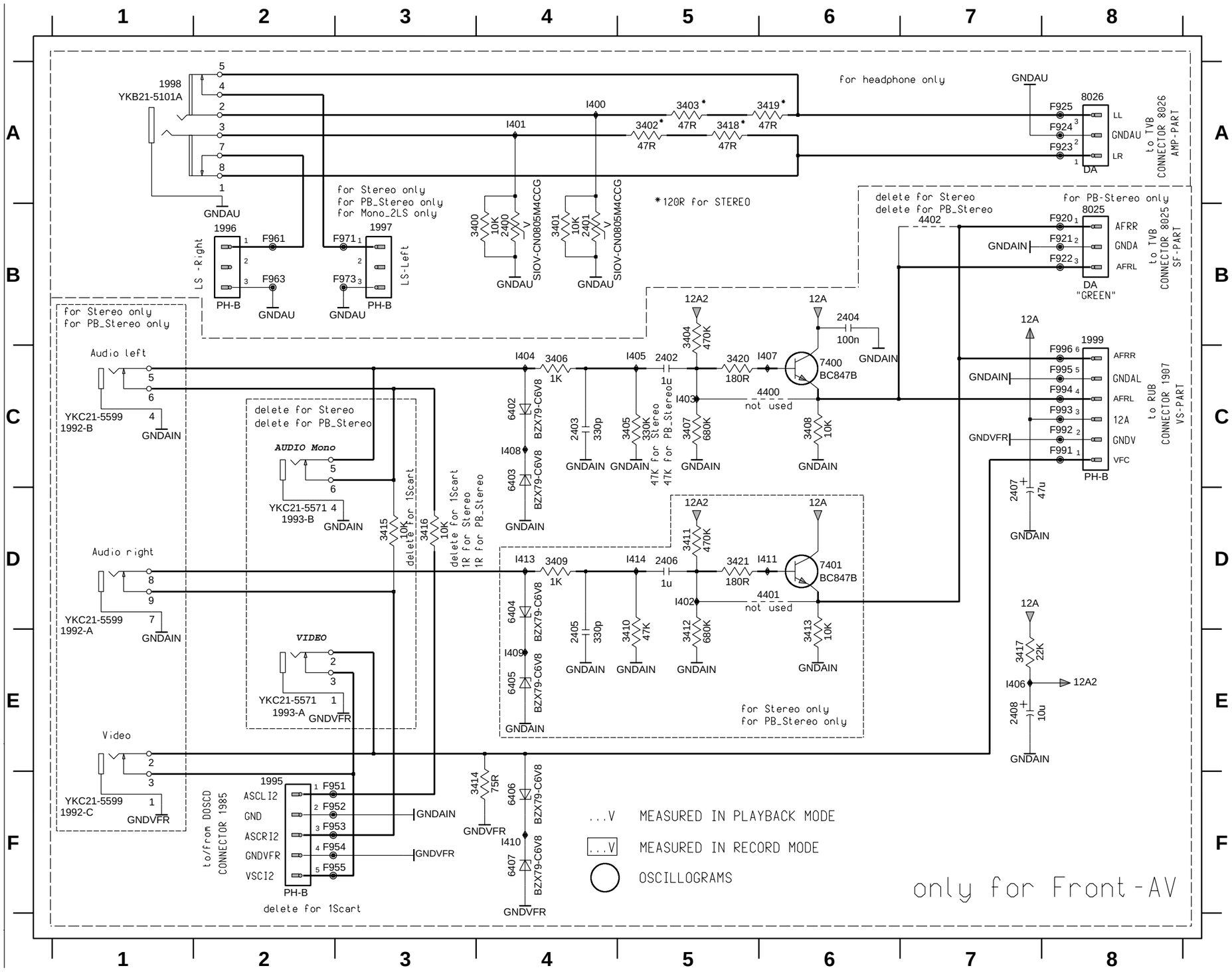

Interconnections															
Circuit	ACO	AF	AF2	AIO1	AIO2	AL	AMP	AP	COTV	CVB	DE	DOSCD	HA	HPAV	IO_1
page	3-29	3-22	3-30	3-16	3-17	3-23	3-13	3-21	3-14	3-19	3-18	3-32	3-26	3-27	3-11
Circuit	KB1D	KB2D	LS	MFSWD	PS (RUB)	PS (TVB)	PT	SF	SFD	TU1	TU2	TV	VS	VSEC	
page	3-33	3-34	3-8	3-34	3-15	3-7	3-28	3-12	3-31	3-9	3-20	3-10	3-24	3-25	

1992-A D1
1992-B C1
1992-C F1
1993-A E2
1993-B D2
1995 F2
1996 B2
1997 B3
1998 A1
1999 B8
2400 B4
2401 B4
2402 C5
2403 C4
2404 B6
2405 E4
2406 D5
2407 D7
2408 E7
3400 B4
3401 B4
3402 A5
3403 A5
3404 B5
3405 C5
3406 C4
3407 C5
3408 C6
3409 D4
3410 E5
3411 D5
3412 E5
3413 E6
3414 F4
3415 D3
3416 D3
3417 E7
3418 A5
3419 A6
3420 C5
3421 D5
4400 C6
4401 D6
4402 B7
6402 C4
6403 C4
6404 D4
6405 E4
6406 F4
6407 F4
7400 C6
7401 D6
8025 B8
8026 A8
F920 B8
F921 B8
F922 B8
F923 A8
F924 A8
F925 A8
F951 F2
F952 F2
F953 F2
F954 F2
F955 F2
F961 B2
F963 B2
F971 B3
F973 B3
F991 C8
F992 C8
F993 C8
F994 C8
F995 C8
F996 C8
I400 A4
I401 A4
I402 D5
I403 C5
I404 C4
I405 C5
I406 E7
I407 C6
I408 C4
I409 E4
I410 F4
I411 D6
I413 D4
I414 D5

3-28

CRT-Board (PT)

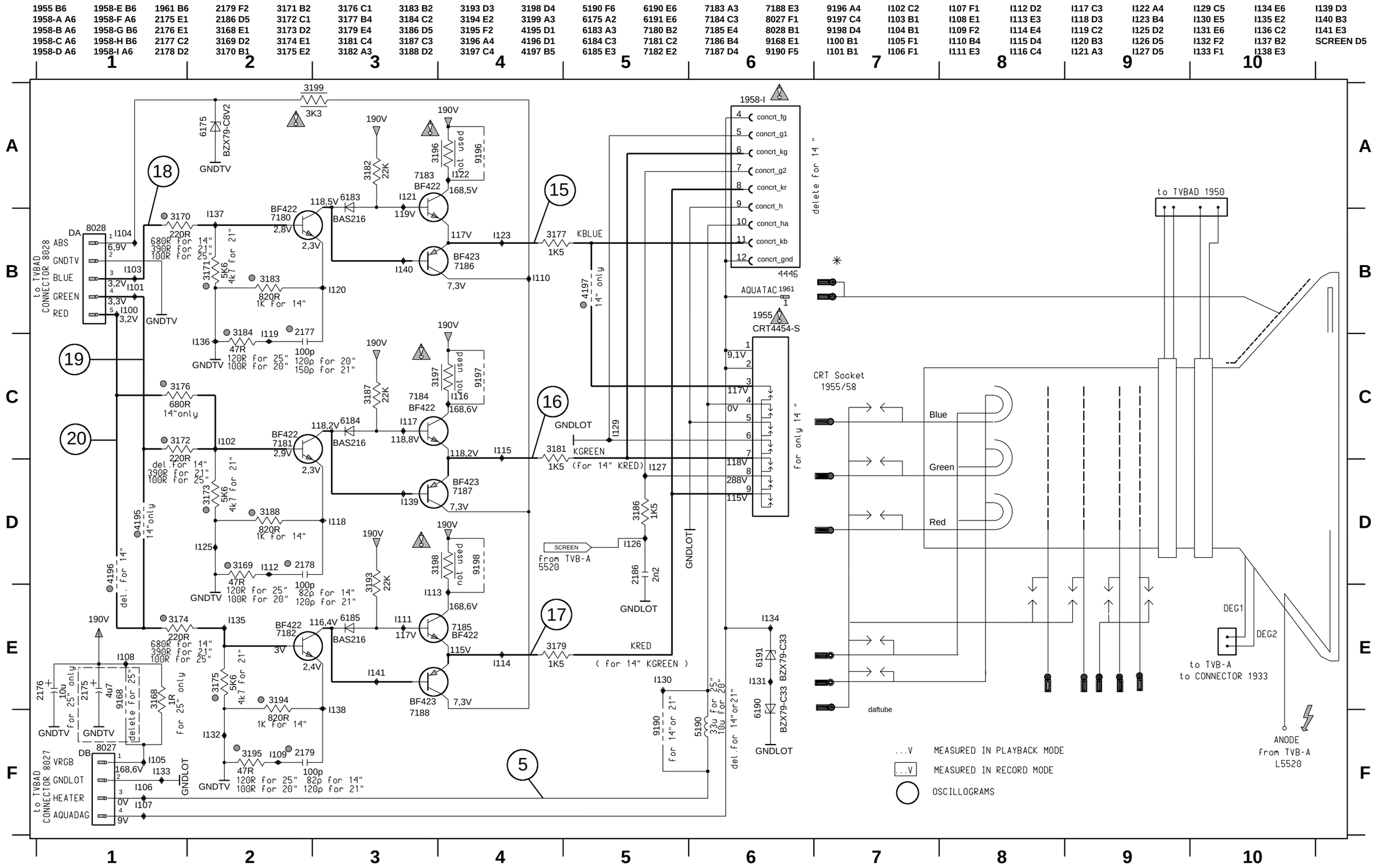

Interconnections															
Circuit	ACO	AF	AF2	AIO1	AIO2	AL	AMP	AP	COTV	CVB	DE	DOSCD	HA	HPAV	IO_1
page	3-29	3-22	3-30	3-16	3-17	3-23	3-13	3-21	3-14	3-19	3-18	3-32	3-26	3-27	3-11
Circuit	KB1D	KB2D	LS	MFSWD	PS (RUB)	PS (TVB)	PT	SF	SFD	TU1	TU2	TV	VS	VSEC	
page	3-33	3-34	3-8	3-34	3-15	3-7	3-28	3-12	3-31	3-9	3-20	3-10	3-24	3-25	

Pre Amplifier (ACO) - Audio Board (APDOD)

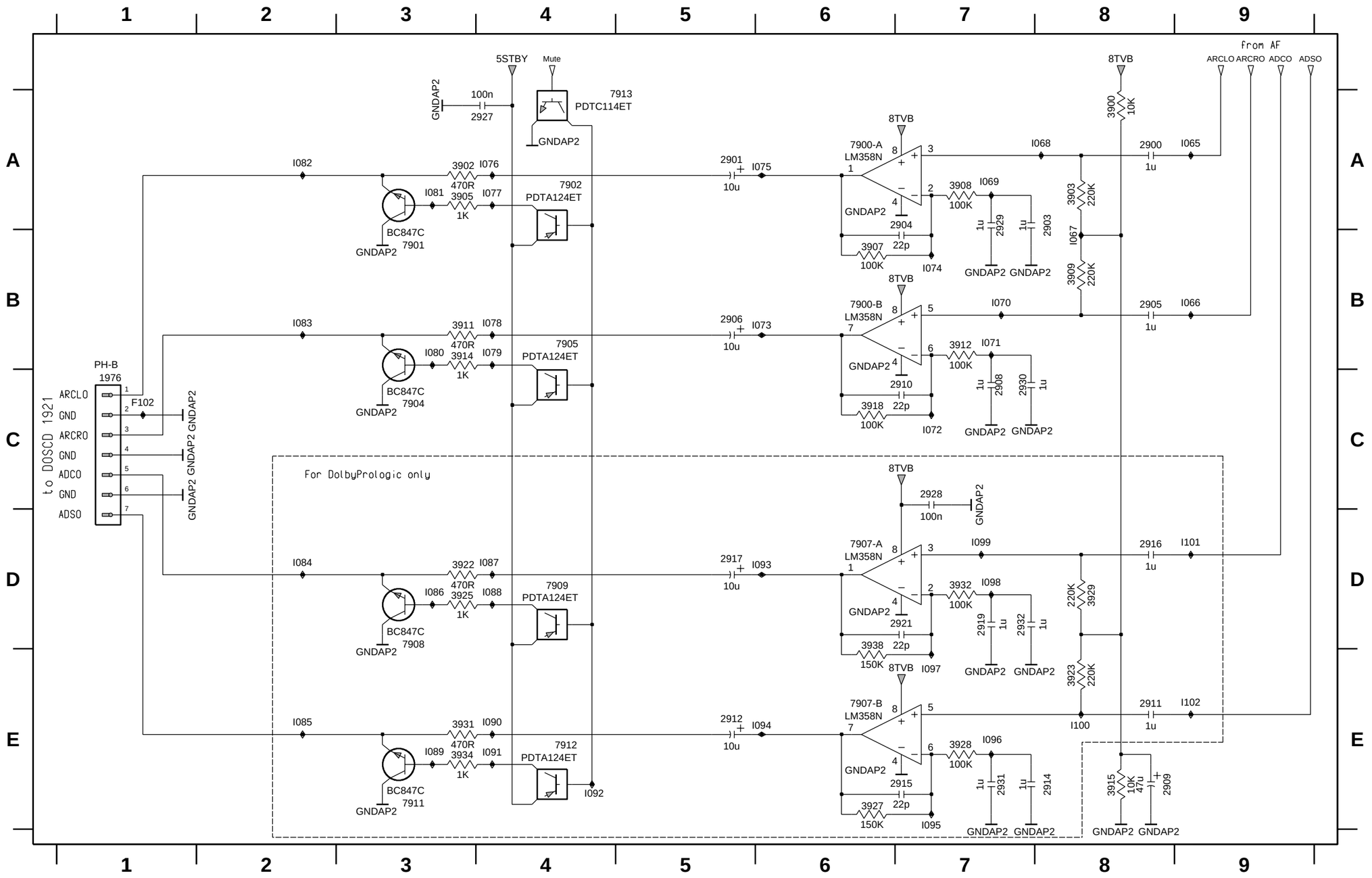

Interconnections															
Circuit	ACO	AF	AF2	AIO1	AIO2	AL	AMP	AP	COTV	CVB	DE	DOSCD	HA	HPAV	IO_1
page	3-29	3-22	3-30	3-16	3-17	3-23	3-13	3-21	3-14	3-19	3-18	3-32	3-26	3-27	3-11
Circuit	KB1D	KB2D	LS	MFSWD	PS (RUB)	PS (TVB)	PT	SF	SFD	TU1	TU2	TV	VS	VSEC	
page	3-33	3-34	3-8	3-34	3-15	3-7	3-28	3-12	3-31	3-9	3-20	3-10	3-24	3-25	

1976 C1
2900 A8
2901 A5
2903 A7
2904 B7
2905 B8
2906 B5
2908 C7
2909 E8
2910 C7
2911 E8
2912 E5
2914 E7
2915 E7
2916 D8
2917 D5
2919 D7
2921 D7
2927 A4
2928 C7
2929 A7
2930 C7
2931 E7
2932 D7
3900 A8
3902 A3
3903 A8
3905 A3
3907 B6
3908 A7
3909 B8
3911 B3
3912 B7
3914 B3
3915 E8
3918 C6
3922 D3
3923 E8
3925 D3
3927 E6
3928 E7
3929 D8
3931 E3
3932 D7
3934 E3
3938 E6
7900-A A6
7900-B B6
7901 A3
7902 A4
7904 B3
7905 C4
7907-A D6
7907-B E6
7908 D3
7909 D4
7911 E3
7912 E4
7913 A4
F102 C1
I065 A9
I066 B9
I067 B8
I068 A8
I069 A7
I070 B7
I071 B7
I072 C7
I073 B6
I074 B7
I075 A6
I076 A4
I077 A4
I078 B4
I079 B4
I080 B3
I081 A3
I082 A2
I083 B2
I084 D2
I085 E2
I086 D3
I087 D4
I088 D4
I089 E3
I090 E4
I091 E4
I092 E4
I093 D6
I094 E6
I095 E7
I096 E7
I097 E7
I098 D7
I099 D7
I100 E8
I101 D9
I102 E9

3-30

Audio Processing (AF2) - Audio Board (APDOD)

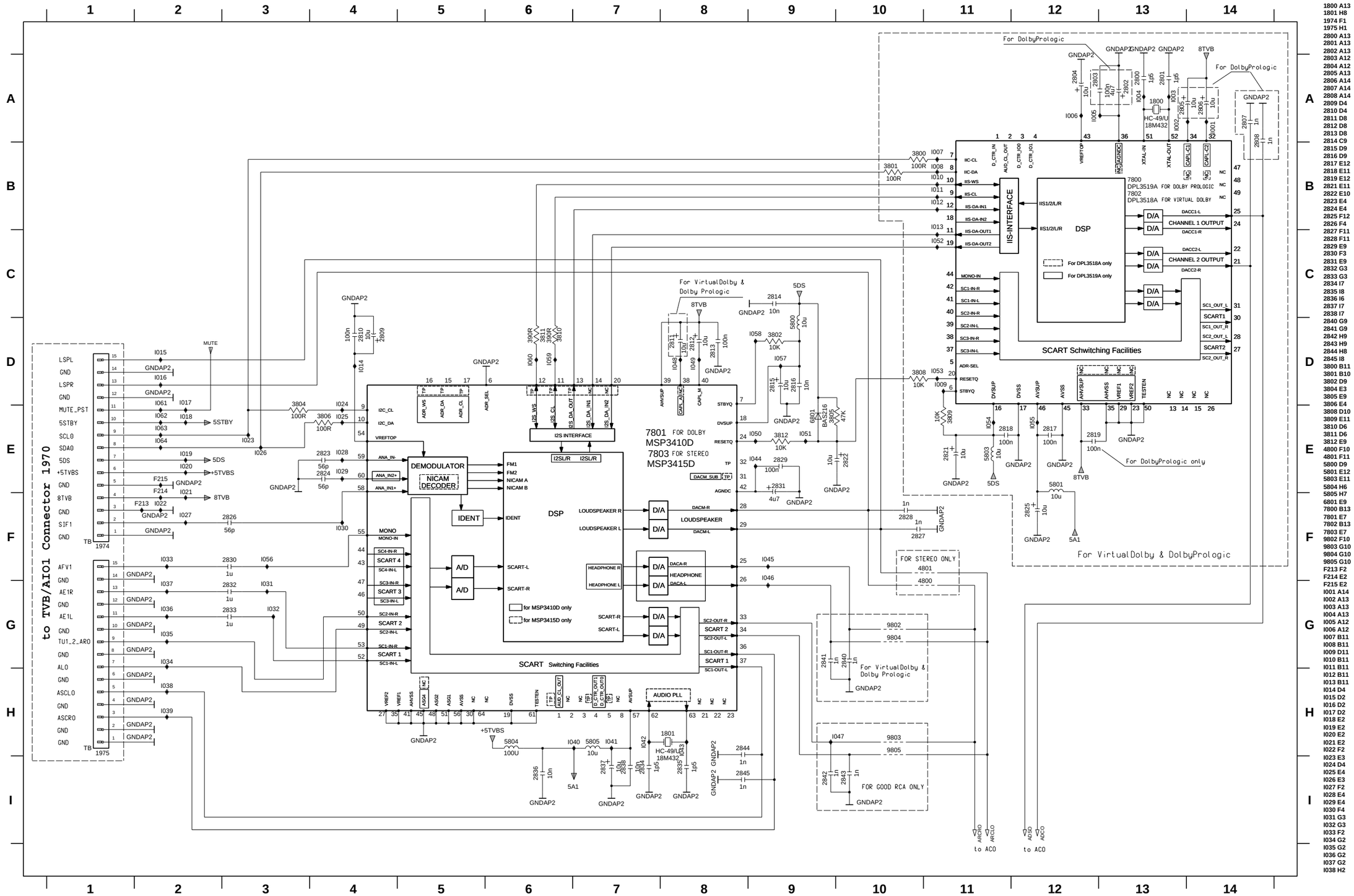

1800 A13	I039 H2
1801 H8	I040 H7
1974 F1	I041 H7
1975 H1	I042 H7
2800 A13	I043 H8
2801 A13	I044 E9
2802 A13	I045 F9
2803 A12	I046 F9
2804 A12	I047 G9
2805 A13	I048 D8
2806 A14	I049 D8
2807 A14	I050 E9
2808 A14	I051 E9
2809 D4	I052 C11
2810 D4	I053 D10
2811 D8	I054 E11
2812 D8	I055 E12
2813 D8	I056 F3
2814 C9	I057 D9
2815 D9	I058 D9
2816 D9	I059 D6
2817 E12	I060 D6
2818 E11	I061 D2
2819 E12	I062 E2
2821 E11	I063 E2
2822 E10	I064 E2
2823 E4	
2824 E4	
2825 F12	
2826 F4	
2827 F11	
2828 F11	
2829 E9	
2830 F3	
2831 E9	
2832 G3	
2833 G3	
2834 I7	
2835 I8	
2836 I6	
2837 I7	
2838 I7	
2840 G9	
2841 G9	
2842 H9	
2843 H9	
2844 H8	
2845 I8	
3800 B11	
3801 B10	
3802 D9	
3804 E3	
3805 E9	
3806 E4	
3808 D10	
3809 E11	
3810 D6	
3811 D6	
3812 E9	
4800 F10	
4801 F11	
5800 D9	
5801 E12	
5803 E11	
5804 H6	
5805 H7	
6801 E9	
7800 B13	
7801 E7	
7802 B13	
7803 E7	
9802 F10	
9803 G10	
9804 G10	
9805 G10	
F213 F2	
F214 E2	
F215 E2	
I001 A14	
I002 A13	
I003 A13	
I004 A13	
I005 A12	
I006 A12	
I007 B11	
I008 B11	
I009 D11	
I010 B11	
I011 B11	
I012 B11	
I013 B11	
I014 D4	
I015 D2	
I016 D2	
I017 D2	
I018 E2	
I019 E2	
I020 E2	
I021 E2	
I022 F2	
I023 E3	
I024 D4	
I025 E4	
I026 E3	
I027 F2	
I028 E4	
I029 E4	
I030 F4	
I031 G3	
I032 G3	
I033 F2	
I034 G2	
I035 G2	
I036 G2	
I037 G2	
I038 H2	

Interconnections															
Circuit	ACO	AF	AF2	AIO1	AIO2	AL	AMP	AP	COTV	CVB	DE	DOSCD	HA	HPAV	IO_1
page	3-29	3-22	3-30	3-16	3-17	3-23	3-13	3-21	3-14	3-19	3-18	3-32	3-26	3-27	3-11
Circuit	KB1D	KB2D	LS	MFSWD	PS (RUB)	PS (TVB)	PT	SF	SFD	TU1	TU2	TV	VS	VSEC	
page	3-33	3-34	3-8	3-34	3-15	3-7	3-28	3-12	3-31	3-9	3-20	3-10	3-24	3-25	

Sound Feature Board (SFD)

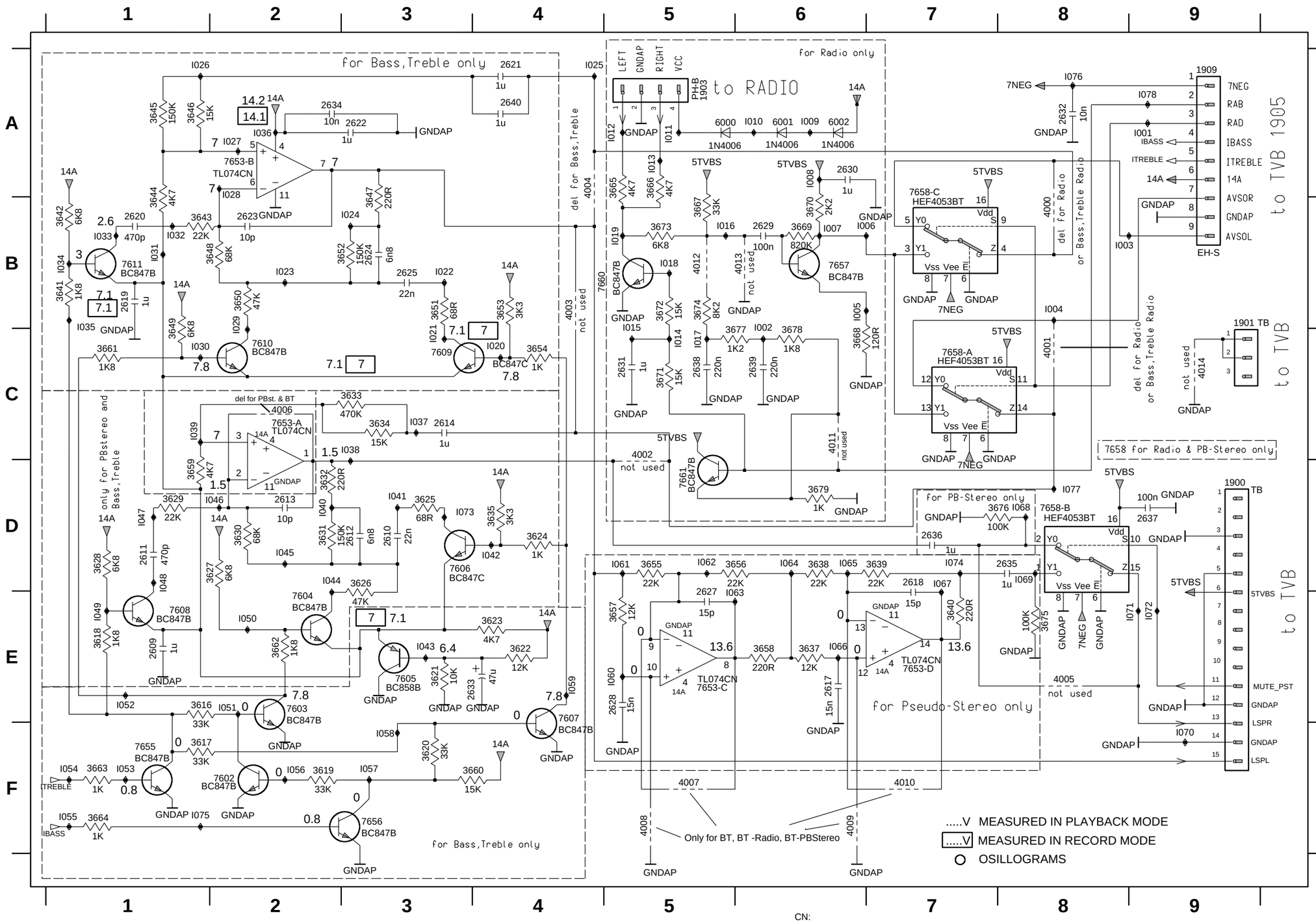

CN:

	Interconnections														
Circuit	ACO	AF	AF2	AIO1	AIO2	AL	AMP	AP	COTV	CVB	DE	DOSCD	HA	HPAV	IO_1
page	3-29	3-22	3-30	3-16	3-17	3-23	3-13	3-21	3-14	3-19	3-18	3-32	3-26	3-27	3-11
Circuit	KB1D	KB2D	LS	MFSWD	PS (RUB)	PS (TVB)	PT	SF	SFD	TU1	TU2	TV	VS	VSEC	
page	3-33	3-34	3-8	3-34	3-15	3-7	3-28	3-12	3-31	3-9	3-20	3-10	3-24	3-25	

1900 D9	3662 E2	I021 C3
1901 B9	3663 F1	I022 B3
1903 A5	3664 F1	I023 B2
1909 A9	3665 A5	I024 B3
2609 E1	3666 A5	I025 A4
2610 D3	3667 B5	I026 A1
2611 D1	3668 C6	I027 A2
2612 D3	3669 B6	I028 A1
2613 D2	3670 B6	I029 B2
2614 C3	3671 C5	I030 C1
2617 E6	3672 B5	I031 B1
2618 D7	3673 B5	I032 B1
2619 B1	3674 B5	I033 B1
2620 B1	3675 E8	I034 B1
2621 A4	3676 D8	I035 B1
2622 A3	3677 C6	I036 A2
2623 B2	3678 C6	I037 C3
2624 B3	3679 D6	I038 C3
2625 B3	4000 B8	I039 C1
2627 E5	4001 C8	I040 D2
2628 E5	4002 C5	I041 D3
2629 B6	4003 B4	I042 D4
2630 A6	4004 A4	I043 E3
2631 C5	4005 E8	I044 D2
2632 A8	4006 C2	I045 D2
2633 E4	4007 F5	I046 D2
2634 A2	4008 F5	I047 D1
2635 D8	4009 F6	I048 D1
2636 D7	4010 F7	I049 E1
2637 D9	4011 C6	I050 E2
2638 C5	4012 B5	I051 E2
2639 C6	4013 B6	I052 E1
2640 A4	4014 C9	I053 F1
3616 E1	6000 A5	I054 F1
3617 F1	6001 A6	I055 F1
3618 E1	6002 A6	I056 F2
3619 F2	7602 F2	I057 F3
3620 F3	7603 E2	I058 F3
3621 E3	7604 E2	I059 E4
3622 E4	7605 E3	I060 E5
3623 E4	7606 D3	I061 D5
3624 D4	7607 E4	I062 D5
3625 D3	7608 E1	I063 E5
3626 D3	7609 C3	I064 D6
3627 D2	7610 C2	I065 D6
3628 D1	7611 B1	I066 E6
3629 D1	7653-A C2	I067 D7
3630 D2	7653-B A2	I068 D8
3631 D2	7653-C E5	I069 D8
3632 D2	7653-D E7	I070 F9
3633 C3	7655 F1	I071 E9
3634 C3	7656 F3	I072 E9
3635 D4	7657 B6	I073 D3
3637 E6	7658-A C7	I074 D7
3638 D6	7658-B D8	I075 F1
3639 D7	7658-C A7	I076 A8
3640 E7	7660 B5	I077 D8
3641 B1	7661 D5	I078 A9
3642 B1	I001 A9	
3643 B1	I002 B6	
3644 B2	I003 B8	
3645 A1	I004 B8	
3646 A1	I005 B6	
3647 B3	I006 B6	
3648 B2	I007 B6	
3649 C1	I008 A6	
3650 B2	I009 A6	
3651 B3	I010 A6	
3652 B3	I011 A5	
3653 B4	I012 A5	
3654 C4	I013 A5	
3655 D5	I014 C5	
3656 D6	I015 B5	
3657 E5	I016 B5	
3658 E6	I017 C5	
3659 D1	I018 B5	
3660 F4	I019 B5	
3661 C1	I020 C4	

3-32

Cinch Out, Scart 2 Board (DOSCD)

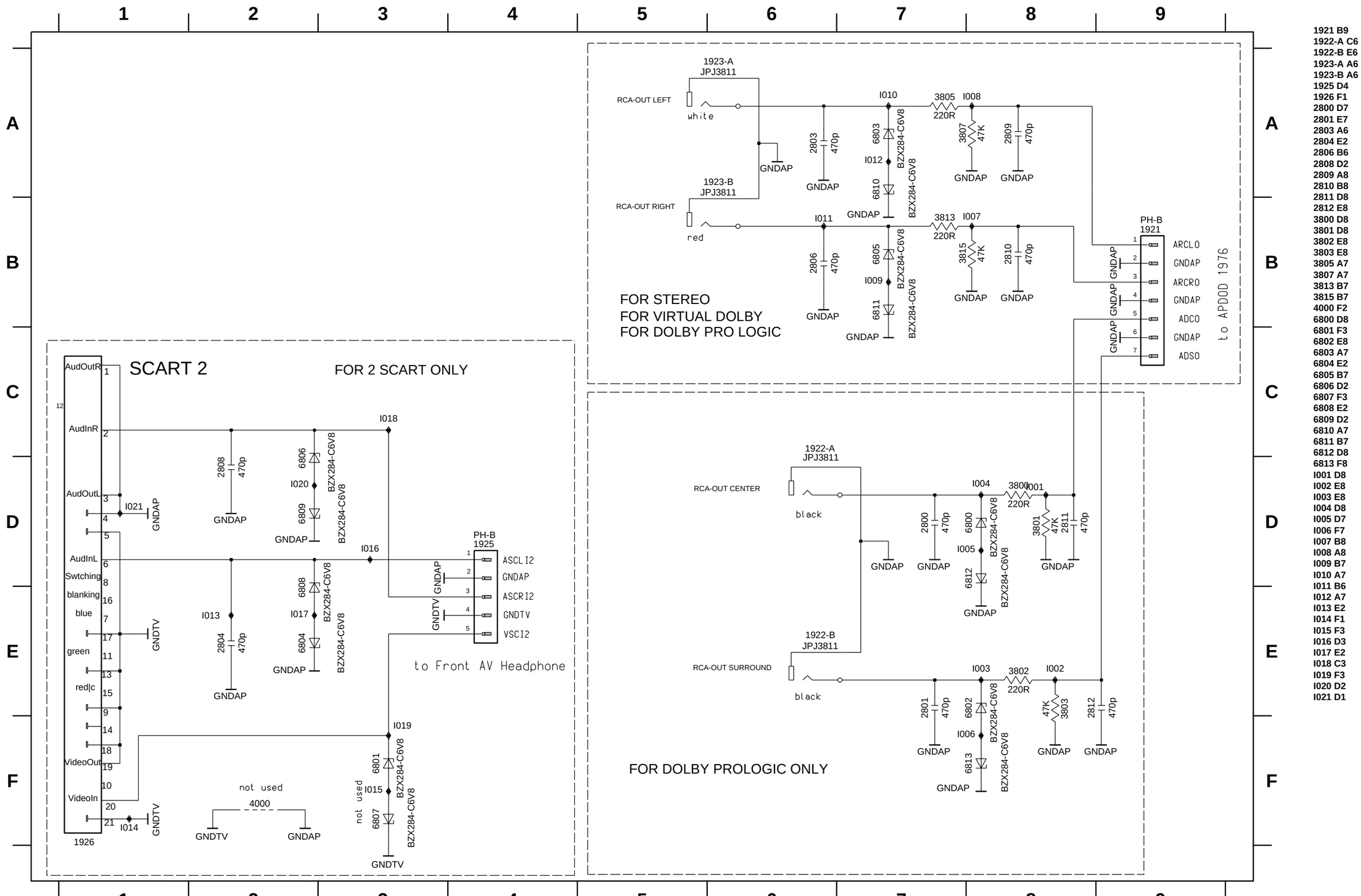

1921 B9
1922-A C6
1922-B E6
1923-A A6
1923-B A6
1925 D4
1926 F1
2800 D7
2801 E7
2803 A6
2804 E2
2806 B6
2808 D2
2809 A8
2810 B8
2811 D8
2812 E8
3800 D8
3801 D8
3802 E8
3803 E8
3805 A7
3807 A7
3813 B7
3815 B7
4000 F2
6800 D8
6801 F3
6802 E8
6803 A7
6804 E2
6805 B7
6806 D2
6807 F3
6808 E2
6809 D2
6810 A7
6811 B7
6812 D8
6813 F8
I001 D8
I002 E8
I003 E8
I004 D8
I005 D7
I006 F7
I007 B8
I008 A8
I009 B7
I010 A7
I011 B6
I012 A7
I013 E2
I014 F1
I015 F3
I016 D3
I017 E2
I018 C3
I019 F3
I020 D2
I021 D1

Interconnections															
Circuit	ACO	AF	AF2	AIO1	AIO2	AL	AMP	AP	COTV	CVB	DE	DOSCD	HA	HPAV	IO_1
page	3-29	3-22	3-30	3-16	3-17	3-23	3-13	3-21	3-14	3-19	3-18	3-32	3-26	3-27	3-11
Circuit	KB1D	KB2D	LS	MFSWD	PS (RUB)	PS (TVB)	PT	SF	SFD	TU1	TU2	TV	VS	VSEC	
page	3-33	3-34	3-8	3-34	3-15	3-7	3-28	3-12	3-31	3-9	3-20	3-10	3-24	3-25	

Keys & Display Board (KB1D)

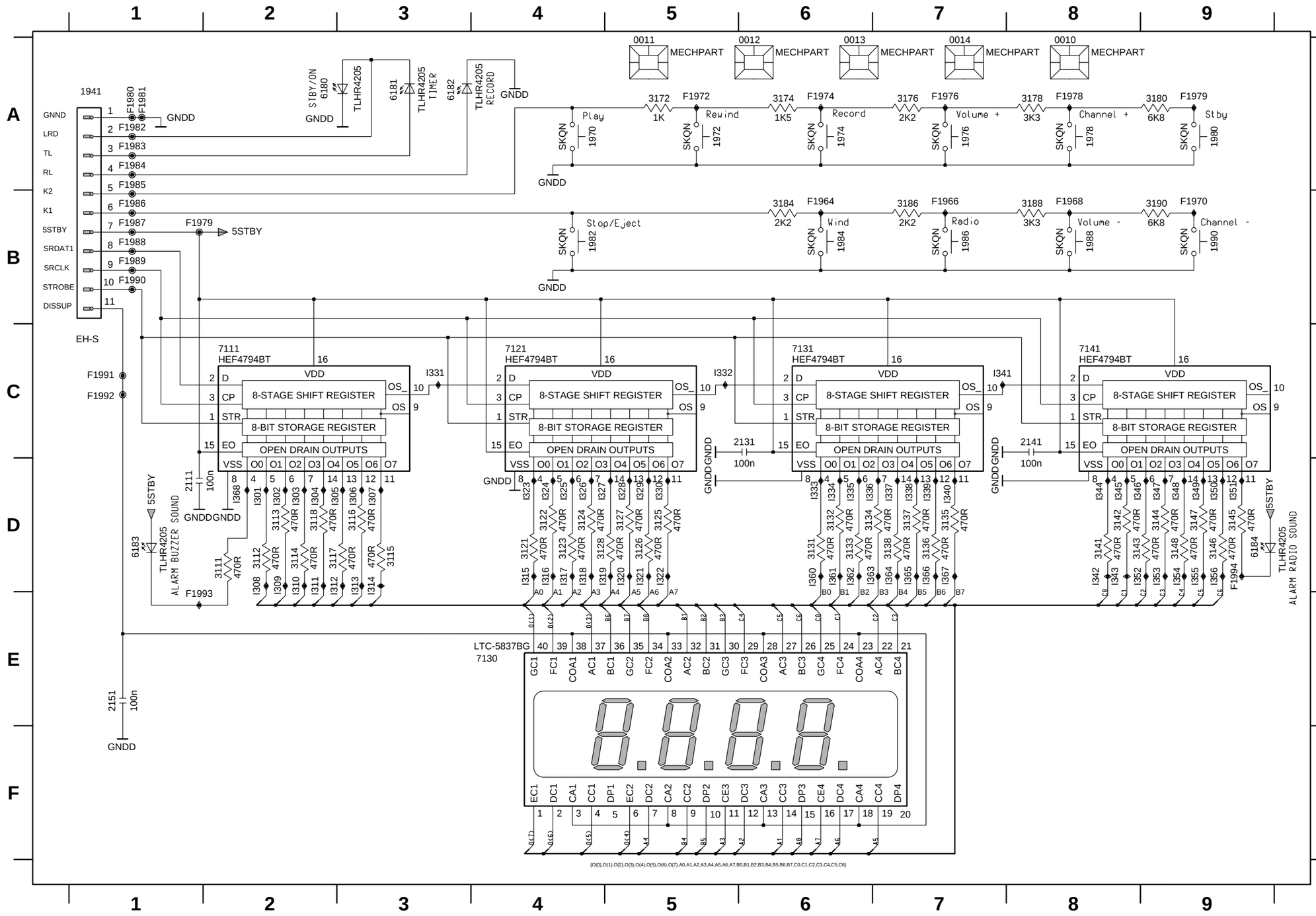

Interconnections															
Circuit	ACO	AF	AF2	AIO1	AIO2	AL	AMP	AP	COTV	CVB	DE	DOSCD	HA	HPAV	IO_1
page	3-29	3-22	3-30	3-16	3-17	3-23	3-13	3-21	3-14	3-19	3-18	3-32	3-26	3-27	3-11
Circuit	KB1D	KB2D	LS	MFSWD	PS (RUB)	PS (TVB)	PT	SF	SFD	TU1	TU2	TV	VS	VSEC	
page	3-33	3-34	3-8	3-34	3-15	3-7	3-28	3-12	3-31	3-9	3-20	3-10	3-24	3-25	

0010 A8 F1972 A5 I356 D9
0011 A5 F1974 A6 I360 D6
0012 A6 F1976 A7 I361 D6
0013 A6 F1978 A8 I362 D6
0014 A7 F1979 B1 I363 D6
1941 A1 F1979 A9 I364 D7
1970 A4 F1980 A1 I365 D7
1972 A5 F1981 A1 I366 D7
1974 A6 F1982 A1 I367 D7
1976 A7 F1983 A1 I368 D2
1978 A8 F1984 A1
1980 A9 F1985 A1
1982 B4 F1986 B1
1984 B6 F1987 B1
1986 B7 F1988 B1
1988 B8 F1989 B1
1990 B9 F1990 B1
2111 D1 F1991 C1
2131 C6 F1992 C1
2141 C8 F1993 E1
2151 E1 F1994 D9
3111 D2 I301 D2
3112 D2 I302 D2
3113 D2 I303 D2
3114 D2 I304 D2
3115 D3 I305 D2
3116 D3 I306 D3
3117 D2 I307 D3
3118 D2 I308 D2
3121 D4 I309 D2
3122 D4 I310 D2
3123 D4 I311 D2
3124 D4 I312 D2
3125 D5 I313 D3
3126 D5 I314 D3
3127 D5 I315 D4
3128 D4 I316 D4
3131 D6 I317 D4
3132 D6 I318 D4
3133 D6 I319 D4
3134 D6 I320 D5
3135 D7 I321 D5
3136 D7 I322 D5
3137 D7 I323 D4
3138 D7 I324 D4
3141 D8 I325 D4
3142 D8 I326 D4
3143 D8 I327 D4
3144 D9 I328 D5
3145 D9 I329 D5
3146 D9 I330 D5
3147 D9 I331 C3
3148 D9 I332 C5
3172 A5 I333 D6
3174 A6 I334 D6
3176 A7 I335 D6
3178 A8 I336 D6
3180 A9 I337 D7
3184 B6 I338 D7
3186 B7 I339 D7
3188 B8 I340 D7
3190 B9 I341 C7
6180 A2 I342 D8
6181 A3 I343 D8
6182 A3 I344 D8
6183 D1 I345 D8
6184 D9 I346 D8
7111 C2 I347 D9
7121 C4 I348 D9
7130 E4 I349 D9
7131 C6 I350 D9
7141 C8 I351 D9
F1964 B6 I352 D8
F1966 B7 I353 D9
F1968 B8 I354 D9
F1970 B9 I355 D9

Key Board (KB2D)

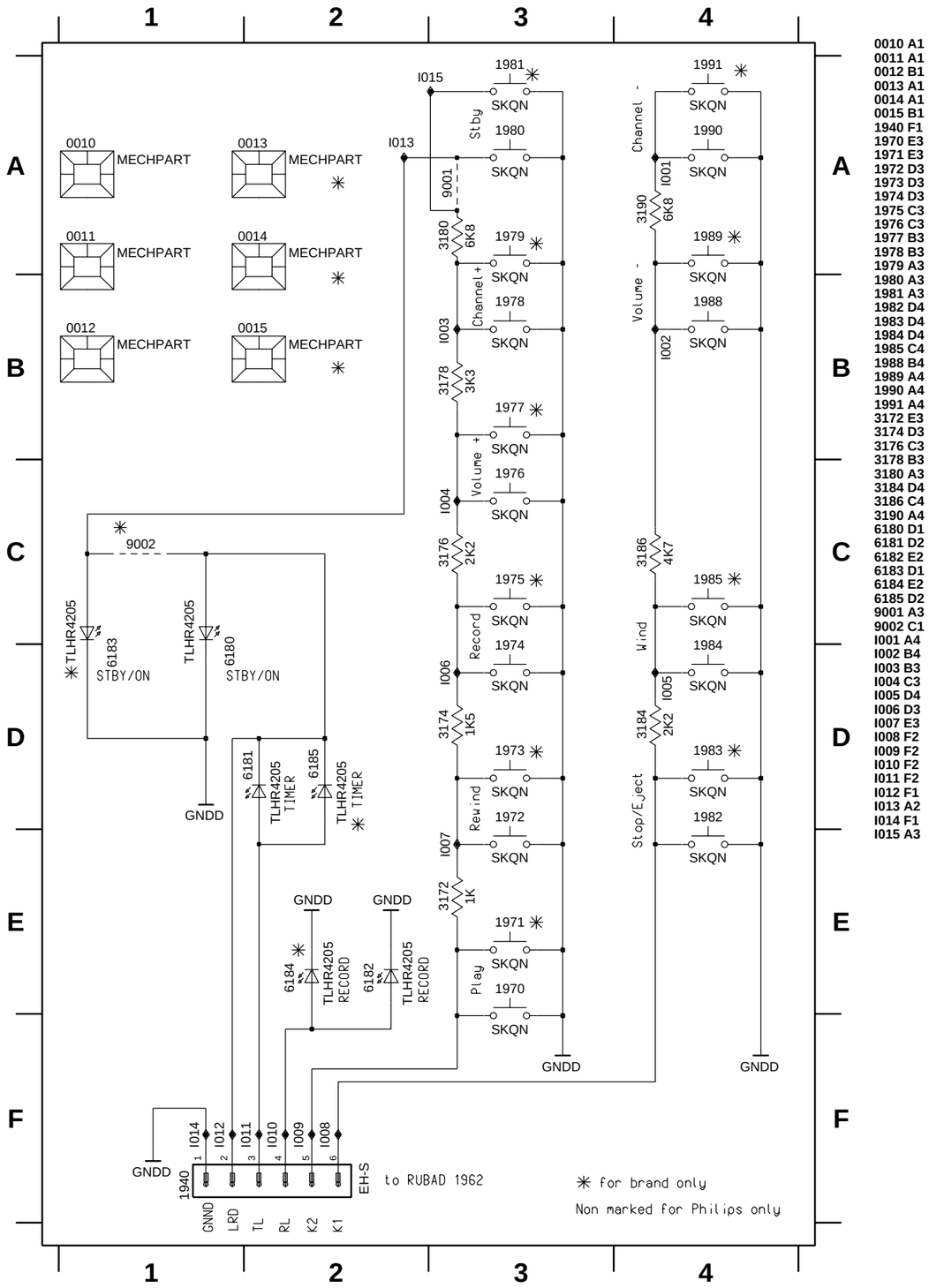

0010 A1
0011 A1
0012 B1
0013 A1
0014 A1
0015 B1
1940 F1
1970 E3
1971 E3
1972 D3
1973 D3
1974 D3
1975 C3
1976 C3
1977 B3
1978 B3
1979 A3
1980 A3
1981 A3
1982 D4
1983 D4
1984 D4
1985 C4
1988 B4
1989 A4
1990 A4
1991 A4
3172 E3
3174 D3
3176 C3
3178 B3
3180 A3
3184 D4
3186 C4
3190 A4
6180 D1
6181 D2
6182 E2
6183 D1
6184 E2
6185 D2
9001 A3
9002 C1
I001 A4
I002 B4
I003 B3
I004 C3
I005 D4
I006 D3
I007 E3
I008 F2
I009 F2
I010 F2
I011 F2
I012 F1
I013 A2
I014 F1
I015 A3

Interconnections

Circuit	ACO	AF	AF2	AIO1	AIO2	AL	AMP	AP	COTV	CVB	DE	DOSCD	HA	HPAV	IO_1
page	3-29	3-22	3-30	3-16	3-17	3-23	3-13	3-21	3-14	3-19	3-18	3-32	3-26	3-27	3-11
Circuit	KB1D	KB2D	LS	MFSWD	PS (RUB)	PS (TVB)	PT	SF	SFD	TU1	TU2	TV	VS	VSEC	
page	3-33	3-34	3-8	3-34	3-15	3-7	3-28	3-12	3-31	3-9	3-20	3-10	3-24	3-25	

3-34

Mainsfilter Board (MFSWD)

1701 B1
1702 B2
1703 B4
1705 A6
1935 B1
2708 B4
2709 B4
2720 B5
2721 B6
2722 A7
3702 B3
3712 B4
3713 A4
3714 A5
3715 A1
5704 A4
5705 B4
5708 B6
5709 A6
5710 A7
8700-A A8
8700-B B8
9700 A4
9701 B4
9702 B7
I001 A1
I002 B1
I003 A2
I004 A3
I005 B2
I006 B3
I007 B3
I008 A4
I009 B4
I010 A4
I011 B2
I012 B4
I013 A6
I014 A7
I015 B7
I016 A8

Power Supply (PS) - TV Board (TVB)

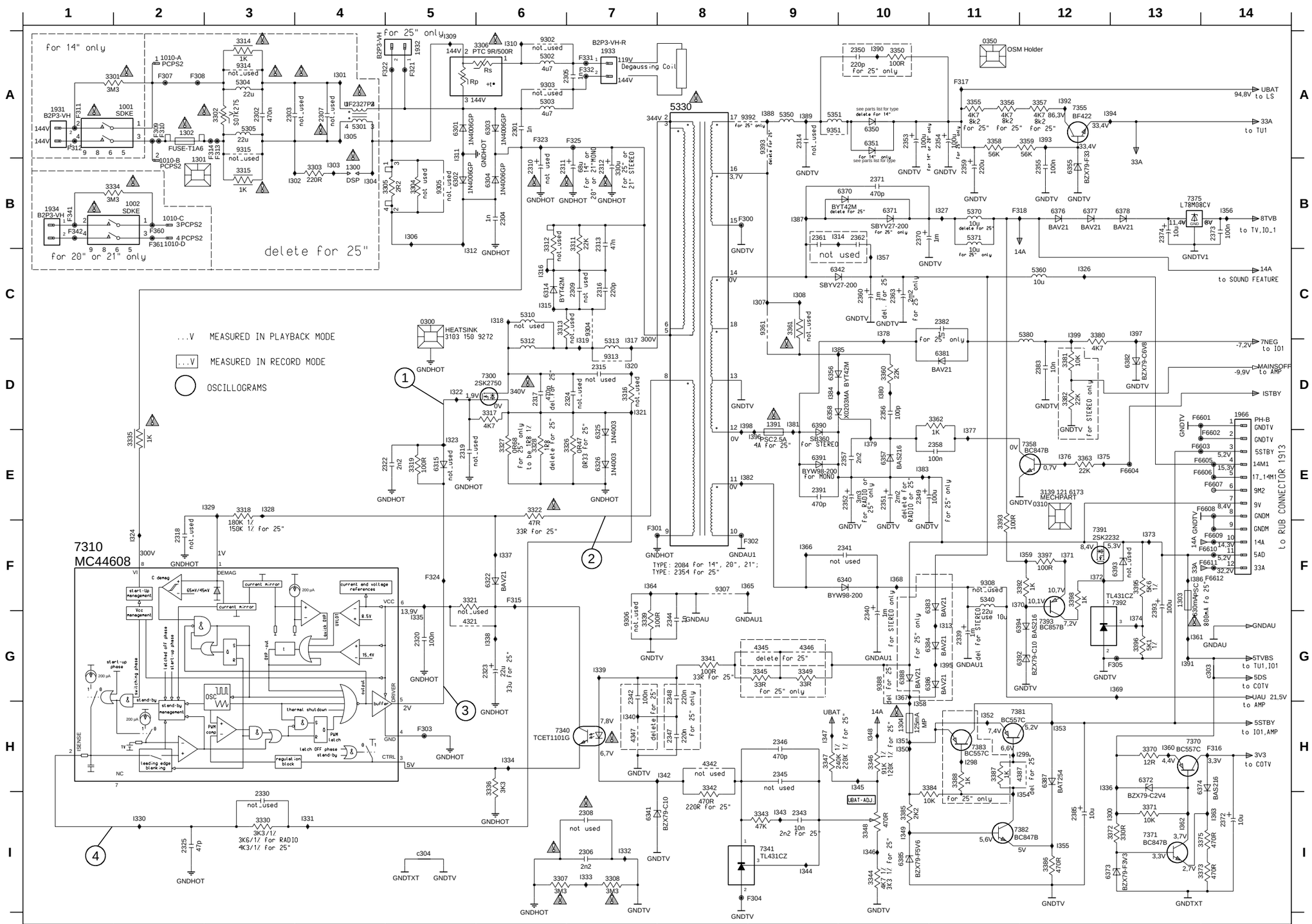

	1	2	3	4	5	6	7	8	9	10	11	12	13	14
A														
B														
C														
D														
E														
F														
G														
H														
I														

	Interconnections														
Circuit	ACO	AF	AF2	AIO1	AIO2	AL	AMP	AP	COTV	CVB	DE	DOSCD	HA	HPAV	IO_1
page	3-29	3-22	3-30	3-16	3-17	3-23	3-13	3-21	3-14	3-19	3-18	3-32	3-26	3-27	3-11
Circuit	KB1D	KB2D	LS	MFSWD	PS (RUB)	PS (TVB)	PT	SF	SFD	TU1	TU2	TV	VS	VSEC	
page	3-33	3-34	3-8	3-34	3-15	3-7	3-28	3-12	3-31	3-9	3-20	3-10	3-24	3-25	

0300 C5
0310 E12
0350 A9
1001 A2
1002 B2
1010-A A2
1010-B B2
1010-C B2
1010-D B2
1300 B4
1301 B2
1302 A2
1303 F13
1304 H10
1391 D9
1931 A1
1932 A5
1933 A7
1934 B1
1966 D14
2301 A6
2302 A3
2303 A3
2304 B6
2305 A7
2306 I7
2307 A4
2308 I7
2309 C7
2310 B6
2311 B6
2312 B7
2313 B7
2314 A9
2315 D7
2316 C7
2317 D6
2318 F2
2319 E5
2320 G5
2322 E5
2323 G6
2324 D7
2325 I2
2330 I3
2339 G11
2340 G10
2341 F10
2342 G7
2343 I9
2344 G8
2345 H9
2346 H9
2347 H8
2348 G8
2349 E10
2350 A10
2351 E10
2352 E10
2353 A10
2354 A11
2355 B12
2356 D10
2357 E10
2358 E11
2359 B11
2360 C10
2361 B9
2362 B10
2363 C10
2370 B10
2371 B10
2372 I14
2373 B14
2374 B13
2382 C11
2383 D12
2385 I12
3301 A1
3302 A3
3303 B4
3304 B5
3305 B5
3306 A5
3307 I6
3308 I7
3311 B7
3312 B6
3313 C6
3314 A3
3315 B3
3316 D7
3317 D6
3318 E3
3319 E5
3321 F5
3322 E6
3326 E7
3327 E6
3328 E6
3330 I3
3334 B1
3335 E2
3336 H6
3339 G7
3341 G8
3342 H8
3343 I9
3344 I10
3345 G9
3346 H10
3347 H9
3348 I10
3349 G7
3350 A10
3355 A11
3356 A11
3357 A12
3358 A11
3359 A12
3360 D10
3361 C9
3362 D11
3363 E12
3370 B13
3371 I13
3372 I13
3373 I14
3375 I14
3380 C12
3381 D12
3382 D12
3384 H11
3385 I10
3386 I12
3387 H11
3388 F12
3393 F11
3395 F13
3396 G13
3397 F12
3398 F12
4321 G5
4342 H8
4345 G9
4346 G9
4347 H7
4387 H12
5301 A4
5302 A6
5303 A6
5304 A3
5305 A3
5310 C6
5312 D6
5313 D7
5330 A8
5340 F11
5350 A9
5351 A10
5360 C12
5370 B11
5371 B11
5380 C12
6301 A5
6302 B5
6303 A6
6304 B6
6314 C6
6315 E5
6322 F6
6325 E7
6326 E7
6340 F10
6341 I7
6342 C9
6350 A10
6355 B12
6356 D9
6357 E10
6358 D9
6370 B10
6371 B10
6372 H13
6373 I12
6374 H14
6376 B12
6377 B12
6382 D13
6383 F11
6384 G11
6385 I10
6386 G11
6387 H12
6388 G10
6390 D9
6391 E9
6392 G12
6393 F13
6394 G12
7300 D6
7310 F1
7340 H7
7341 I9
7355 A12
7358 E12
7370 H13
7371 I13
7375 B13
7381 H12
7382 I11
7383 H11
7391 F12
7392 F13
7393 G12
9302 A6
9303 A6
9304 C7
9305 B5
9306 G7
9307 F8
9308 F11
9313 D7
9314 A3
9315 A3
9351 A10
9361 C9
9388 G10
9392 A9
9393 A9
F300 B8
F301 F7
F302 F9
F303 H5
F304 I9
F305 G13
F307 A2
F308 A2
F309 A2
F310 A2
F311 A1
F312 A1
F313 A3
F314 A3
F315 F6
F316 H14
F317 A11
F318 B11
F321 A5
F322 A5
F323 A6
F324 F5
F325 A7
F331 A7
F332 A7
F341 B1
F342 B1
F360 B2
F361 B2
F6601 D14
F6602 E14
F6603 E13
F6604 E13
F6605 E14
F6606 E14
F6607 E14
F6608 E14
F6609 F14
F6610 F14
F6611 F14
F6612 F14
I298 H11
I299 H12
I300 I12
I301 A4
I302 B3
I303 B4
I304 B4
I305 A4
I306 B5
I307 C9
I308 C9
I309 A5
I310 A6
I311 A5
I312 C5
I313 G11
I314 B9
I315 C6
I316 C6
I317 D7
I318 C6
I319 D7
I320 D7
I321 D7
I322 D5
I323 E5
I324 F2
I326 C12
I327 B11
I328 E3
I329 E3
I330 I2
I331 I4
I332 I7
I333 I7
I334 H6
I335 G5
I336 H12
I337 F6
I338 G6
I339 G7
I340 H7
I341 H8
I342 H8
I343 I9
I344 I9
I345 H10
I346 I10
I347 H9
I348 I10
I349 I10
I350 H10
I351 H10
I352 H11
I353 H12
I354 I12
I355 I12
I356 B14
I357 C10
I358 H10
I359 F12
I360 H13
I361 G13
I362 I13
I363 I14
I364 F7
I365 F8
I366 F9
I367 G10
I368 F10
I369 G13
I370 F11
I371 F11
I372 F12
I373 F13
I374 G13
I375 E12
I376 E12
I377 E11
I378 C10
I379 E10
I380 D10
I381 D9
I382 E8
I383 E10
I384 D9
I385 D9
I386 F13
I387 B9
I388 A9
I389 A9
I390 A10
I391 G13
I392 A12
I393 A12
I394 A12
I395 G11
I396 E9
I397 C13
I398 D8
I399 C12
c303 G14
c304 I5

3-8

Deflection (LS) - TV Board (TVB)

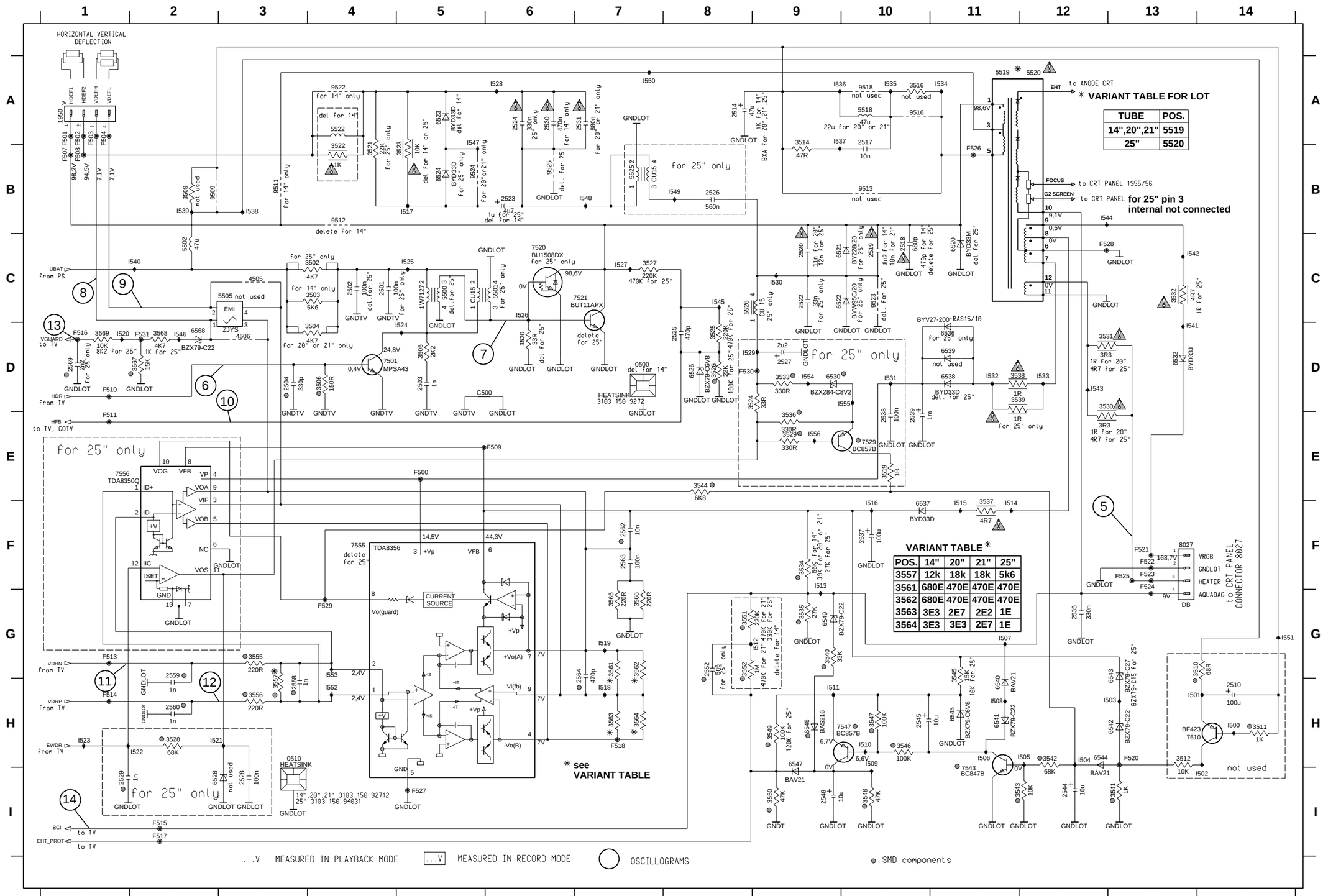

0500 D7	7520 C6
0510 H3	7521 C7
1950 A1	7529 E10
2501 C4	7543 I11
2502 C4	7547 H10
2503 D5	7555 F4
2504 D3	7556 E1
2510 H14	8027 F13
2514 A8	9509 B2
2517 A10	9511 B3
2518 C10	9512 B4
2519 C10	9513 B10
2520 C9	9516 A10
2522 C9	9518 A10
2523 B6	9522 A4
2524 A6	9523 C10
2525 D8	9524 B5
2526 B8	9525 B6
2527 D9	C500 D5
2528 I3	F500 E5
2529 I1	F501 A1
2530 A6	F502 A1
2531 A7	F503 A1
2535 G12	F504 A1
2537 F10	F507 B1
2538 E10	F508 B1
2539 E10	F509 E6
2544 I12	F510 D1
2545 H10	F511 E1
2548 I9	F513 G1
2552 G8	F514 H1
2558 H3	F515 I2
2559 G2	F516 D1
2560 H2	F517 I2
2562 F7	F518 H7
2563 F7	F520 H13
2564 G7	F521 F13
2569 D1	F522 F13
3502 C4	F523 F13
3503 C4	F524 F13
3504 D4	F525 F13
3505 D5	F526 B11
3506 D4	F527 I5
3509 B2	F528 C12
3510 G14	F529 G4
3511 H14	F530 D8
3512 H13	F531 D2
3514 A9	I500 H14
3516 A10	I501 H13
3519 E10	I502 I14
3520 D6	I503 H13
3521 B4	I504 H12
3522 B4	I505 H12
3523 B5	I506 H11
3524 D9	I507 G11
3525 D8	I508 H11
3526 D8	I509 H10
3527 C7	I510 H10
3528 H2	I511 H9
3529 E9	I512 G9
3530 D12	I513 F9
3531 D12	I514 F11
3532 C13	I515 F11
3533 D9	I516 F10
3534 F9	I517 B5
3535 G9	I518 H7
3536 E9	I519 G7
3537 F11	I520 D1
3538 D11	I521 H2
3539 D11	I522 H2
3540 G9	I523 H1
3541 I13	I524 D5
3542 H12	I525 C5
3543 I12	I526 C6
3544 E8	I527 C7
3545 G11	I528 A6
3546 H10	I529 D8
3547 H10	I530 C9
3548 I10	I531 D10
3549 H9	I532 D11
3550 I9	I533 D12
3551 G8	I534 A11
3552 G8	I535 A10
3555 G3	I536 A9
3556 H3	I537 A9
3557 H3	I538 B3
3561 G7	I539 B2
3562 G7	I540 C2
3563 H7	I541 D13
3564 H7	I542 C13
3565 G7	I543 D12
3566 G7	I544 B12
3567 D2	I545 C8
3568 D2	I546 D2
3569 D1	I547 A5
4505 C3	I548 B7
4506 D3	I549 B8
5500 C5	I550 A7
5501 C6	I551 G14
5502 C2	I552 H4
5505 C2	I553 G4
5518 A10	I554 D9
5519 A11	I555 D10
5520 A12	I556 E9
5522 A4	
5525 B7	
5526 C8	
6520 C11	
6521 C9	
6522 C9	
6523 A5	
6524 B5	
6526 D8	
6528 I2	
6530 D9	
6532 D13	
6536 D11	
6537 F10	
6538 D11	
6539 D11	
6540 H11	
6541 H11	
6542 H13	
6543 G13	
6544 H12	
6545 H11	
6547 H9	
6548 H9	
6549 G9	
6568 D2	
7501 D4	
7510 H14	

Interconnections														
Circuit	ACO	AF	AF2	AIO1	AIO2	AL	AMP	AP	COTV	CVB	DE	DOSCD	HA	HPAV	IO_1
page	3-29	3-22	3-30	3-16	3-17	3-23	3-13	3-21	3-14	3-19	3-18	3-32	3-26	3-27	3-11
Circuit	KB1D	KB2D	LS	MFSWD	PS (RUB)	PS (TVB)	PT	SF	SFD	TU1	TU2	TV	VS	VSEC	
page	3-33	3-34	3-8	3-34	3-15	3-7	3-28	3-12	3-31	3-9	3-20	3-10	3-24	3-25	

Tuner 1 (TU1) - TV Board (TVB)

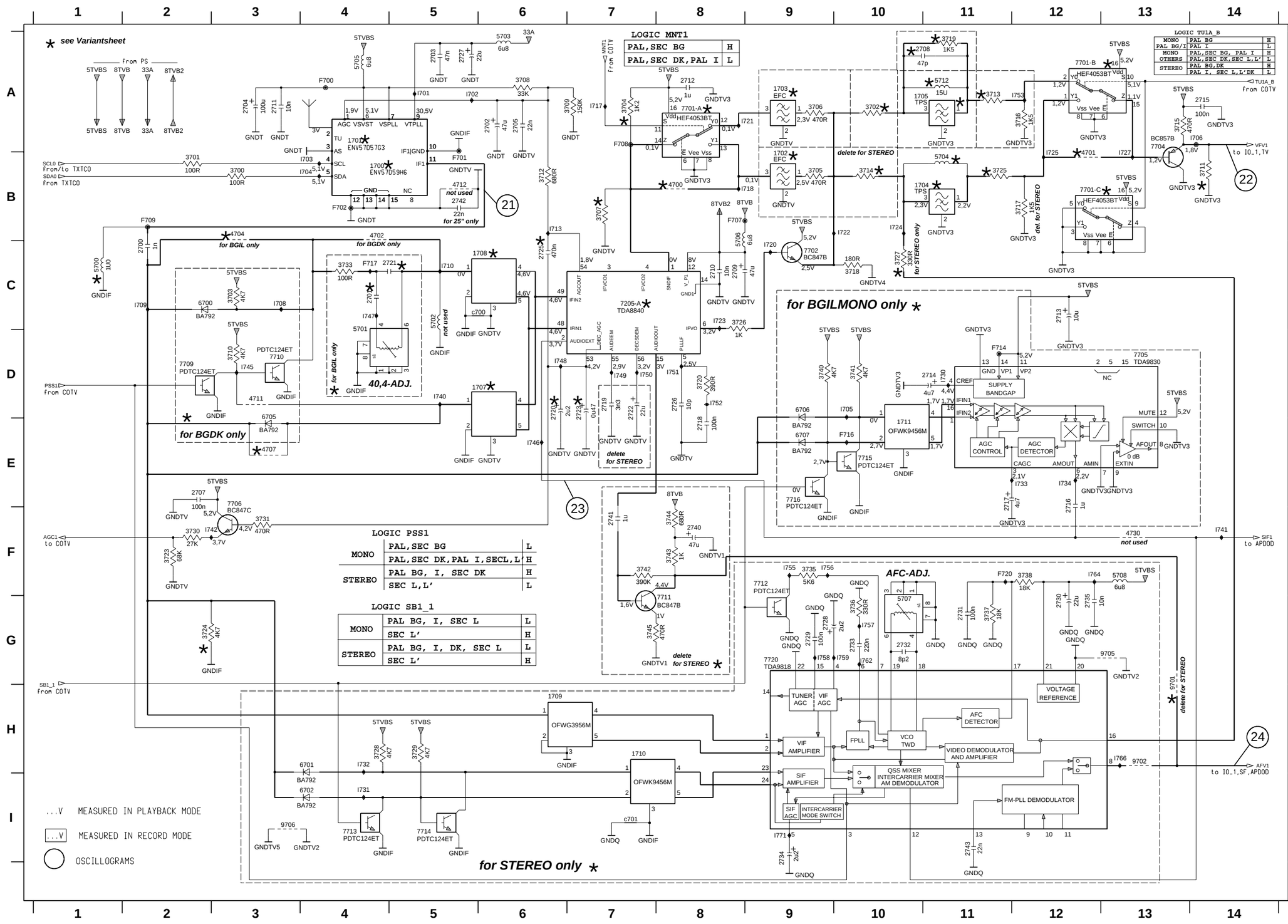

Interconnections															
Circuit	ACO	AF	AF2	AIO1	AIO2	AL	AMP	AP	COTV	CVB	DE	DOSCD	HA	HPAV	IO_1
page	3-29	3-22	3-30	3-16	3-17	3-23	3-13	3-21	3-14	3-19	3-18	3-32	3-26	3-27	3-11
Circuit	KB1D	KB2D	LS	MFSWD	PS (RUB)	PS (TVB)	PT	SF	SFD	TU1	TU2	TV	VS	VSEC	
page	3-33	3-34	3-8	3-34	3-15	3-7	3-28	3-12	3-31	3-9	3-20	3-10	3-24	3-25	

1700 B4
1701 A4
1702 B9
1703 A9
1704 B10
1705 A10
1707 D5
1708 C5
1709 H6
1710 H7
1711 E10
2700 C2
2701 C4
2702 A6
2703 A5
2704 A3
2705 A6
2707 E2
2708 A10
2709 C8
2710 C8
2711 A3
2712 A8
2713 C12
2714 D11
2715 A14
2716 E12
2717 E11
2718 E8
2719 D7
2720 D6
2721 C5
2722 D7
2723 D7
2725 C6
2726 D8
2727 A5
2728 G9
2729 G9
2730 G12
2731 G11
2732 G10
2733 G10
2734 I9
2735 G12
2740 F8
2741 F7
2742 B5
2743 I11
3700 B3
3701 B2
3702 A10
3703 C3
3704 A7
3705 B9
3706 A9
3707 B7
3708 A6
3709 A7
3710 D3
3711 B14
3712 B6
3713 A11
3714 B10
3715 A13
3716 A12
3717 B12
3718 C10
3719 A11
3720 D8
3723 F2
3724 G2
3725 B11
3726 C8
3727 C10
3728 H4
3729 H5
3730 F2
3731 F3
3733 C4
3735 F9
3736 G10
3737 G11
3738 F12
3740 D9
3741 D10
3742 F7
3743 F8
3744 F8
3745 G7
4700 B8
4701 B12
4702 B4
4704 B3
4707 E3
4711 D3
4712 B5
4730 F13
5700 C1
5701 C4
5702 C5
5703 A6
5704 B11
5705 A4
5706 B8
5707 G10
5708 F13
5712 A11
6700 C2
6701 H4
6702 I4
6705 E3
6706 D9
6707 E9
7205-A C7
7701-A A8
7701-B A12
7701-C B12
7702 C9
7704 A13
7705 D13
7706 E3
7709 D2
7710 D3
7711 G8
7712 F9
7713 I4
7714 I5
7715 E10
7716 E9
7720 G9
9701 G13
9702 H13
9705 G13
9706 I3
F700 A4
F701 B5
F702 B4
F707 B8
F708 A7
F709 B2
F714 D11
F716 E10
F717 C4
F720 F11
I701 A5
I702 A5
I703 B4
I704 B4
I705 D10
I706 A14
I708 C3
I709 C2
I710 C5
I713 B6
I717 A7
I718 B9
I720 C9
I721 A9
I722 B10
I723 C8
I724 B10
I725 B12
I727 B13
I730 D11
I731 I4
I732 H4
I733 E12
I734 E12
I740 D5
I741 F14
I746 D6
I747 C4
I748 D6
I749 D7
I750 D7
I751 D8
I752 D8
I753 A12
I755 F9
I756 F9
I757 G10
I758 G9
I759 G10
I762 G10
I764 F12
I766 H13
I771 I9
c700 C6
c701 I7

4-12

Cinch Out, Scart 2 Board (DOSCD)

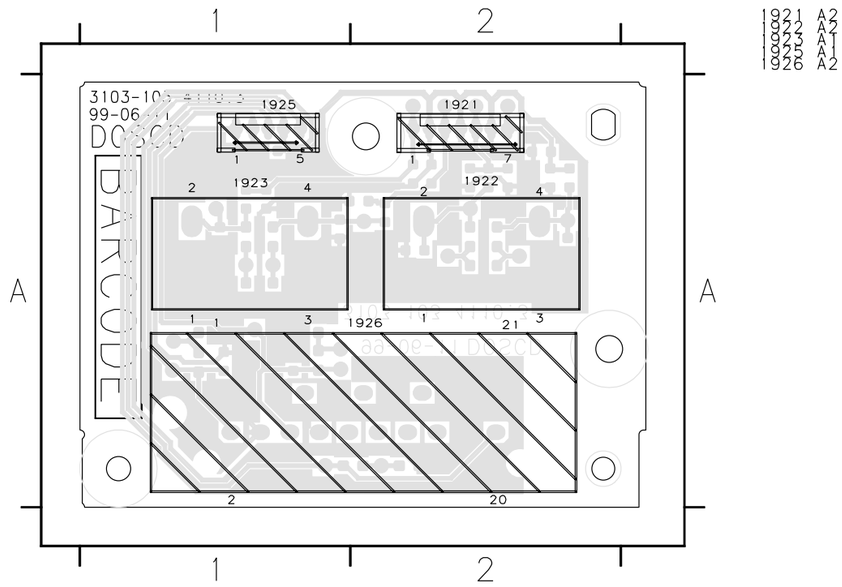

1921 A2
1922 A2
1923 A1
1925 A1
1926 A2

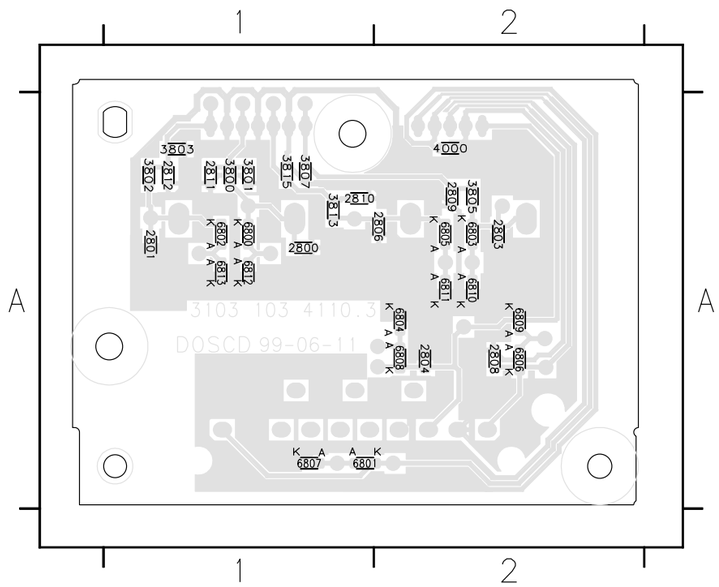

2800 A1
2801 A2
2803 A2
2804 A2
2806 A2
2808 A2
2809 A1
2810 A1
2811 A1
3800 A1
3801 A1
3802 A1
3803 A1
3805 A2
3807 A1
3813 A1
3815 A2
4000 A1
6801 A2
6807 A2

Key Board (KB2D)

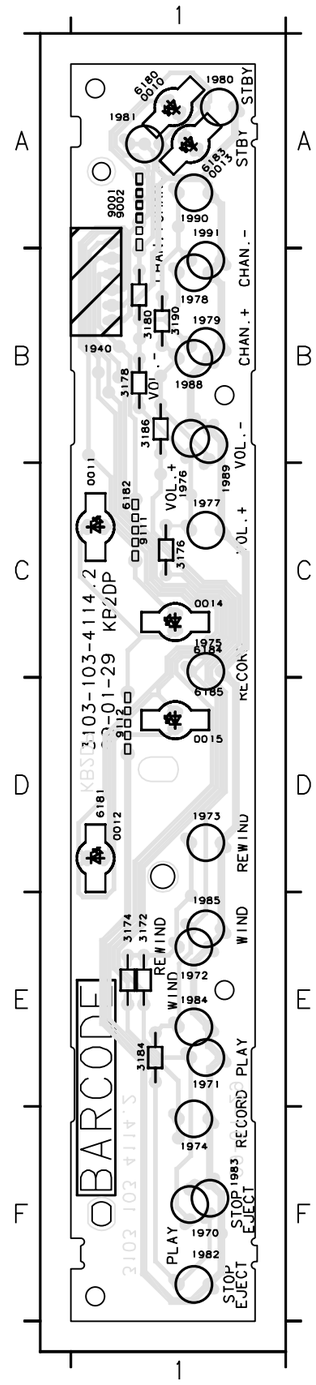

0010 A1
0011 C1
0012 D1
0013 A1
0014 C1
0015 D1
1940 B1
1970 F1
1971 E1
1972 E1
1973 F1
1974 E1
1975 E1
1976 C1
1977 C1
1978 B1
1979 B1
1980 A1
1981 A1
1982 F1
1983 F1
1984 F1
1985 F1
1986 C1
1988 B1
1989 C1
1990 A1
1991 A1
3172 D1
3174 C1
3176 B1
3178 B1
3180 A1
3184 E1
3186 C1
6180 A1
6181 C1
6182 C1
6183 A1
6184 D1
9111 A1

Keys & Display Board (KB1D)

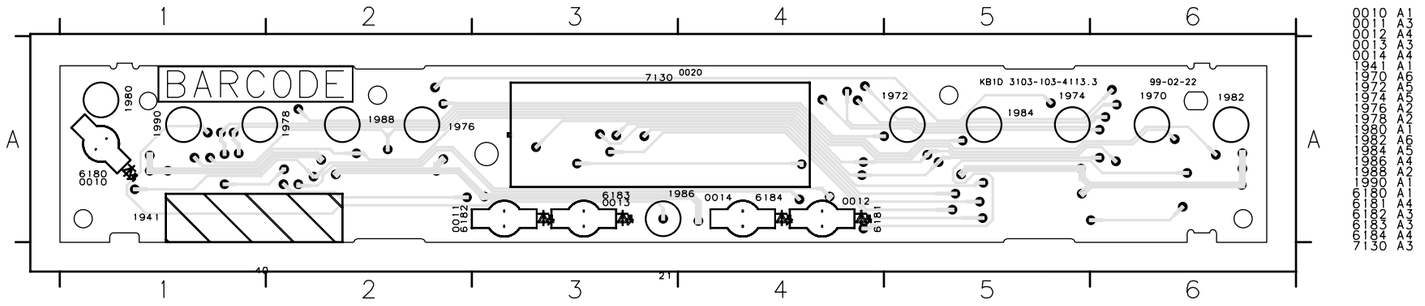

0010 A1
0011 A3
0012 A4
0013 A3
0014 A4
1941 A1
1970 A6
1972 A5
1974 A5
1976 A2
1978 A2
1980 A1
1982 A6
1984 A5
1986 A4
1988 A2
1990 A1
6180 A1
6181 A4
6182 A3
6183 A3
6184 A4
7130 A3

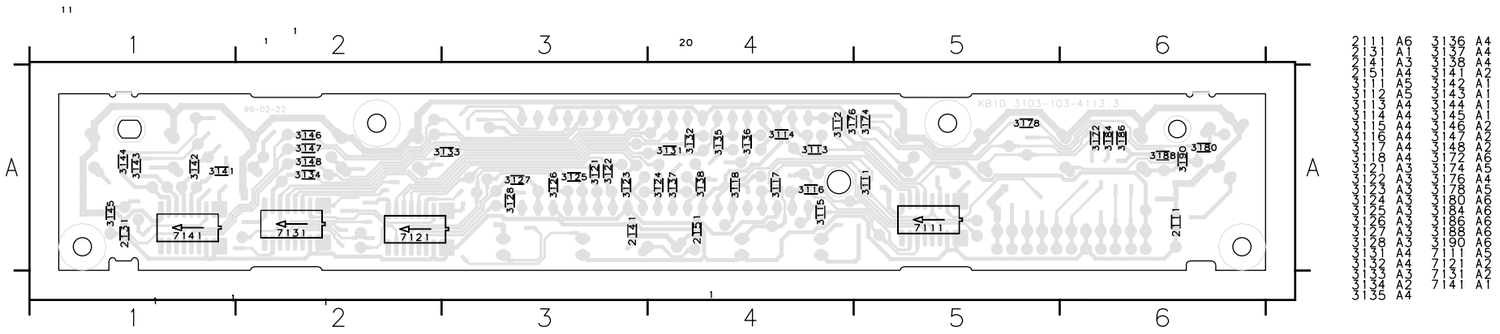

2111 A6
2131 A1
2141 A3
2151 A4
3111 A5
3112 A5
3113 A4
3114 A4
3115 A4
3116 A4
3117 A4
3118 A4
3121 A3
3122 A3
3123 A3
3124 A3
3125 A3
3126 A3
3127 A3
3128 A3
3131 A4
3132 A4
3133 A3
3134 A2
3135 A4
3136 A4
3137 A4
3138 A4
3141 A2
3142 A1
3143 A1
3144 A1
3145 A1
3146 A2
3147 A2
3148 A2
3172 A6
3174 A5
3176 A4
3178 A5
3180 A6
3184 A6
3186 A6
3188 A6
3190 A6
7111 A5
7121 A2
7131 A2
7141 A1

Sound Feature Board (SFD)

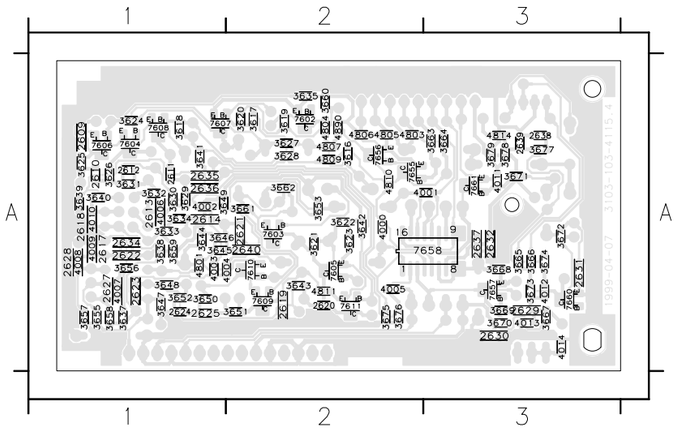

2609 A1 3626 A1 3666 A3 4814 A3
2610 A1 3627 A2 3667 A3 4890 A2
2611 A1 3628 A2 3668 A3 7602 A2
2612 A1 3629 A1 3669 A3 7603 A2
2613 A1 3630 A1 3670 A3 7604 A1
2614 A1 3631 A1 3671 A3 7605 A2
2617 A1 3632 A1 3672 A3 7606 A1
2618 A1 3633 A1 3673 A3 7607 A1
2619 A2 3634 A1 3674 A3 7608 A1
2620 A2 3635 A2 3675 A2 7609 A2
2621 A2 3637 A1 3676 A2 7610 A2
2622 A1 3638 A1 3677 A3 7611 A2
2623 A1 3639 A1 3678 A3 7655 A3
2624 A1 3640 A1 3679 A3 7656 A2
2625 A1 3641 A1 4000 A2 7657 A3
2627 A1 3642 A2 4001 A3 7658 A3
2628 A1 3643 A2 4002 A1 7660 A3
2629 A3 3644 A1 4003 A1 7661 A3
2630 A3 3645 A1 4004 A2
2631 A3 3646 A1 4005 A2
2632 A3 3647 A1 4006 A1
2634 A1 3648 A1 4007 A1
2635 A1 3649 A1 4008 A1
2636 A1 3650 A1 4009 A1
2637 A3 3651 A2 4010 A1
2638 A3 3652 A1 4011 A3
2639 A3 3654 A2 4012 A3
2640 A2 3655 A1 4013 A3
3616 A2 3656 A1 4014 A3
3617 A1 3658 A1 4801 A1
3618 A1 3659 A1 4803 A2
3619 A2 3660 A2 4804 A2
3620 A2 3661 A2 4805 A2
3621 A1 3662 A2 4806 A2
3622 A2 3663 A3 4807 A2
3623 A2 3664 A3 4809 A2
3624 A1 3665 A3 4810 A2
3625 A1 4811 A2

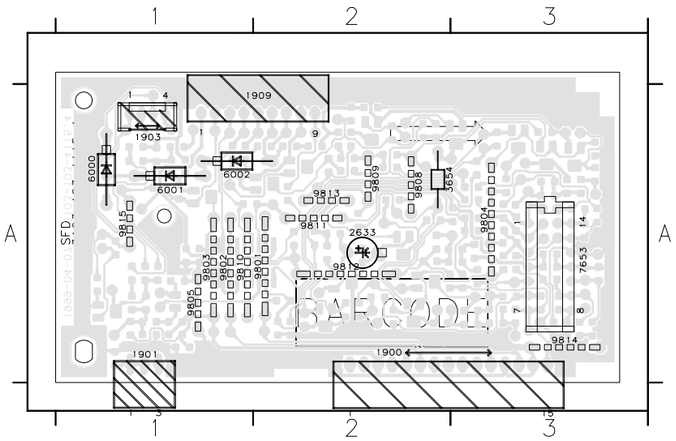

1900 A2
1901 A1
1903 A1
1909 A2
3654 A2
6000 A1
6001 A1
6002 A1
7653 A3
9801 A2
9802 A1
9803 A1
9804 A3
9805 A1
9808 A2
9809 A2
9810 A1
9811 A2
9812 A2
9813 A2
9814 A3

Mains Filter Board (MFSWD)

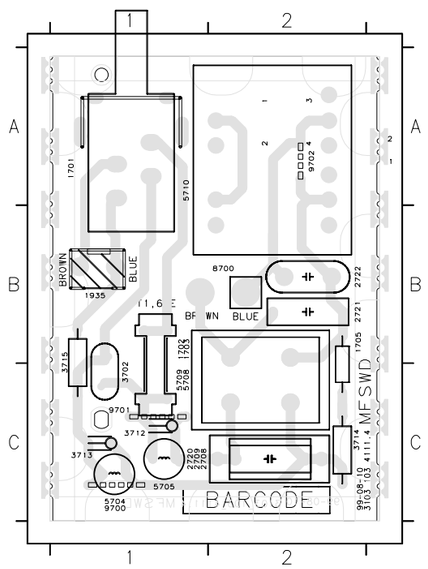

1701 A1
1702 C1
1703 C1
1705 C2
1935 B1
2705 C2
2709 C2
2720 C2
2721 B2
2722 B2
3702 C1
3712 C1
3713 C2
3714 C2
3715 B1
5704 C1
5705 C2
5708 C2
5709 C2
5710 A2
8700 B2
9700 C1
9701 C1
9702 A2

Audio Board (APDOD)

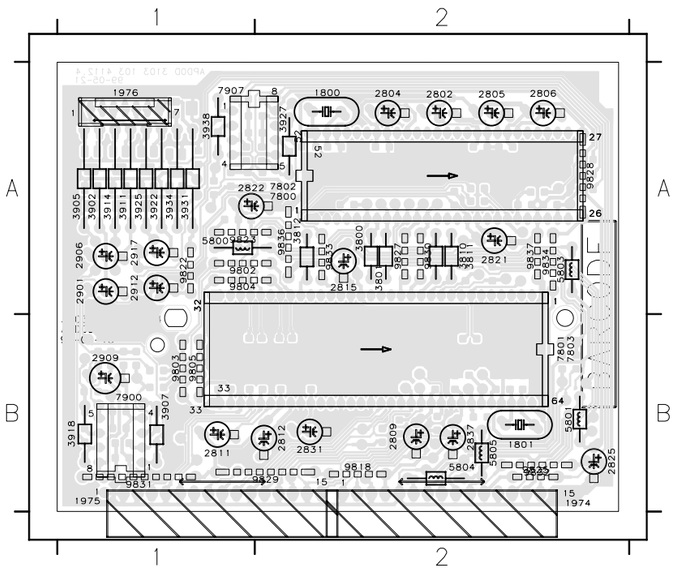

1800 A2 9803 B1
1801 B2 9804 A1
1974 B2 9805 B1
1975 B1 9818 B2
1976 A1 9822 A1
2802 A2 9823 A1
2804 A2 9825 B2
2805 A2 9827 A2
2806 A2 9828 A2
2809 B2 9829 B2
2811 B1 9830 A2
2812 B2 9831 B1
2815 A2 9832 B2
2821 A2 9833 A2
2822 A1 9834 A2
2825 A1 9835 B1
2831 B2 9836 A2
2837 B2 9837 A2
2901 A1
2906 B1
2909 B1
2912 A1
2917 A1
3800 A2
3801 A2
3810 A2
3811 A2
3812 A2
3902 A1
3905 A1
3907 B1
3911 A1
3914 A1
3918 B1
3922 A1
3925 A1
3927 A2
3931 A1
3934 A1
3938 A1
5800 A1
5801 B2
5803 A2
5804 B2
5805 B2
7800 A2
7801 B2
7802 A2
7803 B2
7900 B1
7907 A1
9802 A1

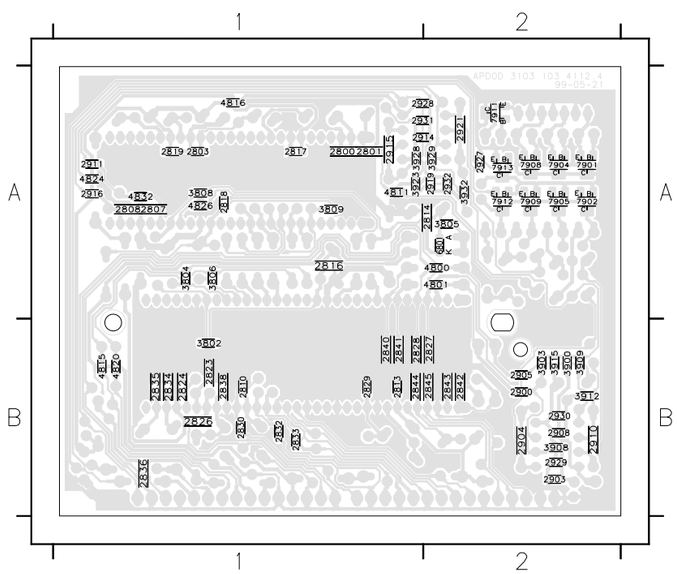

2800 A1 3806 A1
2801 A1 3808 A1
2803 A1 3809 A1
2807 A1 3900 B2
2808 A1 3903 B2
2810 B1 3908 B2
2813 B1 3909 B2
2814 A2 3912 B2
2816 A1 3915 B2
2817 A1 3923 A1
2818 A1 3928 A1
2819 A1 3929 A2
2823 B1 3932 A2
2824 B1 4811 A1
2826 B1 4815 B1
2827 B2 4816 A1
2828 B1 4820 B1
2829 B1 4824 A1
2830 B1 4826 A1
2832 B1 4832 A1
2833 B1 6801 A2
2834 B1 7901 A2
2835 B1 7902 A2
2836 B1 7904 A2
2838 B1 7905 A2
2840 B1 7908 A2
2841 B1 7909 A2
2842 B2 7911 A2
2843 B1 7912 A2
2844 B1 7913 A2
2845 B1 9800 A2
3801 B2 9801 A2
3802 B1
3804 A1
3805 A2

Service
Service
Service

14PV210

14PV210/01/07/39
14PV210/58/75/75S
14PV320/01/05/39
14PV325/05S/39S
14PV327/05B/39B
14PV340/01/05/39/58
14PV345/05S/39S
20PV220/01/07
21PV210/75/75S
21PV320/01/05/39
21PV520/58
25PV720/07/39
37TR215/03/39
51TR225/03/39
37TVB50/39
51TVB60/39

Evolution: AA

Service Manual

Contents

Chapter

1 Table of contents per page
Technical data
Description of controls and connections
Direction for use
Survey of abbreviations used

2 Service and caution notes
Adjustment procedures
Mechanical adjustment procedures
Circuit description
Electrical adjustment procedures

3 Interconnection wiring diagram
Block diagrams
Schematic diagrams

4 PCB layout

5 Tape deck exploded view
Mechanical parts list
Cabinet exploded view
Electrical parts list

Survey of versions:

/01/03	PAL B/G (with VPS)
/05	PAL I UK
/07(mono)	PAL I Ireland
/07(stereo)	PAL/SECAM B/G,D/K,K1,I,L,L'
/39	PAL/SECAM B/G,D/K,K1,I,L,L'
/58	PAL/SECAM B/G,D/K
/75	PAL B/G,I

Safety regulations require that the set is restored to its original condition and that parts which are identical to those specified are used.

Remote control:

14PV210/01/07/39/58/75/75S 14PV320/01/05/39 20PV220/01/07	RT790/101	8622 667 90101
14PV325/05S/39S 14PV327/05B/39B	RT791/101(silver)	8622 667 91101
21PV320/01/05/39 21PV520/58 25PV720/07/39 21PV210/75/75S	RT795/101	8622 667 95101
14PV340/01/05/39/58	RT796/101	8622 667 96101
14PV345/05S/39S	RT797/101(silver)	8622 667 97101
37TR215/03/39 51TR225/03/39 37TVB50/39 51TVB60/39	RT790/201	8622 667 90201

Tape Deck:

14PV210/01/07/39/75/75S 14PV320/01/05/39 14PV325/05S/39S 14PV327/05B/39B 14PV340/01/05/39/58 14PV345/05S/39S 20PV220/01/07 21PV210/75/75S 21PV320/01/05/39 37TR215/03/39, 37TVB50/39 51TR225/03/39, 51TVB60/39	WDQT-P2/0 LP
14PV210/58	WDQT-P2/0
21PV520/58	WDQT-S4/0
25PV720/07/39	WDQT-S4/2

Published by HS, Videq Service Department 9865 Printed in the Netherlands © Copyright reserved Subject to modification GB 3103 785 20010

PHILIPS

PHILIPS

TABLE OF CONTENTS

Page

Front page 1-1
Table of contents 1-2
Survey of sets and features 1-3
Survey of sets and boards 1-4

I. SUMMARY

A. Modifications, Technical data - Safety instructions 1-5
B. Direction for use 1-8
C. List of signal abbreviations 1-21

II. ADJUSTMENT PROCEDURES

A. Service and caution notes 2-1
B. Mechanical adjustment procedures 2-17
1. Dismantling cabinet parts 2-17
2. Procedure for cleaning the head drum 2-20
3. Adjustment procedures 2-21
C. Service tools and fixtures 2-34
D. Circuit description 2-35
E. Electrical adjustment procedures 2-56
1. Test equipment 2-56
2. How to read the adjustment procedures 2-56
3. Adjustment procedures 2-57

III. SCHEMATICS

Interconnection wiring diagram 3-1
Block diagram - Tuner1, TV 3-2
Block diagram - Power Supply, Large Signal,TXT 3-3
Block diagram - In/Out, Audio 3-4
Block diagram - Tuner2, Video 3-5
Block diagram - Central Control, Deck Electronics 3-6
TV Board (TVBAD)
Power Supply (PS) - Schematic diagram 3-7
Deflection (LS) - Schematic diagram 3-8
Tuner 1 (TU1) - Schematic diagram 3-9
TV Processing (TV) - Schematic diagram 3-10
Input/Output (IO_1) - Schematic diagram 3-11
View Selector Audio (SF) - Schematic diagram 3-12
Amplifier (AMP) - Schematic diagram 3-13
Teletext Controller (COTV) - Schematic diagram 3-14
Recorder Unit Board (RUBAD)
Power Supply (PS) - Schematic diagram 3-15
Central Control 1 (AIO1) - Schematic diagram 3-16
Central Control 2 (AIO2) - Schematic diagram 3-17
Deck Electronics (DE) - Schematic diagram 3-18
Clock, VPS, Buzzer (CVB) - Schematic diagram 3-19
Tuner 2 (TU2) - Schematic diagram 3-20
Sound Processing (AP) - Schematic diagram 3-21
FM-Audio Processing (AF) - Schematic diagram 3-22
Linear Audio Processing (AL) - Schematic diagram 3-23
Video Signal Processing (VS) - Schematic diagram 3-24
SECAM Processing (VSEC) - Schematic diagram 3-25
Head Amplifier (HA) - Schematic diagram 3-26
Headphone, Front-AV Board (HPAV)
Schematic diagram 3-27
CRT-Board (PT)
Schematic diagram 3-28
Audio Board (APDOD)
Pre Amplifier (ACO) - Schematic diagram 3-29
Audio Processing (AF2) - Schematic diagram 3-30
Sound Feature Board (SFD)
Schematic diagram 3-31
Cinch Out, Scart 2 Board (DOSCD)
Schematic diagram 3-32
Keys & Display Board (KB1D)
Schematic diagram 3-33
Key Board (KB2D)
Schematic diagram 3-34
Mainsfilter Board (MFSWD)
Schematic diagram 3-34
Variant list
Tuner 1 - TV Board (TVBAD) 3-35
Tuner 2- Recorder Unit Board (RUBAD) 3-36

IV. CIRCUIT BOARD DIAGRAMS

TV Board (TVBAD), CRT Board, HPAV Board, Switch Board
Components side 4-1
Cooper side 4-2
Audio Board (APDOD) 4-4
Recorder Unit Board (RUBAD)
Components side 4-5
Cooper side 4-6
Mainsfilter Board (MFSWD) 4-7
Sound Feature Board (SFD) 4-7
Cinch Out, Scart 2 Board (DOSCD) 4-8
Keys & Display Board (KB1D) 4-8

Wave form photographs 4-9

V. EXPLODED VIEWS AND PARTS LIST

1. Deck exploded view (top) 5-1
2. Deck exploded view (bottom) 5-2
3. Mechanical parts list 5-3
4. Exploded view set 5-4/5
5. Exploded view frame 5-6/7/8
6. Electrical parts list 5-9

SURVEY OF SETS AND FEATURES

	14PV210/01	14PV210/07	14PV210/39	14PV210/58	14PV210/75	14PV210/75S	14PV320/01	14PV320/05	14PV320/39	14PV325/05S	14PV325/39S	14PV327/05B	14PV327/39B	14PV340/01	
General															
Screen size	14"	14"	14"	14"	14"	14"	14"	14"	14"	14"	14"	14"	14"	14"	1
Mono	✓	✓	✓	✓	✓	✓	✓	✓	✓	✓	✓	✓	✓	✓	
Stereo															
Presets and Timer Back-up time	1year	1year	1year	1year	1year	1year	1year	1year	1year	1year	1year	1year	1year	1year	1y
Clock and Calendar Back-up time	30min	30min	30min	30min	4days	4days	30min	30min	30min	30min	30min	30min	30min	30min	30
Number of Presets	99	99	99	99	99	99	99	99	99	99	99	99	99	99	
Reception															
Number of Tuners	1	1	1	1	1	1	2	2	2	2	2	2	2	1	
NICAM															
PAL B/G	✓						✓							✓	
PAL B/G,D/K SECAM B/G,D/K				✓											
PAL I		✓						✓		✓		✓			
PAL B/G,I					✓	✓									
PAL B/G,I SECAM B/G,L/L'			✓						✓		✓		✓		
PAL B/G,D/K,I SECAM B/G,D/K,K1,L,L'															
Automatic Channel Install. (ACI)	✓	✓	✓	✓			✓	✓	✓	✓	✓	✓	✓	✓	
Auto Store +					✓	✓									
Sound															
Music Power Output MPO [Watts]	3	3	3	3	3	3	3	3	3	3	3	3	3	3	
Number of Speakers	1	1	1	1	1	1	1	1	1	1	1	1	1	1	
Virtual Dolby Surround															
Connectors		✓						✓		✓		✓			
Scart 1 plug (RGB Input)	✓	✓	✓	✓	✓	✓	✓	✓	✓	✓	✓	✓	✓	✓	
Scart 2 plug															
Cinch Stereo Rear out															
Audio/Video Side Connector	✓	✓	✓	✓	✓	✓	✓	✓	✓	✓	✓	✓	✓	✓	
Headphones Jack 3,5mm	✓	✓	✓	✓	✓	✓	✓	✓	✓	✓	✓	✓	✓	✓	
Teletext															
TXT (1 page memory)	✓	✓	✓	✓	✓	✓	✓	✓	✓	✓	✓	✓	✓	✓	
TXT (10 page memory)															
TOP															
FLOF	✓	✓	✓				✓	✓	✓	✓	✓	✓	✓	✓	
Time/Date Download (Smart Clock)	✓	✓	✓	✓	✓	✓	✓	✓	✓	✓	✓	✓	✓	✓	
Tape Deck															
Number of Video Heads	2	2	2	2	2	2	2	2	2	2	2	2	2	2	
Number of FM-Audio Heads															
Winding Time sec. (E180)	260	260	100	100	100	100	100	100	100	260	100	100	100	100	1
Rewind Time sec. (E180)	170	170	100	100	100	100	100	100	100	170	100	100	100	100	1
Autom. Tape Length Recogn.					✓	✓	✓	✓	✓	✓	✓	✓	✓	✓	
Video Longplay (2 head LP)	✓	✓	✓		✓	✓	✓	✓	✓	✓	✓	✓	✓	✓	
Video Longplay (4 head LP)															
Programming															
VPS/PDC	✓	✓	✓	✓			✓	✓	✓	✓	✓	✓	✓	✓	
Gemstar ShowView	✓		✓	✓		✓	✓		✓		✓		✓	✓	
Gemstar VideoPlus		✓						✓		✓		✓			
Color of set															
Grey	✓	✓	✓	✓	✓	✓	✓	✓	✓					✓	
Black															
Blue Metallic												✓	✓		
Silver										✓	✓				
Titanium															
On Tape standard															
MESECAM			✓	✓					✓		✓		✓		
PAL	✓	✓	✓	✓	✓	✓	✓	✓	✓	✓	✓	✓	✓	✓	
SECAM			✓						✓		✓		✓		
Features															
Child Lock	✓	✓	✓	✓	✓	✓	✓	✓	✓	✓	✓	✓	✓	✓	
VCR1/VCR remote address selection															
Hotel Mode	✓	✓	✓	✓	✓	✓	✓	✓	✓	✓	✓	✓	✓	✓	
NTSC 3,58 via Scart-IN					✓	✓									
Wide screen switching (manually)							✓	✓	✓	✓	✓	✓	✓	✓	
Edge Noise Canceller	✓	✓	✓	✓	✓	✓	✓	✓	✓	✓	✓	✓	✓	✓	
Record Prepared Scart 1															
Digital Studio Picture Control	✓	✓	✓	✓	✓	✓	✓	✓	✓	✓	✓	✓	✓	✓	
NTSC-Playback in color (HIFI)															
NTSC-Playback in color	✓	✓	✓	✓	✓	✓	✓	✓	✓	✓	✓	✓	✓	✓	
FM-Radio														✓	
Buzzer														✓	

14PV340/05	14PV340/39	14PV340/58	14PV345/05S	14PV345/39S	20PV220/01	20PV220/07	21PV210/75	21PV210/75S	21PV320/01	21PV320/05	21PV320/39	21PV520/58	25PV720/07	25PV720/39	37TR215/03	37TR215/39	37TVB50/39	51TR225/03	51TR225/39	51TVB60/39
4"	14"	14"	14"	14"	20"	20"	21"	21"	21"	21"	21"	21"	25"	25"	14"	14"	14"	20"	20"	20"
✓	✓	✓	✓	✓	✓	✓	✓	✓	✓	✓	✓	✓			✓	✓	✓	✓	✓	✓
													✓	✓						
ear	1year	1year	1year	1year	1year	1year	1year	1year	1year	1year	1year	1year	1year	1year	1year	1year	1year	1year	1year	1year
min	30min	30min	30min	30min	30min	30min	4days	4days	4days	4days	4days	4days	4days	4days	30min	30min	30min	30min	30min	30min
99	99	99	99	99	99	99	99	99	99	99	99	99	99	99	99	99	99	99	99	99
1	1	1	1	1	2	2	1	1	2	2	2	2	2	2	1	1	1	2	2	2
													✓	✓						
					✓				✓						✓			✓		
		✓										✓								
✓			✓			✓				✓										
	✓			✓			✓	✓			✓					✓	✓		✓	✓
													✓	✓						
✓	✓	✓	✓	✓	✓	✓			✓	✓	✓	✓	✓	✓						
		✓					✓	✓							✓	✓	✓	✓	✓	✓
3	3	3	3	3	5	5	5	5	5	5	5	5	20	20	3	3	3	5	5	5
1	1	1	1	1	1	1	1	1	2	2	2	2	2	2	1	1	1	1	1	1
													✓	✓						
✓			✓			✓				✓			✓							
✓	✓	✓	✓	✓	✓	✓	✓	✓	✓	✓	✓	✓	✓	✓	✓	✓	✓	✓	✓	✓
									✓	✓	✓	✓	✓	✓						
													✓	✓						
✓	✓	✓	✓	✓			✓	✓	✓	✓	✓	✓	✓	✓						
✓	✓	✓	✓	✓	✓	✓	✓	✓	✓	✓	✓	✓	✓	✓	✓	✓	✓	✓	✓	✓
✓	✓	✓	✓	✓	✓	✓	✓	✓										✓	✓	✓
									✓	✓	✓	✓	✓	✓						
									✓	✓	✓	✓	✓	✓						
✓	✓		✓	✓	✓	✓			✓	✓	✓	✓	✓	✓						
✓	✓	✓	✓	✓	✓	✓	✓	✓	✓	✓	✓	✓	✓	✓	✓	✓	✓	✓	✓	✓
2	2	2	2	2	2	2	2	2	2	2	2	4	2	2	2	2	2	2	2	2
2			2																	
00	260	100	260	260	260	260	100	100	100	100	100	100	100	100	260	260	260	260	260	260
00	170	100	170	170	170	170	100	100	100	100	100	100	100	100	170	170	170	170	170	170
✓	✓	✓	✓	✓			✓	✓	✓	✓	✓	✓	✓	✓						
✓	✓	✓	✓	✓	✓	✓	✓	✓	✓	✓	✓		✓	✓	✓	✓	✓	✓	✓	✓
												✓								
✓	✓	✓	✓	✓	✓	✓			✓	✓	✓	✓	✓	✓	✓	✓	✓	✓	✓	✓
	✓	✓		✓	✓			✓	✓		✓	✓		✓	✓	✓	✓	✓	✓	✓
✓			✓			✓				✓			✓							
✓	✓	✓			✓	✓	✓	✓	✓	✓	✓	✓								
															✓	✓	✓	✓	✓	✓
			✓	✓																
													✓	✓						
	✓	✓		✓							✓	✓		✓		✓	✓		✓	✓
✓	✓	✓	✓	✓	✓	✓	✓	✓	✓	✓	✓	✓	✓	✓	✓	✓	✓	✓	✓	✓
	✓			✓							✓			✓		✓	✓		✓	✓
✓	✓	✓	✓	✓	✓	✓	✓	✓	✓	✓	✓	✓	✓	✓	✓	✓	✓	✓	✓	✓
									✓	✓	✓	✓	✓	✓						
✓	✓	✓	✓	✓	✓	✓	✓	✓	✓	✓	✓	✓	✓	✓	✓	✓	✓	✓	✓	✓
							✓	✓	✓	✓	✓	✓								
✓	✓	✓	✓	✓	✓	✓			✓	✓	✓	✓	✓	✓						
✓	✓	✓	✓	✓	✓	✓	✓	✓	✓	✓	✓	✓	✓	✓	✓	✓	✓	✓	✓	✓
									✓	✓	✓		✓	✓						
✓	✓	✓	✓	✓	✓	✓	✓	✓	✓	✓	✓	✓								
													✓	✓						
✓	✓	✓	✓	✓	✓	✓	✓	✓	✓	✓	✓	✓								
✓	✓	✓	✓	✓																
✓	✓	✓	✓	✓																

SURVEY OF THE BOARDS

Recorder Unit Board	RUBAD1	RUBAD2	RUBAD3	RUBAD4	RUBAD5	RUBAD6	RUBAD7	RUBAD8	RUBAD9	RUBAD10	RUBAD11	RUBAD12	RUBAD13	RUBAD15	RUBAD16	RUBAD18	RUBAD19	TV-Board	TVBAD14/BG	TVBAD14/BGI	TVBAD14/BGL	TVBAD14/BGLO	TVBAD14/BGLR	TVBAD14/BGLT	TVBAD14/BGO	TVBAD14/BGR	TVBAD14/BGT	TVBAD14/DK	TVBAD14/DKP
14PV210/01	✓																		✓										
14PV210/07	✓																												
14PV210/39			✓																		✓								
14PV210/58	✓																											✓	
14PV210/75		✓																		✓									
14PV210/75S		✓																		✓									
14PV320/01													✓														✓		
14PV320/05															✓														
14PV320/39																	✓							✓					
14PV325/05S															✓														
14PV325/39S																	✓							✓					
14PV327/05B															✓														
14PV327/39B																	✓							✓					
14PV340/01					✓																					✓			
14PV340/05					✓																								
14PV340/39						✓																	✓						
14PV340/58					✓																								✓
14PV345/05S					✓																								
14PV345/39S						✓																	✓						
20PV220/01														✓															
20PV220/07																✓													
21PV210/75		✓																											
21PV210/75S		✓																											
21PV320/01									✓																				
21PV320/05							✓																						
21PV320/39										✓																			
21PV520/58								✓																					
25PV720/07											✓																		
25PV720/39											✓																		
37TR215/03				✓																					✓				
37TR215/39				✓																		✓							
37TVB50/39				✓																		✓							
51TR225/03														✓															
51TR225/39												✓																	
51TVB60/39												✓																	

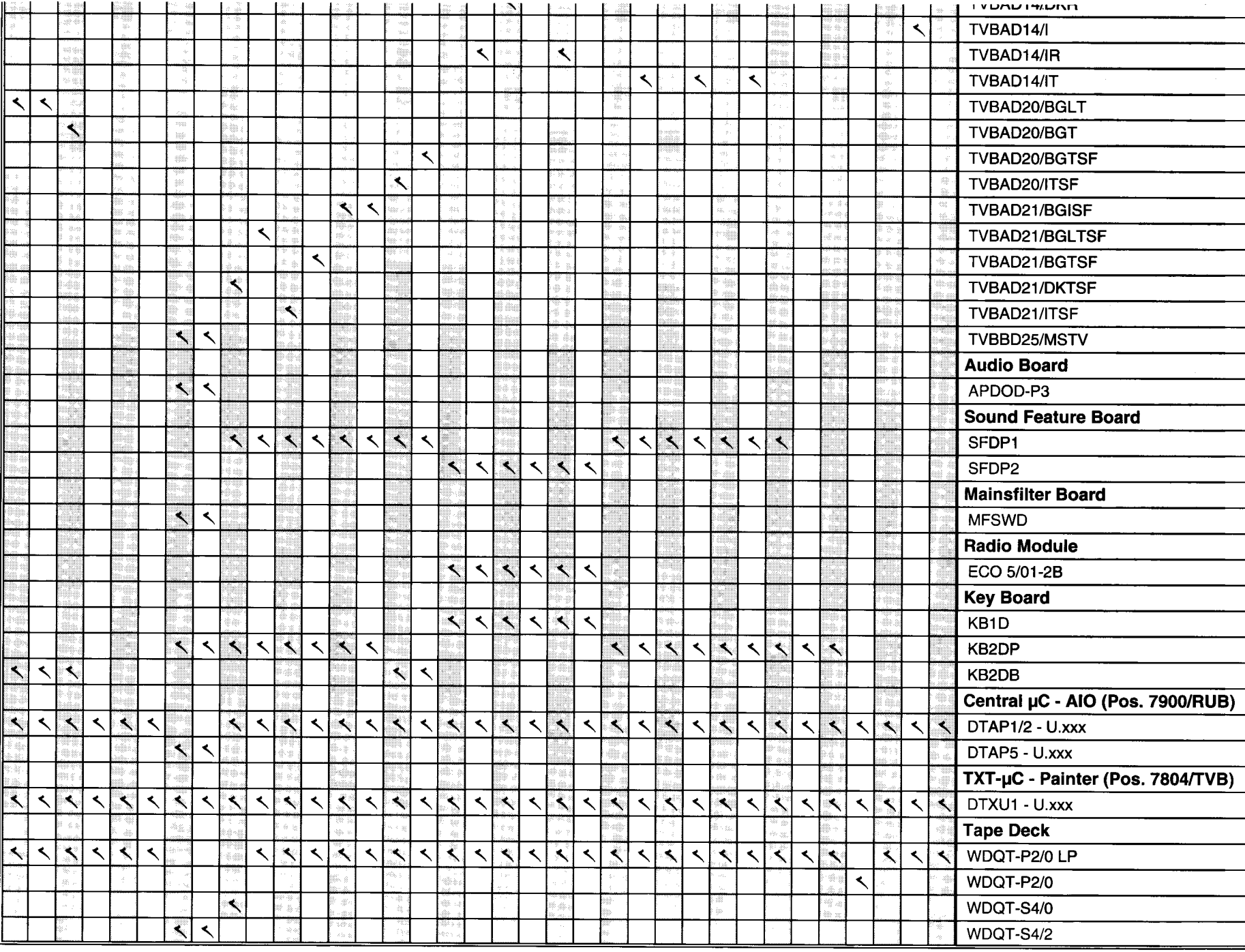

TVBAD14/DKR
TVBAD14/I
TVBAD14/IR
TVBAD14/IT
TVBAD20/BGLT
TVBAD20/BGT
TVBAD20/BGTSF
TVBAD20/ITSF
TVBAD21/BGISF
TVBAD21/BGLTSF
TVBAD21/BGTSF
TVBAD21/DKTSF
TVBAD21/ITSF
TVBBD25/MSTV
Audio Board
APDOD-P3
Sound Feature Board
SFDP1
SFDP2
Mainsfilter Board
MFSWD
Radio Module
ECO 5/01-2B
Key Board
KB1D
KB2DP
KB2DB
Central µC - AIO (Pos. 7900/RUB)
DTAP1/2 - U.xxx
DTAP5 - U.xxx
TXT-µC - Painter (Pos. 7804/TVB)
DTXU1 - U.xxx
Tape Deck
WDQT-P2/0 LP
WDQT-P2/0
WDQT-S4/0
WDQT-S4/2

I. SUMMARY
A. MODIFICATIONS

1. UPDATING THE SERVICE MANUAL

All modifications and/or supplements to the Service Manual are published by means of Service Information bulletins.

Each Service Information is numbered:

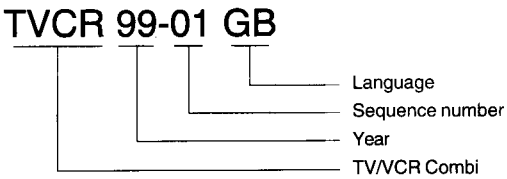

A Service Information bulletin consists of a front page which, if needed, is followed by supplementary and/or replacement sheets.

Replacement sheets should replace existing sheets in the Service Manual. These sheets are identified by an additional letter after the page number.
Example: Page 5-1a replaces page 5-1 in the Service Manual.

Supplementary sheets should be inserted between existing sheets in the Service Manual. These sheets are identified by an additional figure after the page number.
Example: Page 5-1-1 should be inserted after page 5-1.

2. MODIFICATIONS IN THE SET

All important parts of the set (such as the tape deck, the printed circuits and modules) are equiped with a sticker.
Those stickers provide a number of important information.

• Type plate

The type plate is located on the back cover.

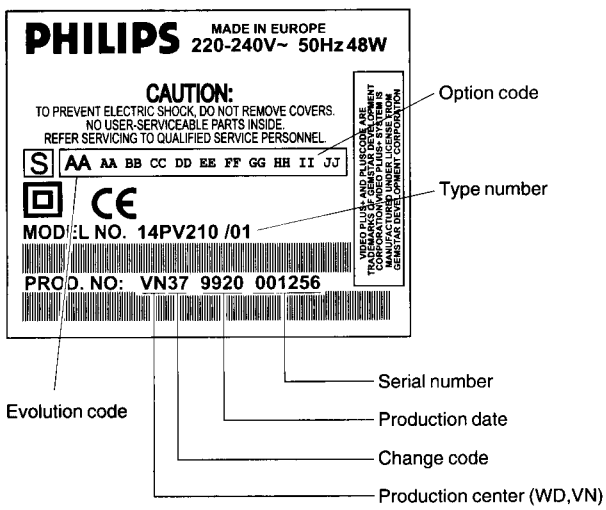

Note :
• In case of an important change in the set, the production code on the type plate is incremented: E.g. 37 becomes 38.
• In case of a major change in the set, the evolution code is incremented: E.g. AA becomes AB.

• Tape deck

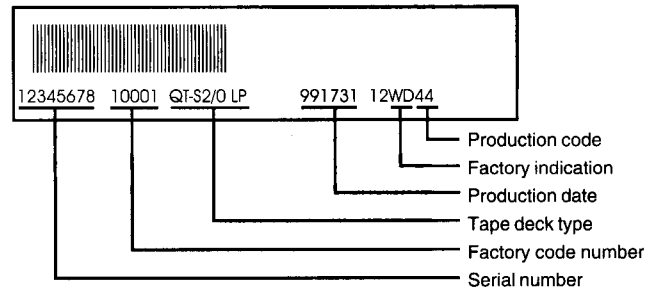

Note :
The production code and the serial number on the tape deck do not correspond to the production code and the serial number on the type plate.

• Printed circuits

The sticker is generally located on the copper side of the board.

Example :

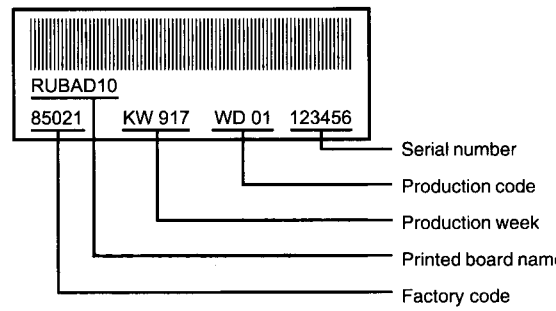

Note :
The production code number might not always be mentioned.

In case of an important modification, the last figure of the factory code number (point number) is increased by one: E.g. 8502.1 becomes 8502.2.

(I) Avvertimenti

• Le prescrizioni di sicurezza richiedono che l'apparecchio sia ricondotto alle condizioni originali e che siano usati ricambi originali. Componenti di sicurezza sono marcati con ⚠

• Tutti gli IC e semiconduttori sono sensibili a scariche elettrostatiche (ESD). Noncuranze durante la riparazione di semiconduttori possono danneggiarli o condurre ad una riduzione drastica della durata. Durante la riparazione assicurarsi di essere collegati allo stesso potenziale attraverso un bracciale di protezione contro scariche elettrostatiche. Inoltre tenere anche tutti i componenti e gli attrezzi a questo potenziale.
• Apparecchi dà riparare bisogna collegarli sempre via un trasformatore isolante (separatore) alla tensione normale.
– Non scambiare moduli o altri componenti quando l'apparecchio è in funzione.
• Per l'accordo usare soltanto attrezzi di plastica (non usare attrezzi metallici). Cosí si evitano cortocircuiti e collegamenti instabili.

Osservazioni

• Misurare le tensioni continue e gli oscillogrammi riferiendosi alla massa dell'apparecchio.
• Le tensioni continue e gli oscillogrammi indicati negli schemi di collegamento devono essere misurati secondo le condizioni seguenti: segnale barre colore, portante dell'immagine su: 503.25 MHz (C25).
• Gli oscillogrammi e le tensioni continue sono misurati in RECORD o PLAYBACK.
• I componenti indicati nelle liste sono intercambiabili con quelli nell'apparecchio nonostante l'eventuale denominazione di modelli.

(E) Avisos

• Las instrucciones de seguridad exigen que después de la reparación el aparato se encuentre en el estado original y que las piezas de repuesto, utilizadas para la reparación, sean idénticas a las originales.
Los componentes de seguridad estan marcados con ⚠

• Todos los IC y semiconductores son sensibles a descargas electrostáticas (ESD). Un tratamiento no conforme a las instrucciones de semiconductores en caso de reparación, podría llevar a la destrucción de estos componentes, o a una reducción drástica de la duración. Tenga cuidado de que, en caso de reparación, estar al mismo potencial que la masa del aparato, por una pulsera con resistencia. Ponga todos los componentes, herramientas y recursos al mismo potencial.
• Para reparar un aparato hay que conectarlo siempre a la alimentación a traves de un transformador de aislamiento.
• Cuando un aparato está en marcha no pueden ser cambiados módulos u otras piezas de repuesto.
• Para los ajustes hay que utilizar exclusivamente herramientas de plástico (nunca herramientas metálicas). Así se evitaran cortocircuitos y circuitos inestables.

Notas

• Hay que medir las tensiones continuas y los oscilogramas contra la masa del aparato.
• Las tensiones continuas y los oscilogramas mencionados en los esquemas tienen que ser medidos de manera siguiente: señal barra de color portadora de imagen en 503.25MHz (C25)
• Los oscilogramas y las tensiones continuas son medidas en „RECORD" y „PLAYBACK"
• Los componentes mencionados en las listas se los puede cambiar por los componentes en el aparato, a pesar de eventuales designaciones de tipos.

(GB) TECHNICAL DATA	(D) TECHNISCHE DATEN	(F) CARACTERISTIQUES	
Mains voltage	Netzspannung	Tension secteur	198 - 264 V
Mains frequency	Netzfrequenz	Fréquence	45 - 65 Hz
Power consumption	Leistungsaufnahme	Puissance absorbée	14": 44W, 20": 53W 21": 65W, 25": 80W Stand By: < 4W
Ambient temperature	Raumtemperatur	Température ambiante	+10°C to +35°C
Relative humidity	Relative Luftfeuchtigkeit	Humidité relative	20 - 80 %
Dimensions	Abmessungen	Encombrement	14": 392 x 398 x 407mm (W/H/D) 20/21": 510 x 505 x 482mm 25": 580 x 573 x 460mm
Weight	Gewicht	Poids	14": 13kg, 20": 21kg 21": 23kg, 25": 32kg
Fast forward/rewind time	Vor-/Rückspulzeit	Temps (re-)bobinage	260/170s, 100/100s (E180)
Video resolution	Video-Auflösung	Résolution vidéo	>240 lines
Audio	Audio	Audio SP:	80Hz - 10kHz (±8dB)
		Audio LP:	80Hz - 5kHz (±8dB)
		FM Audio	20Hz - 20kHz (±3dB)

(NL) TECHNISCHE GEGEVENS	(E) DATOS TECNICOS	(I) DATI TECNICI	
Netspanning	Tensión de red	Tensione di alimentazione	198 - 264 V
Netfrequentie	Frecuencia de red	Frequenza di rete	45 - 65 Hz
Opgenomen vermogen	Consumo de potencia	Potenza assorbita	14": 44W, 20": 53W 21": 65W, 25": 80W Stand By: < 4W
Omgevingstemperatuur	Temperatura ambiente	Temperatura ambiente	+10°C to +35°C
Relatieve vochtigheid	Humedad relativa	Umiditá relativa	20 - 80 %
Afmetingen	Dimensiones	Dimensioni	14": 392 x 398 x 407mm (W/H/D) 20/21": 510 x 505 x 482mm 25": 580 x 573 x 460mm
Gewicht	Peso	Peso	14": 13kg, 20": 21kg 21": 23kg, 25": 32kg
Vooruit/terugspoeltijd	tiempo de (re-)bobinado	Tempo di (ri-)avvolgimento	260/170s, 100/100s (E180)
Opplossend vermogen	Resolución video	Risoluzione video	>240 lines
Audio	Audio	Audio SP:	80Hz - 10kHz (±8dB)
		Audio LP:	80Hz - 5kHz (±8dB)
		FM Audio	20Hz - 20kHz (±3dB)

(GB) Safety instructions

• Safety regulations demand that the set be restored to its original condition and that components identical with the original types be used.
Safety components are marked by the symbol ⚠

• All ICs and many other semi-conductors are susceptible to electrostatic discharges (ESD). Careless handling during repair may reduce life drastically. When repairing, make sure that you are conneted with the same potential as the mass of the set via a wrist wrap with resistance. Keep components and tools on the same potential.
• A set to be repaired should always be connected to the mains via a suitable isolating transformer.
• Never replace any modules or any other parts while the set is switched on.
• Use plastic instead of metal alignment tools. This in order to prelude short-circuit or to prevent a specific circuit from being rendered unstable.

Remarks

• The direct voltages and oscillograms ought to be measured relative to the set mass.
• The direct voltages and oscillograms mentioned in the diagrams ought to be measured with a colour bar signal and the picture carrier at 503.25 MHz (C25).
• The oscillograms and direct voltages have been measured in RECORD or PLAY mode.
• The semiconductors, which are mentioned in the circuit diagram and in the parts lists, are fully exchangeable per position with the semiconductors in the set, irrespective of the type designation of these semiconductors.

(F) Avertissements

• Les normes de sécurité exigent qu'après réparation, l'appareil soit remis dans son état d'origine et que soient utilisées les pièces détachées d'origine.
Les composants de sécurité sont marqués ⚠

• Tous les circuits intégrés, ainsi que beaucoup d'autres semi-conducteurs, sont sensibles aux décharges statiques (ESD). Leur longévité pourrait être considérablement écourtée si aucune précaution n'est prise pendant leur manipulation. Lors de réparations, assurez vous de bien être relié au même potentiel que la masse de l'appareil et enfilez un bracelet serti d'une résistance de sécurité. Veiller à ce que les composants ainsi que les outils que vous utilisez soient également à ce potentiel.
• Veiller à toujours alimenter un appareil à réparer à travers un transformateur d'isolement.
• Ne jamais remplacer de modules ni d'autres composants quand l'appareil est sous tension.
• Pour les réglages, utiliser des outils en plastique plutôt que des instruments métalliques; ceci afin d'éviter les court-circuits et d'exclure l'instabilité dans certains circuits.

Observations

• La mesure des tensions continues et des oscillogrammes doit se faire par rapport à la masse de l'appareil.
• Les tensions continues et les oscillogrammes figurant sur les schémas ont été relevés avec une mire de barre couleur modulée sur 503.25 MHz (C25).
• Les oscillogrammes et les tensions sont mesurés en mode ENREGISTREMENT ou LECTURE.
• Pour un repère donné, les composants indiqués dans la nomenclature sont complètement interchangeables avec ceux montés dans l'appareil, et ce quelles que soient les indications de type ou de désignation portées sur ces composants.

(D) Sicherheitshinweise

• Die Sicherheitsvorschriften erfordern es, daß sich das Gerät nach der Reparatur in seinem originalen Zustand befindet und daß die zur Reparatur benutzten Ersatzteile mit den Originalersatzteilen identisch sind.
Sicherheits-Bauteile sind mit der Markierung ⚠ versehen.

• Alle IC's und Halbleiter sind empfindlich gegen elektrostatische Entladungen (ESD). Unvorschriftmässige Behandlung von Halbleitern im Reparaturfall kann zur Zerstörung dieser Bauteile oder zu einer drastischen Reduzierung der Lebensdauer führen. Sorgen Sie dafür, daß Sie sich im Reparaturfall über ein Armband mit Widerstand auf dem gleichen Potential, wie die Masse des Gerätes befinden. Alle Bauteile, Werkzeuge und Hilfsmittel sind auf das gleiche Potential zu legen.
• Ein zu reparierendes Gerät ist immer über einen Trenntransformator an die Netzspannung anzuschließen.
• Bei eingeschaltetem Gerät dürfen keine Module oder sonstige Einzelteile ausgetauscht werden.
• Zum Abgleich sind ausschließlich Kunststoffwerkzeuge zu benutzen (keine Metallwerkzeuge verwenden). Dadurch wird vermieden, daß ein Kurzschluß entstehen kann oder eine Schaltung instabil wird.

Anmerkungen

• Die Gleichspannung und Oszillogramme sind gegen Gerätemasse zu messen.
• Die Gleichspannungen und Oszillogramme angeführt in den Schaltbildern sollen unter folgenden Bedingungen gemessen werden: Farbbalkensignal, Bildträger auf 503.25 MHz (C25)
• Die Oszillogramme und Gleichspannungen sind in RECORD oder PLAY gemessen. Die in den Stücklisten aufgeführten Bauteile sind positionsweise voll auswechselbar gegen die Bauteile in dem Gerät, ungeachtet der etwaigen Typenbezeichnungen.

(NL) Veiligheidsinstructies

• Veiligheidsbepalingen vereisen, dat het apparaat in zijn oorspronkelijke toestand wordt teruggebracht en dat onderdelen, indentiek aan de oorspronkelijke, worden toegepast.
De veiligheidsonderdelen zijn aangeduid met het symbool ⚠

• Alle IC's en vele andere halfgeleiders zijn gevoelig voor elektrostatische ontladingen (ESD). Onzorgvuldig behandelen tijdens reparatie kan de levensduur drastisch doen verminderen. Zorg ervoor, dat U tijdens reparatie via een polsband met weerstand verbonden bent met hetzelfde potentiaal als de massa van het apparaat. Houd componenten en hulpmiddelen ook op ditzelfde potentiaal.
• Sluit een apparaat dat gerepareerd wordt altijd via een scheidingstransformator aan op de netspanning.
• Verwissel nooit modules of andere onderdelen terwijl het apparaat is ingeschakeld.
• Gebruik voor het afregelen plastic i.p.v metalen gereedschap. Dit om mogelijke kortsluiting te voorkomen of een bepaalde schakeling instabiel te maken.

Opmerkingen

• De gelijksspanningen en oscillogrammen dienen gemeten te worden ten opzichte van de apparaat aarde.
• De gelijksspanningen en oscillogrammen vermeld in de schema's dienen gemeten te worden met een kleurbalkensignaal beelddraaggolf op 503.25 MHz (C25).
• De oscillogrammen en gelijksspanningen zijn in RECORD of PLAY mode gemeten.
• De halfgeleiders, die in het pricipeschema en in de stuklijsten, zijn vermeld, zijn per positie volledig uitwisselbaar met de halfgeleiders in het apparaat, ongeacht de typeaanduiding op deze halfgeleiders.

B. OPERATING INSTRUCTIONS

1. CONNECTING YOUR TV-VIDEO COMBI 1-12

Connecting the cables 1-12
Connecting a decoder or other equipment 1-12

2. INSTALLING YOUR TV-VIDEO COMBI 1-12

Initial installation 1-12
Allocating a decoder 1-13
Manual TV channel search 1-13
Manual radio channel search 1-13
Satellite receiver 1-13
Automatic TV channel search 1-13
Channel Number Allocation 1-14
Delete a TV Channel 1-14
Setting the language 1-14
Setting the country 1-14
Setting the time and date 1-14

3. IMPORTANT NOTES FOR OPERATION 1-15

SUMMARY OF USER GUIDE 1-15
User guide (OSD) 1-15

4. TV SET FUNCTIONS 1-15

Selecting a TV programme 1-15
Automatic volume control (AUTO VOLUME CONTROL) 1-15

5. RADIO FUNCTIONS 1-16

Selecting a radio channel 1-16
Searching a radio channel 1-16

6. PLAYBACK FUNCTIONS 1-16

Playing a cassette 1-16
Playing NTSC cassettes 1-16
Tape position indication 1-16
Searching for tape position with the picture (picture search) 1-16
Still picture 1-16
Searching for tape position without the picture (wind and rewind) 1-16
Instant View 1-16
Automatic search for a tape position (index search) 1-16
Picture interference 1-17
Cleaning the video heads 1-17

7. MANUAL RECORDING 1-17

Recording without automatic switch-off 1-17
Recording with automatic switch-off (OTR one-touch-recording) 1-17
Protecting your recordings 1-17
Auto-assembling 1-17

8. PROGRAMMED RECORDING (TIMER) 1-18

'VPS' (Video Programming System) and 'PDC' (Programme Delivery Control) 1-18
Programming a recording (with 'VIDEOplus') 1-18
Programming a recording (without 'VIDEOPlus') 1-18
How to check or change a TIMER 1-19

9. ADDITIONAL FUNCTIONS 1-19

How to read TELETEXT 1-19
Changing the TV system 1-19
Parental control 1-19
Switching the On-screen display (OSD) on or off 1-20
Continuous playback 1-20
Switch off function (SLEEPTIMER) 1-20
Switch on function (WAKE-UP TIMER) 1-20

OPERATING INSTRUCTIONS IN BRIEF

The remote control

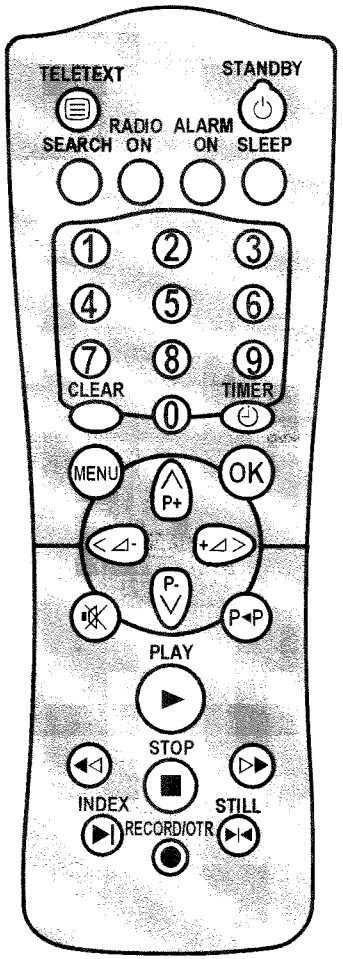

TELETEXT **TELETEXT**: To switch TELETEXT on or off

STANDBY **Switch off** : To switch off set, interrupt menu function, interrupt a programmed recording (TIMER)

RADIO SEARCH **Search for radio stations**

RADIO ON **Radio**: To switch the radio on or off

ALARM ON **Alarm**: To switch the buzzer off

SLEEP **Alarm**: To switch off the alarm. After ten minutes the alarm will switch on again

0-9 **Number buttons**: 0 - 9

CLEAR **Delete** : To delete last entry or clear programmed recording (TIMER)

TIMER **TIMER**: To make a manual TIMER programming or to alter or clear a programmed TIMER

MENU **Menu** : To call up or end main menu

OK **Store/Confirm**: To store or confirm entry

P+/−▲▼ **Programme number**: To select a programme number up or down

P−▼ **Select**: One line up

▲P+ **Select**: One line down

◿+/−◀▶ **Volume**: To regulate the volume

◀◿− **Select**: Cursor left

+◿▶ **Select**: Cursor right

Volume off: To switch the volume on or off

P◂P **Previous programme number**: To select the previous programme number

PLAY ▶ **Playback** : To play a recorded cassette

◀◀ **Rewind** : During STOP and STANDBY: rewind, during PLAYBACK: reverse scanning

STOP ■ **Pause/Stop**: To stop the tape, except while a TIMER-recording is being made

▶▶ **Forward wind**: During STOP and STANDBY: forward wind, during PLAYBACK: forward scanning

INDEX ▶| **Index search**: In combination with

RECORD/OTR ● **Record**: To record the programme selected

STILL ▶|◀ **Still picture**: To stop the tape and show a still picture

Back of the set

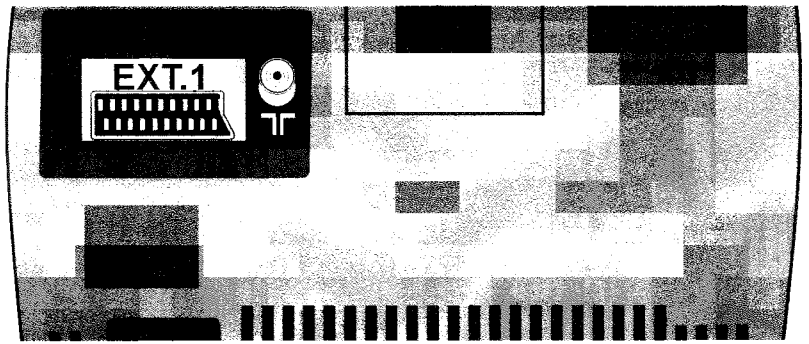

EXT.1 **Scart socket**: To connect a satellite receiver, decoder, video recorder, etc.

Aerial input socket: To connect the aerial cable

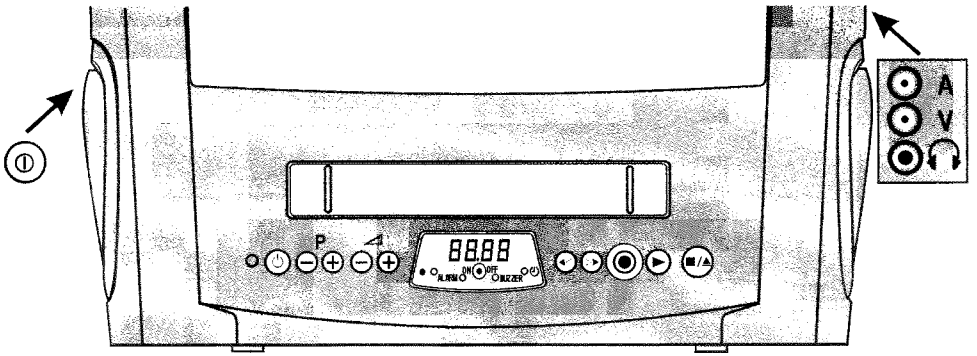

14PV320, 14PV340,
14PV347, 14PV325,
14PV327

Front of the set

Power switch : To switch off the set
Beware: When you switch the set off with the power switch, TIMER-recordings are not possible!

Standby : To switch off, interrupt a function, interrupt a programmed recording (TIMER)

P +/− **Programme number** : To select programme number up or down

◿ +/− **Volume**: To regulate the volume

Rewind : During STOP and STANDBY: rewind, during PLAYBACK: reverse scanning

Forward wind: During STOP and STANDBY: forward wind, during PLAYBACK: forward scanning

Record: To record the programme selected

Playback : To play a recorded cassette

Pause/Stop, eject cassette: To stop the tape and during STOP eject the cassette

A **Audio input socket**

V **Video input socket** : To connect a camcorder or videogames

Headphones socket: To connect headphones

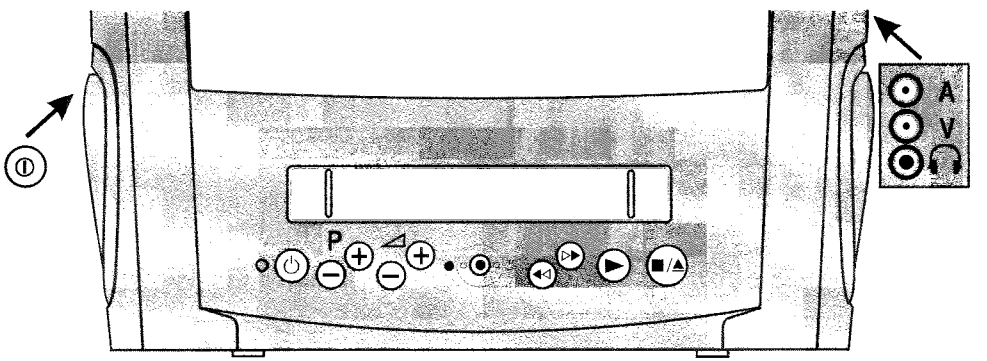

14PV210

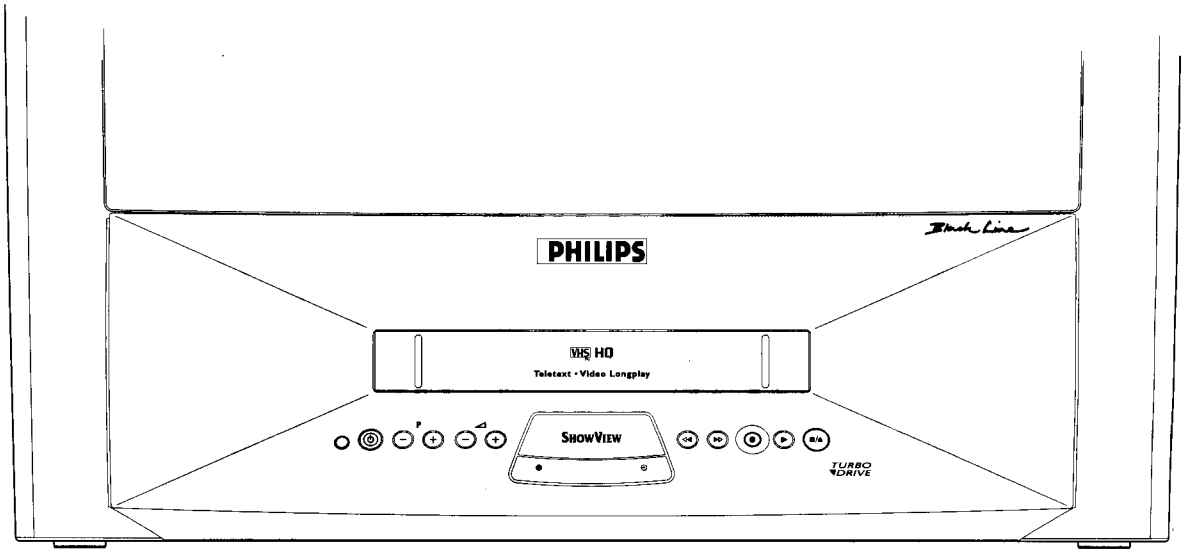

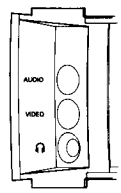

21PV210, 21PV320, 25PV720

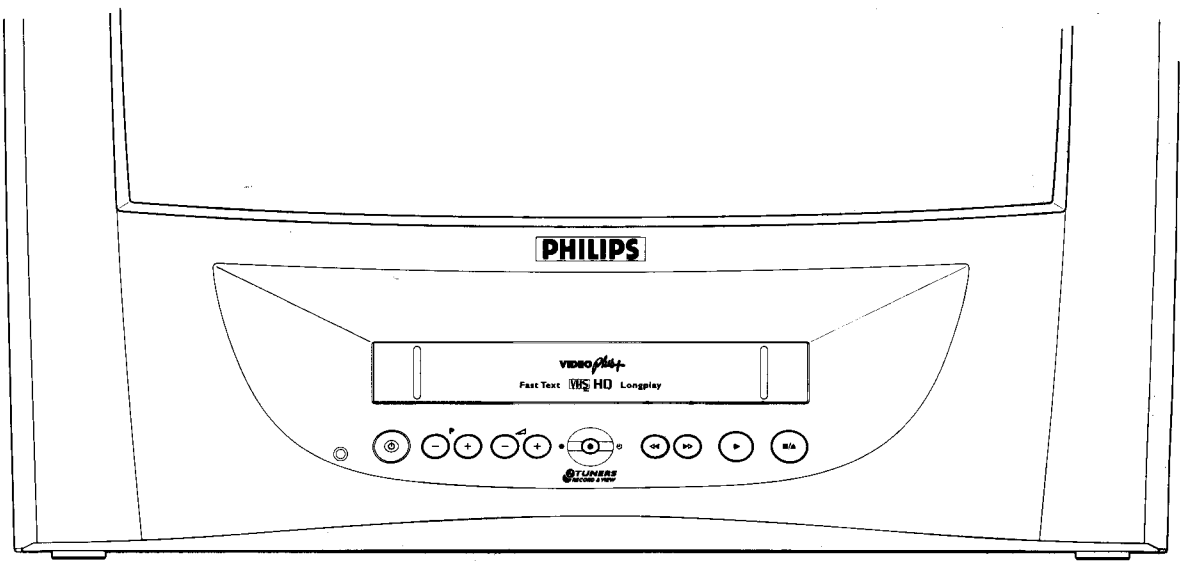

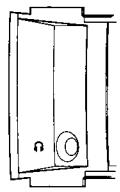

Nat. Brand 20",
20PV220

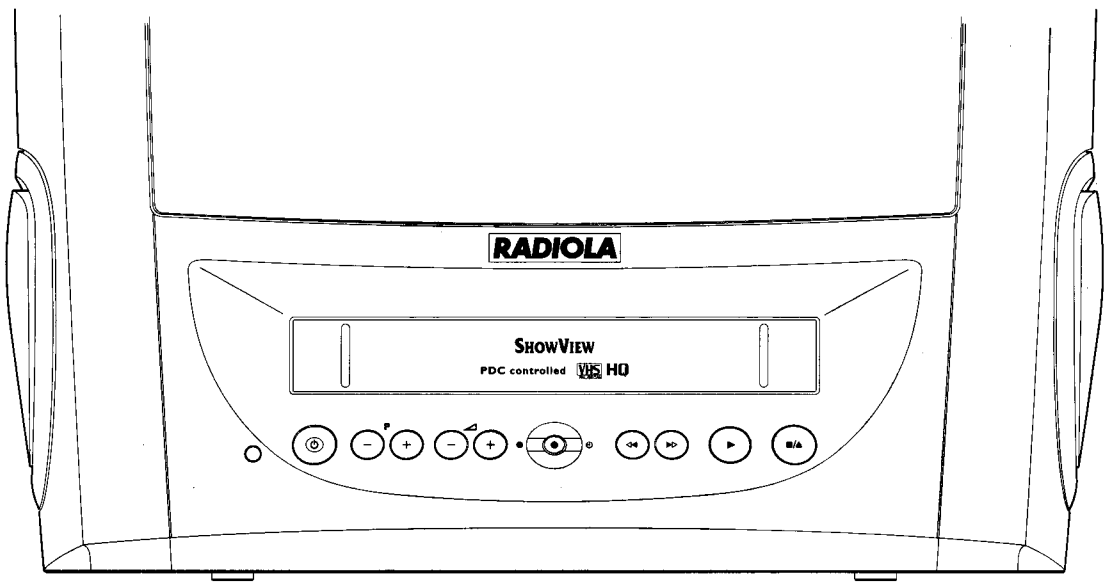

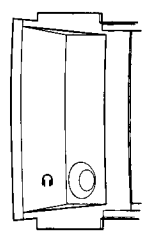

Nat. Brand 14"

1. CONNECTING YOUR TV-VIDEO COMBI

Important for the United Kingdom

This apparatus is fitted with an approved moulded 13 Amp plug. To change a fuse in this type of plug proceed as follows:

1 Remove fuse cover and fuse.

2 Fix new fuse which should be a BS1362 5A, A.S.T.A. or BSI approved type.

3 Refit the fuse cover.

If the fitted plug is not suitable for your socket outlets, it should be cut off and an appropriate plug fitted in its place.
If the mains plug contains a fuse, this should have a value of 5A. If a plug without a fuse is used, the fuse at the distribution board should not be greater than 5A.

Note: * The severed plug must be destroyed to avoid a possible shock hazard should it be inserted into a 13A socket elsewhere.

How to connect a plug:
The wires in the mains lead are coloured in accordance with the following code:
BLUE - 'NEUTRAL' ('N')
BROWN - 'LIVE' ('L')

4 The BLUE wire must be connected to the terminal which is marked with the letter 'N' or coloured BLACK.

5 The BROWN wire must be connected to the terminal which is marked with the letter 'L' or coloured RED.

6 Do not connect either wires to the earth terminal in the plug which is marked with the letter 'E' or by the safety earth symbol ⏚ or coloured green or green-and-yellow.

Before replacing the plug cover, make certain that the cord grip is clamped over the sheath of the lead - not simply over the two wires.

Connecting the cables

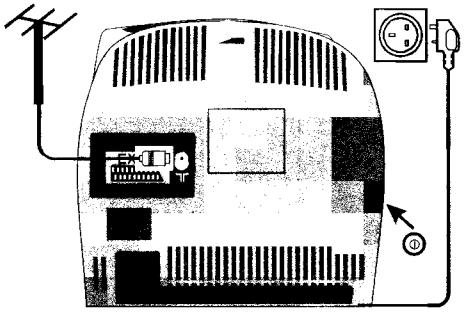

1 Insert the aerial plug into the socket.

2 Insert the plug of the mains cable into the wall socket.

3 If the little red light at the front of the set is not alight, please switch on the set. The power switch ⏻ is located on the left side panel of the set.

Connecting a decoder or other equipment

You can also connect additional equipment to the EXT.1 socket. For instance, a satellite receiver, decoder or camcorder.

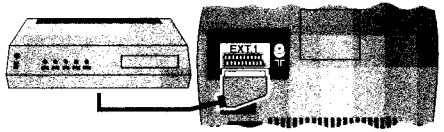

2. INSTALLING YOUR TV-VIDEO COMBI

Initial installation

1 Open up the battery compartment of your remote control and place the batteries in it as shown in the picture.

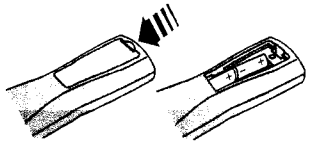

2 Close the battery compartment.

3 Confirm the picture on the TV screen with the OK button on the remote control.

4 Select the language for the on-screen display (OSD) with the ▲P+ or P−▼ button.

5 Confirm with the OK button.

6 Select the country of your residence with the ▲P+ or P−▼ button.
If this country does not show up, select 'OTHER'.

7 Confirm with the OK button.

8 If you have connected the aerial to the TV-VIDEO Combi, press the OK button.
'Automatic TV channel search' starts. This picture will appear on the screen:

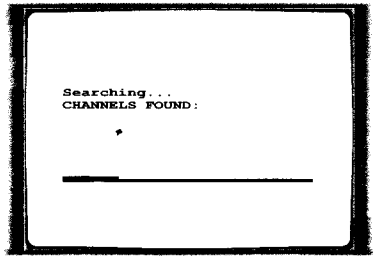

Wait until all TV channels have been found. This can take several minutes.

☐ 'Time', 'Year', 'Month', 'Date' will appear on the TV screen.

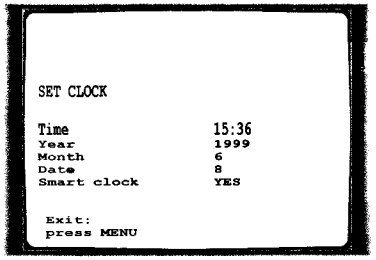

9 Check if the TIME in line 'Time' is correct. If required, change the time with the number buttons 0-9 on your remote control.

10 Confirm with the OK button.

11 Check 'Year', 'Month' and 'Date' in the same way. Confirm each line with the OK button.

12 After you have confirmed the line 'Date', the TV-VIDEO Combi will switch to standby.
The initial installation is now complete.

Note: If you have connected a decoder, you must install it as described in the next section.

Note: If you have connected a satellite receiver, please read the section 'satellite receiver'.

Automatic clock and date setting (SMART CLOCK)

Note: If a TV programme, which transmits TELETEXT, is stored with programme number 'P01', time and date will be set automatically.

1 Select the line 'Smart clock' with the menu buttons ▲P+ or P−▼.

2 Switch the function on with the menu buttons ◀◿− or +◿▶.

Note: Clock and date will automatically be adjusted to winter time and summer time.

Allocating a decoder

Some TV stations will send coded TV channels, that you can only watch when you use a decoder. You can connect such a decoder (descrambler) to your TV-VIDEO Combi. With the following function, the connected decoder will automatically be activated for the TV programme you want to watch.

1. Choose the TV channel on which you wish to use the decoder with the [+◢▶] or [◀◢−] buttons on the TV-VIDEO Combi or the number buttons [0-9] on the remote control.
2. Press the [MENU] button on the remote control. The main menu will appear.
3. Select the line '**Installation**' with the [▲P+] or [P−▼] buton and confirm with the [+◢▶] button.
4. Select the line '**Manual store**' with the [▲P+] or [P−▼] button and confirm with the [+◢▶] button.
5. Select the line '**Decoder**' with the [▲P+] or [P−▼] button.

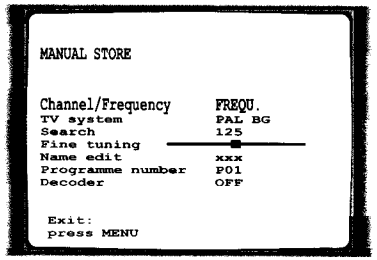

6. Select function '**ON**' with the [◀◢−] or [+◢▶] button. When you select '**OFF**', the function will be switched off.
7. Confirm with the [OK] button.
8. To end, press the [MENU] button.
   Your decoder has now been allocated to this TV channel.

Manual TV channel search

In certain cases the 'Automatic TV channel search' may not be able to find all of the TV channels (e.g. coded TV channels). In that case, use this manual method to set the channels.

1. Press the [MENU] button on the remote control. The main menu will appear.
2. Select the line '**Installation**' with the [▲P+] or [P−▼] button and confirm with the [+◢▶] button.
3. Select the line '**Manual store**' with the [▲P+] or [P−▼] button and confirm with the [+◢▶] button.

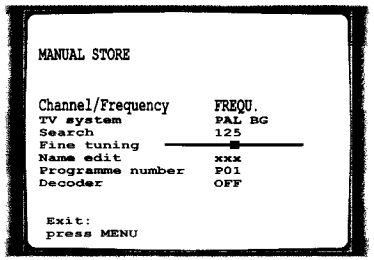

4. In the line '**Channel/Frequency**', select the display for:
   '**FREQU.**': frequency
   '**CH**': channel
   '**C CH**': special channel
5. If you know the frequency or channel of the desired TV channel, you can enter the data in line '**Search**' with the digit buttons [0-9].
   ▷ If you don't know the frequency or channel of the TV channel of your choice, press the [+◢▶] button to start the channel search.
6. In the line '**Programme number**' select the programme number you want e.g.: '**P01**', using the [◀◢−] or [+◢▶] button.
7. If you want to change the TV channel name, press the [+◢▶] button in line '**Name edit**'.
   ☐ Select the character you want to change with the [◀◢−] or the [+◢▶] button. Change the character with the [▲P+] or the [P−▼] button. Select the next character in the same way.
   ☐ Keep pressing the [+◢▶] button until the cursor disappears.
8. If you want to change the automatic tv channel setting, select the line '**Fine tuning**'.
   With the [◀◢−] or [+◢▶] button you can vary the automatic tv channel setting. **Important:** This re-tuning is only necessary and useful in **special cases**, e.g.: when there are stripes on the picture with cable-TV systems.
9. Press the [OK] button to store the TV channel.
   ▷ If you want to search for further TV channels, start again at step [5].
10. To end, press the [MENU] button.

Manual radio channel search

1. Press the [MENU] button. The main menu appears.
2. Select the line '**Installation**' with the [▲P+] or [P−▼] button and confirm with the [+◢▶] button.
3. Select the line '**Radio store**' with the [▲P+] or [P−▼] button and confirm with the [+◢▶] button.

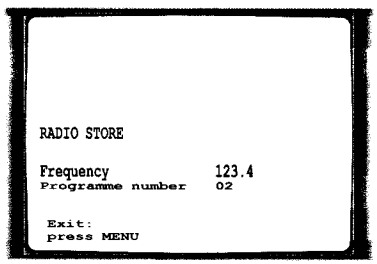

4. If you know the frequency of the desired radio channel, you can enter the data in line '**Frequency**' with the digit buttons [0-9].
   ▷ If you don't know the frequency of the radio channel of your choice, press the [+◢▶] button to start the channel search.
5. In the line '**Programme number**' select the programme number you want e.g.: '**02**', using the [◀◢−] or [+◢▶] button.
6. Press the [OK] button to store the radio channel.
   ▷ If you want to search for further radio channels, start again at step [4].
7. To end, press the [MENU] button.

Satellite receiver

You can receive channels from the satellite receiver via the scart socket [EXT.1].
To do this, select the channel number '**E1**' with the [P+/−▲▼] button. You will have to select the channels to be received by the satellite receiver on the receiver itself.

Automatic TV channel search

Your TV-VIDEO Combi will search for all TV channels.
If you want to start the automatic TV channel search again, then follow the instructions below.

1. Press the [MENU] button on the remote control. The main menu will appear.
2. Select the line '**Installation**' with the [▲P+] or [P−▼] button and confirm with the [+◢▶] button.
3. Select the line '**Autostore**' with the [▲P+] or [P−▼] button.
4. Press the [+◢▶] button. The 'Automatic TV channel search' starts.

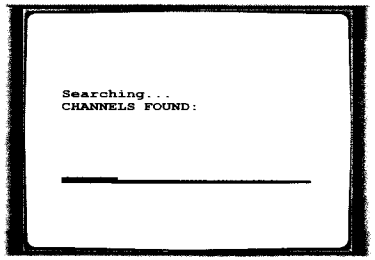

5. When the TV channel search is complete, '**Autostore ready**' will appear on the screen.

How to search for a TV channel manually, you can read in the section 'Manual TV channel search'.

▷ Automatic Channel Installation:
Some cable companies or broadcasters offer the possibility to install TV channels automatically with 'ACI'.
Information about the installation offered and how to select it, will appear on the screen.
This set will recognize and install TV channels with 'ACI' automatically.
TV channels will be stored from programme number 1 onward.
If 'ACI' cannot identify a TV channel, you can search for it using the method as described in the section 'Manual TV Channel Search'.

▷ Automatic Channel Installation ATS (automatic tuning system):
TV channels will be stored from programme number 1 onward.

Channel Number Allocation

1 Press the MENU button. The main menu appears.

2 Select the line '**Installation**' with the menu buttons ▲P+ or P−▼ and confirm with the menu button +◢▶.

3 Select the line '**Sort channels**' with the menu buttons ▲P+ or P−▼ and confirm with the menu button +◢▶.

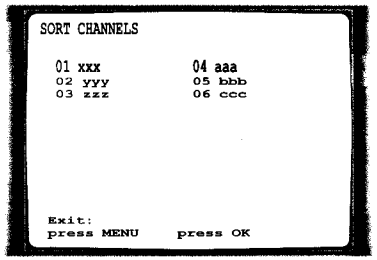

4 With the menu buttons ▲P+, P−▼, ◀◿−, or +◿▶, select the TV channel to which you want to allocate a programme number and press the OK button.

5 With the menu buttons ▲P+, P−▼, ◀◿−, or +◿▶, shift the TV channel to the programme number you wish to allocate to this TV channel and press the OK button.

6 Repeat steps 4 to 5 until you have allocated a programme number to all the required TV channels.

Delete a TV Channel

1 Press the MENU button. The main menu appears.

2 Select the line '**Installation**' with the menu buttons ▲P+ or P−▼ and confirm with the menu button +◢▶.

3 Select the line '**Sort channels**' with the menu buttons ▲P+ or P−▼ and confirm with the menu button +◢▶.

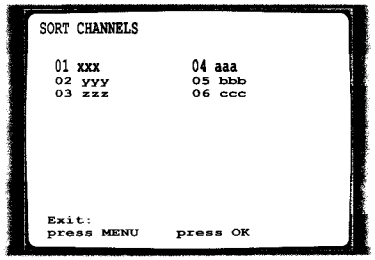

4 With the menu buttons ▲P+, P−▼, ◀◿−, or +◿▶, select the TV channel you want to delete and press the OK button.

5 Repeat step 4, until you have deleted all the required TV channels.

Setting the language

You can select the language for the on-screen display (OSD).

1 Press the MENU button on the remote control. The main menu will appear.

2 Select the line '**Installation**' with the ▲P+ or P−▼ button and confirm with the +◢▶ button.

3 Select the line '**LANGUAGE**' and confirm with the +◢▶ button.

4 Select your language with the ▲P+ or P−▼ button and confirm with the OK button.

5 To end, press the MENU button.

Setting the country

To call up the specific settings for your country, you must install the country.

1 Press the MENU button on the remote control. The main menu will appear.

2 Select the line '**COUNTRY**' and confirm with the OK button.

3 Select the country you are in with the ▲P+ or P−▼ button. If your country doesn't show up, select '**OTHER**'.

4 Confirm with the OK button.

5 To end, press the MENU button.

Setting the time and date

1 Press the MENU button on the remote control. The main menu will appear.

2 Select the line '**Set clock**' with the ▲P+ or P−▼ button and confirm with the +◢▶ button.

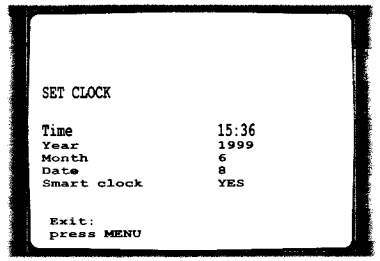

3 Check the time in line '**Time**'. If required, please change the time with the 0-9 buttons on the remote control.

4 Check '**Year**', '**Month**' and '**Date**' in the same way. You can switch between entry fields with ▲P+ or P−▼ button. Confirm each entry with the OK button.

5 To end, press the MENU button.

3. IMPORTANT NOTES FOR OPERATION

SUMMARY OF USER GUIDE

The OSD menu offers the following functions. More details on each can be found in the appropriate chapter.

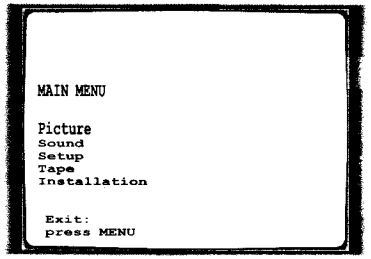

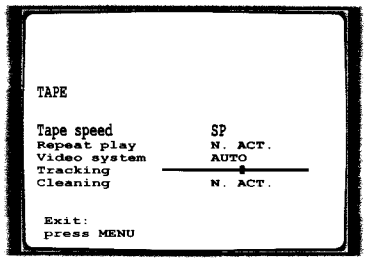

Chapter: 'PLAYBACK FUNCTIONS'

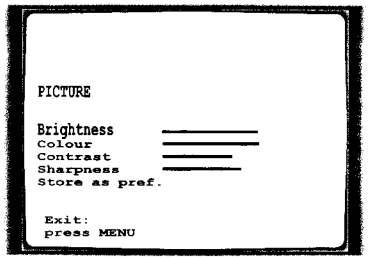

Chapter: 'TV SET FUNCTIONS'

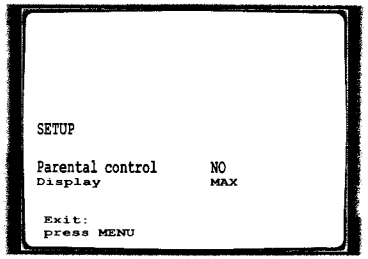

Chapter: 'ADDITIONAL FUNCTIONS'

User guide (OSD)

The OSD (On-screen display) shows the various functions in the form of a menu on the television screen. You can then choose the settings you require. There is a summary of the menus on this page. The main button functions are displayed in a help line along the bottom of the screen.

- ☐ **To call up the menu:** With the [MENU] button.
- ☐ **To select a line:** With the [◄◿−] or [+◿►] button.
- ☐ **To enter or change your selection:** With the [0-9], [◄◿−] or [+◿►] button.
- ☐ **To cancel:** With the [MENU] button.
- ☐ **To save or confirm:** With the [OK] button.
- ☐ **To close the menu:** With the [MENU] menu button.

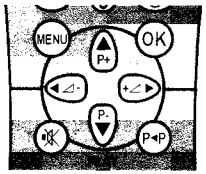

- ☐ You can switch on with the [STOP■] button, the [0-9] buttons or by putting in a cassette.

4. TV SET FUNCTIONS

Selecting a TV programme

Select the required TV channel (=programme number) with the [P+/−▲▼] button or with the digit buttons [0-9] on the remote control.

▷ If you don't know the programme number of the required TV channel:

1. Press the [P+/−▲▼] button for more than 2 seconds. The TV channel list appears on the screen.
2. Select the required TV channel with the [P+/−▲▼] button.
   After 1 second the TV-VIDEO Combi will switch to the selected programme number.

Picture settings

1. Press the [MENU] button. The main menu appears.
2. Select the line '**Picture**' with the menu buttons [▲P+] or [P−▼] and confirm with the menu button [+◿►].

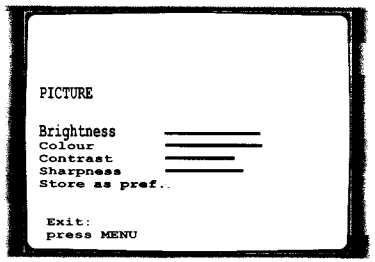

3. Select the required line with the menu buttons [▲P+] or [P−▼] and alter with the menu buttons [◄◿−] or [+◿►].

▷ To store this setting as a standard setting, select the line '**Personal**' with the menu buttons [▲P+] or [P−▼] and confirm with the [OK] button.

Volume control

You can control the volume level with the [◿+/−◄►] button. If you want to mute the sound temporarily (e.g.: during a telephone call), press the [🔇] button on the remote control. When you press the [🔇] button again, the sound will return at its original volume level.

Sound settings

1. Press the [MENU] button. The main menu appears.
2. Select the line '**Sound**' with the [▲P+] or [P−▼] button and confirm with the [+◿►] button.

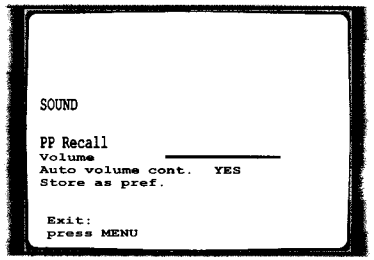

3. Select the required line with the [▲P+] or [P−▼] button and alter with the [◄◿−] or [+◿►] button.

▷ To store this setting as a standard setting, select the line '**Personal**' with the [▲P+] or [P−▼] button and confirm with the [OK] button.

▷ To call up the standard settings, select the line '**PP Recall**' with the [▲P+] or [P−▼] button and confirm with the [+◿►] button.

Automatic volume control (AUTO VOLUME CONTROL)

- ☐ Switch on '**Auto volume cont.**', to activate the automatic volume control. It minimises sudden changes in TV volume when commercial spots are transmitted.

5. RADIO FUNKTIONS

Switch on the radio with the [RADIO ON] button.

Selecting a radio channel

Select the required radio channel with the [P+/−▲▼] button or with the digit buttons [0-9] on the remote control.

Searching a radio channel

You can search for a radio channels that have not been stored, while you are listening to the radio.

[1] Press the [RADIO SEARCH] button.

▷ The TV-VIDEO Combi will search for the next radio channel.

[2] Repeat step [1] to search for the next radio channel.

Showing the frequency

☐ Press the [OK] button while you are listening to the radio. You will see the frequency of the radio channel you are listening to on the display.

6. PLAYBACK FUNCTIONS

Playing a cassette

[1] Put a cassette into the cassette slot.

[2] Press the [PLAY►] button.

[3] To stop, press the [STOP■] button.

[4] To eject the cassette, press the [■] button.

▷ Some hired cassettes may have a poor picture or poor sound quality. This is not a fault in your machine. Please read 'Eliminating picture interference'.

▷ Some functions switch off automatically after a while (for example, pause, still picture, picture search). This helps to protect the cassette and avoids wasting power.

Playing NTSC cassettes

With this set you can play cassettes that have been recorded on another video recorder in the NTSC standard (for example, American cassettes).

▷ Some special features (for example, still picture) are not possible while you are playing an NTSC cassette.

Tape position indication

▷ Press the [OK] button to display the current tape position.

▷ To change the type of tape position display, proceed as follows:

[1] During playback, press the [MENU] button.

[2] Select the line '**Tape**' with the menu buttons [▲P+] or [P−▼] and confirm with the [OK] button.

[3] Select the line '**Tape counter**' with the menu buttons [▲P+] or [P−▼].

[4] With the menu buttons [◄◿−] or [+◿►] select '**Time used**' to check the time used, or '**Time left**' to check the time left on the tape.

[5] Confirm with the [OK] button.

Searching for tape position with the picture (picture search)

[1] While a cassette is playing, press the [◁◁] (reverse) or [▷▷] (forward) button once or several times.

[2] To stop at a certain picture, press the [PLAY►] button.

▷ During picture search, the picture quality may not be so good and there will be no sound.

Still picture

[1] Press the [STILL▷▮◁] button. A still picture will appear on the screen.

[2] Each time you press [STILL▷▮◁] again, the picture will move on one step.

Searching for tape position without the picture (wind and rewind)

[1] Stop the tape with the [STOP■] button.

[2] Press the [◁◁] (reverse) or [▷▷] (forward) button.

[3] To stop at a certain picture, press the [STOP■] button.

Instant View

With this function you can switch to picture search during wind and rewind.

[1] If you hold the [◁◁] (rewind) or [▷▷] (wind) button during wind or rewind, you will switch to picture search.

[2] When you release the button, the TV-VIDEO Combi will automatically switch back to rewind or wind.

Automatic search for a tape position (index search)

At the start of each recording, the TV-VIDEO Combi will write an index code on the tape.

[1] Press the [INDEX▷▮] button. Press the [▷▷] button to select the next code mark or the [◁◁] button for the previous code mark.

[2] When the TV-VIDEO Combi finds the code mark, it will automatically switch to play.

Picture interference

When the picture quality is poor when you play a cassette, please follow these instructions.

Tracking during playback

1. During playback, press the MENU button.
2. Select the line 'Tape' with the menu buttons ▲P+ or P−▼ and confirm with the +◢▶ button.
3. Select the line 'Tracking' with the menu buttons ▲P+ or P−▼.
4. Hold the menu buttons ◀◢− or +◢▶ until the playback quality is at its best.
5. Confirm with the OK button.
6. To end, press the MENU button. This setting will remain until you remove the cassette.

Tracking during still picture

If the still picture vibrates vertically, you can improve the still picture as follows:

1. During still picture, press the MENU button.
2. Select the line 'Tape' with the ▲P+ button or P−▼ and confirm with the +◢▶ button.
3. Select the line 'Jitter' with the ▲P+ or P−▼ button.
4. Hold the ◀◢− or +◢▶ button until the picture quality is at its best.
5. Confirm with the OK button.
6. To end, press the MENU button.

   Please note, however, that interference may still occur with poor quality cassettes.

Cleaning the video heads

If horizontal lines appear on the screen when you play a cassette, you should clean the video heads.

1. During playback, press the MENU button.
2. Select the line 'Tape' with the menu buttons ▲P+ or P−▼ and confirm with the +◢▶ button.
3. Select the line 'Cleaning' with the menu buttons ▲P+ or P−▼.
4. Press the OK button. 'CLEANING' appears on the screen.
5. Wait a few seconds, until the message disappears and then press the MENU button.

7. MANUAL RECORDING

Use 'Manual Recording' to make a spontaneous recording (for example, a programme currently being shown).

- ☐ If you want to start and stop a recording manually, read the section: 'Recording without automatic switch-off'.
- ☐ If you want to start a recording manually but have it stopped automatically, read the section: 'Recording with automatic switch-off'.
- ☐ If you want a recording to be controlled automatically by a satellite receiver, read the section entitled 'Automatic recording from a satellite receiver'.

Recording without automatic switch-off

1. Insert a cassette.
2. Use the P+/−▲▼ button to select the programme number you want to record, for example, 'P01'.

   Programme number 'E1' is provided for recording from external sources (via the EXT.1 scart socket).
3. To start recording, press the RECORD/OTR● button on the remote control or ◉ on the TV-VIDEO Combi.
4. Stop recording with the STOP■ button.

   During a recording you can only watch the current programme.

   To switch off the screen, press the STANDBY⏻ button.

Recording with automatic switch-off (OTR one-touch-recording)

1. Put a cassette in the machine.
2. Use the P+/−▲▼ button to select the programme number you want to record.
3. Press the RECORD/OTR● button on the remote control.
4. Press the RECORD/OTR● button again and again until the display on the TV-VIDEO Combi shows the desired end time or length of the recording.

   To cancel this information, press the CLEAR button.

Protecting your recordings

So that you don't accidentally delete an important recording, remove the special tab on the narrow side of the cassette with a screwdriver or slide the special tab to the left. Later, if you no longer want to protect your recording, you can seal the gap again with sticky tape or slide the special tab to the right.

Auto-assembling

You can use the auto-assembling function to join individual recordings without any major picture disturbance between them.

1. While the cassette is playing, search for the correct position on the tape.
2. Stop the cassette by pressing the STOP■ button. 'Pause' will appear on the TV screen.
3. Now start recording as usual by pressing the RECORD/OTR● button on the remote control.

Selecting the recording speed (SP or LP)

You can reduce the recording speed by half. This makes it possible to record, for example, eight-hours instead of four-hours on an 'E240' (four-hour) cassette.

1. Press the MENU button. The main menu appears.
2. Select the line 'Tape' with the ▲P+ or P−▼ button, and confirm with the +◢▶ button.
3. Select the line 'Tape speed' with the ▲P+ or P−▼ button, and confirm with the +◢▶ button.
4. Select the required recording speed with the ◀◢− or +◢▶ button.

   'LP': Long Play = half recording speed (double recording time).
   'SP': Standard Play = normal recording speed.

   The picture quality will be adversely affected when recording at half recording speed ('LP').

   For playback, the correct recording speed will automatically be selected.
5. Confirm with the OK button.
6. To end, press the MENU button.

8. PROGRAMMED RECORDING (TIMER)

Use programmed recording to automatically start and stop a recording at a later date.

To make a programmed recording, your TV-VIDEO Combi needs to know:

* the date you want to make the recording;
* the programme number for the TV channel you want to record;
* the start and stop time of the recording;
* whether you want to use VPS or PDC;
* the recording speed (SP/LP).

The TV-VIDEO Combi stores all the information in a TIMER block. You can programme up to 6 TIMER blocks a month in advance.

'VPS' (Video Programming System) and 'PDC' (Programme Delivery Control)

With 'VPS and PDC', the TV station controls the start time and the length of the recording. This means that the TV-VIDEO Combi switches itself on and off at the **right time** even if a TV programme you want to record begins earlier or finishes later than expected.
Usually the start time is the **same** as the VPS or PDC time. But if your TV guide gives a VPS or PDC time which is different to the programme's start time (for example, 20.15 and VPS 20.14), you must enter '20.14' as the start time.
If you want to programme a time that is different from the VPS or PDC time, you must switch off VPS or PDC.

Programming a recording (with 'VIDEOplus')

All the information required for a programming is contained in the PlusCode-programming number.

VIDEO Plus+

1 Press the TIMER button on the remote control.

2 Select the line '`Videoplus`' with the menu buttons ▲P+ or P−▼ and confirm with the +◢▶ button.

3 Enter the entire PlusCode-programming number (up to 9 digits) printed in your TV guide next to the start time of a TV programme.
For example, 5-234-89 or 5 234 89
Enter 523489 for the PlusCode-programming number.
If you make a mistake, you can clear your instructions with the CLEAR button.

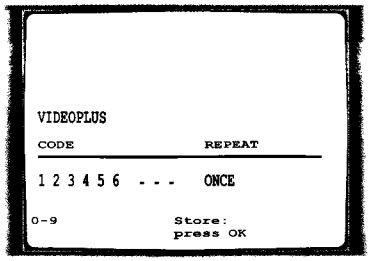

4 In line '`Tape`' select daily or weekly programming with the ◀◢− or +◢▶ button.
'`Mo-Fr`': recordings every day from Monday to Friday.
'`Mo-Su`': recordings every day from Monday to Sunday.
'`WEEKL.`': recordings every week on the same day of the week.

5 Confirm with the OK button. Your programming details will then appear on the TV screen.

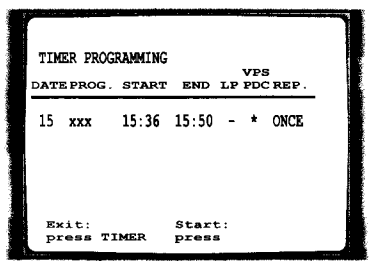

If VIDEOPlus+ does not recognise the TV channel, '`E1`' will appear on the TV screen. Instead of '`E1`', you can select the programme number you want with the number buttons 0-9 and confirm with the OK button.

If '`Code error`' appears on the TV screen, this means you entered an incorrect PlusCode number or the incorrect date. Correct your instructions or end with the SV/V+ button.

If '`Daily error`' appears on the TV screen, the date was incorrectly entered. Daily programming can only be used for recordings to be made from Monday to Friday.

Under '`VPS/PDC`', use the ▲P+ or P−▼ button to switch 'VPS or PDC' on or off.

Under '`LP`', use the ▲P+ or P−▼ button to select the recording speed 'SP' or 'LP'.

If the message '`Press STOP to start recording`' appears on the TV screen, press the STOP■ button.
A TIMER recording will only function, if the set is not used for other TV-VIDEO Combi functions (e.g. playback).

The TIMER lamp on the front of the set lights up when one or more of the TIMER blocks are occupied.

If the end of the cassette is reached during a recording, the TV-VIDEO Combi automatically ejects the cassette.

If you forget to load a cassette, '`Timer collision - no cassette`' will appear.

If you inserted a cassette with erase protection when you want to start a recording, the cassette will be ejected.

Programming a recording (without 'VIDEOPlus')

1 Press the SV/V+ button on the remote control.

2 Select the line '`Timer programmed`' with the menu buttons ▲P+ or P−▼ and confirm with the +◢▶ button.

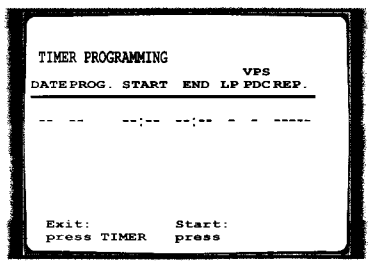

3 Select a free TIMER block with the P+/−▲▼ button. Press the OK button.

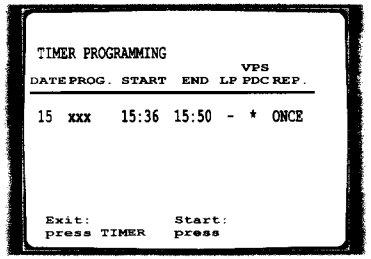

4 Select the entry field with the ◀◢− or +◢▶ button.

5 Enter information with the menu buttons ▲P+ or P−▼ or with the digit buttons 0-9.

Under '`REP.`', use the ▲P+ or P−▼ button to select daily or weekly programming.
'`Mo-Fr`': recordings every day from Monday to Friday.
'`Mo-Su`': recordings every day from Monday to Sunday.
'`WEEKL.`': recordings every week on the same day of the week.

Under '`VPS/PDC`', use the ▲P+ or P−▼ button to switch 'VPS or PDC' on or off.

Under '`LP`', use the ▲P+ or P−▼ button to select the recording speed 'SP' or 'LP'.

6 Confirm with the OK button when the information is correct.

The programming information has been stored in a TIMER block.

7 To end, press the TIMER button.

8 Make sure that the cassette you have put in can be recorded on.

How to check or change a TIMER

1. Press the [TIMER] button on the remote control.
2. Select the line '`Timer programmed`' with the menu buttons [▲P+] or [P−▼] and confirm with the [+◿▶] button.
3. Select the TIMER you want to check or change with the [▲P+] or [P−▼] button and confirm with the [OK] button.
4. Select the entry field with the [◀◿−] or [+◿▶] button.
5. Change any information with the [▲P+] or [P−▼] button or with the [0-9] buttons.
   ▷ Under '`LP`', use the [▲P+] or [P−▼] button to select the recording speed 'SP' or 'LP'.
6. Confirm with the [OK] button.
7. To end, press the [TIMER] button.
8. Make sure that the cassette you have put in can be recorded on.

How to clear a TIMER

1. Press the [TIMER] button on the remote control.
2. Select the line '`Timer list`' with the menu buttons [▲P+] or [P−▼] and confirm with the [+◿▶] button.
3. Select the TIMER you want to clear with the menu buttons [▲P+] or [P−▼].
4. Press the [CLEAR] button.
5. Confirm with the [OK] button.
6. Switch off with the [TIMER] button.

9. ADDITIONAL FUNCTIONS

How to read TELETEXT

- ☐ Press the [TELETEXT] button to switch the TXT decoder on and off. The TV-VIDEO Combi is now receiving the TXT of the TV channel currently selected.
- ☐ To store the current page, press the [OK] button. The next time you call up TELETEXT, you will automatically turn to this page.
- ☐ If you want to select an other page, type in the number of the page with the digit buttons [0-9].

Extra TELETEXT functions

To use the extra TELETEXT functions, press the [MENU] button, when you are in TELETEXT.

- ☐ To enlarge the print, select the symbol '⊕' and confirm with the [OK] button.
- ☐ To switch off the TELETEXT decoder temporarily, select the symbol '⊗' and confirm with the [OK] button.
- ☐ To call up a TELETEXT sub-page:
  1. Select the symbol '`/00`' and confirm with the [OK] button.
  2. Enter the page number of the sub-page with the [0-9]-buttons (for example: 0123).
- ☐ To call up concealed information, select the symbol '?' and confirm with the [OK] button.
- ☐ To stop the pages from being turned over, select the symbol '⊕' and confirm with the [OK] button.
- ☐ To stop the pages from being turned over, select the symbol '⊕' and confirm with the [OK] button.
- To show TELETEXT transparently, select the symbol '◪' and confirm with the [OK] button.

Changing the TV system

If you play back recordings made on a different kind of tape (for example, NTSC standard), the automatic TV system switch-over may lead to colour interferences. You can switch off the 'automatic TV system switch-over' as follows.

1. Press the [MENU] button. The main menu appears.
2. Select the line '`Tape`' with the [▲P+] or [P−▼] button and confirm with the [+◿▶] button.

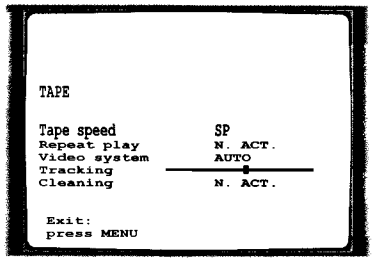

3. In the line '`System`' select the required TV system with the menu buttons [◀◿−] or [+◿▶].
4. Confirm with the [OK] button.
5. To end, press the [MENU] button.
   ▷ If colour interference still occurs, you can switch to '`BW`' (black and white) in line '`System`'.

Parental control

This function will prevent unauthorised use of your TV-VIDEO Combi. All button-functions will be locked.

▷ You can make programmed recordings while the parental control is on.

1. Press the [MENU] button. The main menu appears.
2. Select the line '`Setup`' with the [▲P+] or [P−▼] button and confirm with the [+◿▶] button.

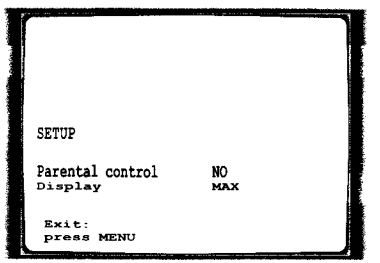

3 In the line '**Parental control**' select '**ON**' with the ◀◿− or +◿▶ button.

4 Confirm with the OK button.

5 To end, press the MENU button.
Keep the remote control in a safe place.

6 If you want to switch off the parental control, select '**OFF**' in line '**Parental control**'.

▷ If a button is pressed with activated parental control, '**σ**' will appear in the display.

Switching the On-screen display (OSD) on or off

You can switch the On Screen Display of the current operating information on or off.

1 Press the MENU button. The main menu appears.

2 Select the line '**Setup**' with the menu buttons ▲P+ or P−▼ and confirm with the +◿▶ button.

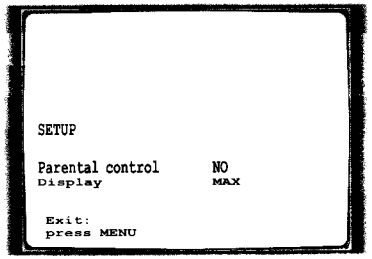

3 Select the line '**Display**' with the menu buttons ▲P+ or P−▼.

4 Select one of the options indicated with the menu buttons +◿▶ or ◀◿−.
'**MAX**': OSD appears for a few seconds each time an operating mode is selected and then disappears.
'**MIN**': OSD is minimised.
'**PROGR.**': the programme number is constantly indicated.
'**COUNTER**': the counter is constantly indicated.

5 Confirm with the OK button.

6 To end, press the MENU button.

▷ With the OK button you can superimpose the On Screen Display of current operating mode on the TV screen.

Continuous playback

You can automatically play a cassette again and again. When the end of the tape or the recording has been reached, it will rewind and start again.

1 Press the MENU button. The main menu appears.

2 Select the line '**Tape**' with the menu buttons ▲P+ or P−▼. Confirm with the menu buton +◿▶.

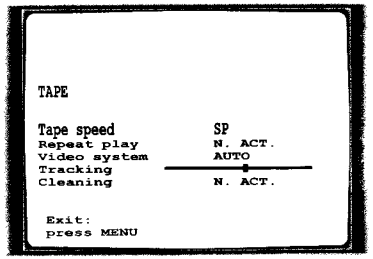

3 Select the line '**Repeat play**' with the menu buttons ▲P+ or P−▼.

4 Select '**ON**' with the menu buttons ◀◿− or +◿▶. If you select '**OFF**', the function will be switched off.

5 Confirm with the OK button.

6 Press the MENU button.

Switch off function (SLEEP TIMER)

You can programme your set to switch off after a predetermined period.

1 In the menu '**Setup**', select the line '**Sleep timer**'.

2 Determine the time left until switch off in 15 minutes intervals.
When you set the time to '0' with the CLEAR button the sleep timer is switched off.

3 Confirm with the OK button.

Switch on function (WAKE-UP TIMER)

You can programme your set to switch on at a predetermined time.

1 Press the TIMER button on the remote control.

2 Select line '**Wake-up timer**' with the ▲P+ or P−▼ button and confirm with the +◿▶ button.

3 Wählen Sie mit der Taste ▲P+ oder P−▼ die Art des Timers.
'**TV**': Wake up with TV set.
'**RADIO**': Wake up with radio.
'**BUZZER**': Wake up with beep.

4 Select the entry field with the ◀◿− or +◿▶ button.

5 Enter the information with the ▲P+ or P−▼ button or with the number buttons 0-9.

6 In the line '**ON**', switch the function on or off.

7 Press the OK button.

Signal	Description	Circuit
+5TVBS	+5V for TVB, switched	AF2
12A	+12V analog	AL VS PS HPAV AP AF
12A2	+12V analog, for front audio buffer	HPAV
14A	+14V analog	SF PS1 PS SF1
14M1	+14V for loading- and headmotor	AIO1 DE PS1 PS
17_14M1	Capstan motor supply, Hi	PS1
17_14M2	Capstan motor supply, Hi	PS
190V	Supply for RGB power amplifier	PT
33A	+33V for tuner tuning voltage	PS1 PS TU1 TU2
3V3	+3.3V supply for TXT-IC (Painter)	PS1 COTV
5A1	+5V supply for audio processing	AF2
5AD	+5V supply after stabilisation	PS1 PS
5AS	+5V analog, switched after fuse 1151	PS TU2 AP AF
5AS2	+5V analog, switched after fuse 1153	CVB VS VSEC HA PS
5DS	+5V digital, switched	AIO1 DE PS1 PS IO_1 SF1 COTV AP AF2
5SE	+5V supply for SECAM	VSEC
5STBY	+5V supply permanently	AIO1 AIO2 CVB PS1 PS IO_1 AMP COTV AF2 ACO KEY
5STBY2	+5V supply permanently after coil 5901	AIO2
5STBY3	+5V supply permanently after coil 5903	AIO2
5TVBS	+5V supply for TVB, switched	SF PS1 TU1 IO_1
5VS1	+5V supply for signal processing	VS
5VS2	+5V supply for signal processing	VS
5VSTBY	+5V permanent	AIO1
7NEG	-7V supply	SF PS1 IO_1 SF1
7NEGESD	-7V for ESD protection	IO_1
8A	+8V Analog	AP
8SC1	Scart 1 pin 8 output	IO_1 COTV
8TVB	+8V supply on TVB	PS1 TU1 TV IO_1 AF2 ACO
8TVB1	+8V supply on TVB after 5205	TV COTV
8TVB2	+8V supply on TVB after 5706	TU1
9_14M2	Capstan motor supply, switched	DE PS
9M2	Capstan motor supply, low	PS1 PS
9V	+9V aupply for radio display	PS1 PS
A0...A19	Adress lines	AIO2
ABS	Automatic black current stabilisation	PT
ABS_CRT	Automatic black current stabilisation	TV
ADCO	Centre audio out from Dolby decoder	AF2 DOSCD ACO
ADSO	Surround audio out from Dolby decoder	AF2 DOSCD ACO
AE1L	Audio out left	IO_1 AF
AE1R	Audio out right	IO_1 AF
AEH1/2	Audio erase head	
AFEL	Audio from frontend, left	AP AF
AFER	Audio from frontend, right	AP AF

GB

Signal	Description	Circuit
AFRL	Audio left from Front connector	AL VS HPAV AF
AFRR	Audio right from front connector	AL VS HPAV AF
AFV1	Audio from frontend 1	TU1 IO_1 SF1 AF2
AFV2	Audio from frontend 2	TU2 AP AF
AGC1	Automatic gain control, tuner 1	TU1 COTV
AH1/2/C	Audio heads	
AL0	Audio output left	AF2
ALO	Audio left out	IO_1 SF1 AF
AMLP	Audio mono playback	AL AF
AMLR	Audio mono record	AL AF
AMT	Audio mute	AIO1 AMP COTV
ANODE	Picture tube anode	PT
APH	Playback audio from head	AL
AQUADAG	Tube ground	LS PT
AR0	Audio output right	AF2
ARCLO	Audio rear cinch left out	AF2 DOSCD ACO
ARCRO	Audio rear cinch right out	AF2 DOSCD ACO
ARH	Audio record to head	AL
ASCLI_ASCI	Audio scart left in/audio scart in	AL IO_1 SF1 AF AF2
ASCLI2	Audio left in from scart 2	HPAV DOSCD
ASCLO	Audio output from scart 1, left	AF2
ASCRI	Audio scart right in	AF2
ASCRI_AFR	Audio scart right in/Audio front	AL IO_1 SF1 AF
ASCRI2	Audio scart left in/audio scart in	HPAV DOSCD
ASCRO	Audio output from scart 1, right	AF2
ASTB	Audio standby	AMP COTV
AUL	Audio left	SF1 AMP
AVSO	Audio view select out	SF1
AVSOL	Audio view select out left	SF
AVSOR	Audio view select out right	SF SF1
BCI	Beam current information	LS TV
BLSC	Blanking pulse RGB loopthrough	TV IO_1
BLUE	Blue signal from scart	PT TV IO_1
BLUE_CRT	Blue signal to CRT panel	TV
BTXT	Blue signal from teletext	TV COTV
CAGC	Chroma Automatic gain control	AIO1 VS
CAP	Capstan control voltage	AIO1 DE
CKDET	Colour killer detection	AIO1 VS
concrt_fg	Picture tube ground	PT
concrt_g1	Picture tube grid 1	PT
concrt_g2	Picture tube grid 2	PT
concrt_gnd	Picture tube ground	PT
concrt_h	Tube heater ground	PT
concrt_ha	Tube heater	PT

Signal	Description	Circuit
concrt_kb	Tube kathode blue	PT
concrt_kg	Tube kathode green	PT
concrt_kr	Tube kathode red	PT
CPRV	Chrominance PAL record	VS HA
CREV	Capstan reverse	AIO1 DE
CROT	Colour rotation on/off	AIO1 VS
CSCP	Colour phase switching for LP feature mode	AIO1 VS
CSI	Colour system information	AIO1 VSEC
CSP	Chrominance secam playback	VS VSEC
CSRV	Chrominance secam record	VSEC HA
CSW	8V/14V switching for capstan motor	AIO2 PS
CSYNC	Composite sync pulse	AIO1 VS VSEC
CSYNC2	Composite sync pulse	VS HA
CTL1/2	Control track signal	
D0-7	Data lines	
DEG1/2	Degaussing	PT
DISDIM	Display-Dimmer	AIO1 PS
DISSUP	Display supply	AIO1 PS KEY
DRUM	Head wheel control	AIO1 DE
EHT	High tension	LS
EHT_PROT	High tension protection	LS TV
ENVC	Envelope comparator signal	AIO1 HA
EWDR	East/West drive	LS TV
FFP	Feature frame pulse	AIO1 VS
FGD	Capstan tacho pulse digital	AIO1 DE
FMPV	FM video playback	VS VSEC HA
FMRV	FM video record	VS HA
FOCUS	Focus control signal	LS
FSC	Colour subcarrier	VS VSEC
G2 SCREEN	Grid 2 screen	LS
GND	Ground	IO_1 COTV AF2 ACO
GNDA	Ground analog	HPAV
GNDAF	Ground analog AF	AL VS AF
GNDAIN	Ground analog in	HPAV
GNDAL	Ground analog AL	AL
GNDAP	Ground analog AP	SF IO_1 AMP AF DOSCD
GNDAP2	Ground analog AP	AP AF2 ACO
GNDAU	Ground audio	PS1 AMP HPAV
GNDD	Ground digital	AIO1 AIO2 CVB DE PS KEY
GNDEO	Ground erase oscillator	AL
GNDFV2	Ground frontend 2	CVB AL PS TU2 AP
GNDHA	Ground analog HA	HA AF
GNDHOT	Primary ground	PS1
GNDIF	Ground intermediate frequency	TU1

Signal	Description	Circuit
GNDLOT	Ground Line output transformer	LS PT
GNDM	Ground capstan motor	PS1 PS
GNDM1	Ground loading- and headmotor	AIO1 DE PS
GNDM2	Ground capstan motor	DE PS
GNDSF	Ground analog SF	SF1 AMP
GNDT	Ground analog TV	TV
GNDTV	Ground analog TV	PS1 PS LS PT TV IO_1 DOSCD
GNDTV2-4	Ground analog TV	TU1 TV
GNDTXT	Ground teletext	PS1 COTV
GNDV	Ground video	HPAV
GNDVFR	Ground front video	HPAV
GNDVS	Ground signal electronics	VS VSEC AF
GREEN	Green signal from scart	PT TV IO_1
GREEN_CRT	Green signal to CRT panel	TV
GTXT	Green signal from teletext	TV COTV
HDEF1/2	Horizontal deflection	LS
HDR	Horizontal drive	LS TV
HEATER	Heater voltage	LS PT
HFB	Horizontal flyback	LS TV COTV
HP2	Head pulse audio	AIO1 AF
IBASS	Bass regulating signal	SF SF1 COTV
ICLKRESET	Reset for clock device, active low	AIO2 CVB
ILED	LED-tower supply	AIO1
INIT	Deck switch	AIO1
IRAL	Inverse Record Audio Linear	AIO1 AL
IREV	Dubbing oscillator on/off	AIO1 HA
ISTBY	Inverse stand by	AIO1 PS1 PS COTV
ISWS	Video-FM mute	AIO1 HA COTV
ITREBLE	Treble regulating signal	SF SF1 COTV
ITXTINTCO	Teletext interrupt to controller, inverted	AIO1 COTV
IWIND	Control pulse amplification low	AIO1 DE
K1/2	Key sensing	AIO1 AIO2 KEY
KBLUE	Kathode blue	PT
KGREEN	Kathode green	PT
KRED	Kathode red	PT
LEFT	Left channel from FM radio	SF
LH1/2/C	Long play heads	
LL	Line in left	AMP HPAV
LR	Line in right	AMP HPAV
LRD	Rote LED	AIO1 KEY
LSPL	Loudspeaker left	SF IO_1 AMP AF2
LSPR	Loudspeaker right	SF IO_1 AMP AF2
MAINSOFF	Antiplop at mains off	PS1 AMP
MEH1/2	Main erase head	AL

Signal	Description	Circuit																												
MNT1	**Sound filter switch**														TU1						COTV									
MTA	Audio mute	AIO1					AL																							
MUTE	**Audio mute**																								AF2		ACO			
MUTE_PST	Mute/pseudo stereo			SF														IO_1			COTV									
OS	**Ausganswahl**		AIO2					VS																						
PBV	Playback Video	AIO1							VSEC																					
PG_FG	**Head wheel position/-speed**	AIO1				DE																								
PSS1	PAL/SECAM switch, tuner 1														TU1						COTV									
RAB	**Radio buzzer**			SF															SF1		COTV									
RAD	Radio			SF															SF1		COTV									
RCLK_MNT2	**FM radio clock/sound filter switch**	AIO1	AIO2													TU2														
RDATA_PSS2	FM radio data/PAL-SECAM switch, tuner 2	AIO1	AIO2													TU2														
RECP	**Record protection**	AIO1																												
RED	Red signal from scart													PT			TV	IO_1												
RED_CRT	**Red signal to CRT panel**																TV													
REMOTE	Signal from remote control receiver	AIO1																												
RGBON	**RGB input selection**																TV				COTV									
RIGHT	Right channel from FM radio			SF																										
RL	**Record LED control**	AIO1																												KEY
RMA	Record mute audio	AIO1																							AF					
RMS_AFC2	**Radio stereo indication/AFC tuner 2**	AIO1														TU2														
RTXT	Red signal from teletext																TV				COTV									
RWE_SB1_2	**Radio Write Enable/SECAM band 1/2**	AIO1														TU2														
RXD	Receive Data	AIO1																												
SB1_1	**Secam band 1, tuner 1**														TU1						COTV									
SCL0	IIC bus 0 clock	AIO1			CVB										TU1	TU2	TV	IO_1			COTV		AP	AF	AF2					
SCL1	**IIC bus 1 clock**	AIO1																			COTV									
SCL2	IIC bus 2 clock	AIO1						VS																						
SCO1/2	**Scart output selection**																	IO_1			COTV									
SDA0	IIC bus 0 data	AIO1			CVB										TU1	TU2	TV	IO_1			COTV		AP	AF	AF2					
SDA1	**IIC bus 1 data**	AIO1																			COTV									
SDA2	IIC bus 2 data	AIO1						VS																						
SH1/2/C	**Standard play heads**																													
SIF1	Sound intermediate frequency, tuner 1														TU1			IO_1							AF2					
SIF2	**Sound intermediate frequency, tuner 2**															TU2							AP							
SRCLK	Shift register clock	AIO1																												KEY
SRDAT1	**Shift register data 1**	AIO1																												**KEY**
STROBE	Strobe pulse for shiftregister	AIO1																												KEY
SWIN	**Head switching pulse**	AIO1								HA																				
SYNC	Control track pulse	AIO1				DE																								
TAE	**Tape end detection**	AIO1																												
TAS	Tape start detection	AIO1																												
THIO	**Loading motor in/out**	AIO1				DE																								
TL	Timer LED control	AIO1																												KEY

Signal	Description	Circuit
TMO	Loading motor on/off	AIO1, DE
TRIA_ALM	Tracking information audio / Audio level indication	AIO1, AF
TRIV	Tracking information video	AIO1, HA
TU1_2_ARO	Tuner 1/2 audio right out	IO_1, AF
TU1A_B	Tuner 1 audio select	TU1, COTV
TWB	Buzzer control	AIO1, CVB
TXD	Transmit Data	AIO1
TXT_RESET	Reset for TXT-IC (Painter)	AIO1, AIO2
TXTRESET	Reset for TXT-IC (Painter)	COTV
UAU	Supply for sound power amplifier	PS1, AMP
UBAT	Supply for high tension	PS1, LS
VCC	Supply for FM radio	SF
VDEFH	Deflection voltage high	LS
VDEFL	Deflection voltage low	LS
VDRN	Vertical drive negative	LS, TV
VDRP	Vertical Drive positive	LS, TV
VFC	Video from front connector	VS, HPAV
VFV1	Video from frontend 1	TU1, TV, IO_1
VFV1_2	Video from frontend 1/2	VS, TU2, IO_1, AF
VFV1_2_o	Video from frontend 1/2 to TVB	AF
VGUARD	Vertical protection	LS, TV, COTV
VISS	Control sync pulse inversion	AIO1, DE
VOL	volume control	AMP, COTV
VPDC	Video for VPS/PDC circuit	CVB, VS, IO_1, COTV, AF
VPDC_o	Video for VPS/PDC circuit	AF
VREC	Video record from I/O	VS, VSEC
VRGB	Supply for RGB power amplifier	LS, PT
VRUB	Video from signal electronics	VS, TV, IO_1, AF
VS1/2	View Select 1/2	SF1, COTV
VSCI2	Video input scart 2	HPAV, DOSCD
VSCIN	Video input scart 1	VS, TV, IO_1, AF
VTV	Video to TXT-IC (Painter)	TV, COTV
W_R	Control track write/read	AIO1, DE
WES	Write enable for FLASH ROM	AIO1, AIO2
WTL	Wind tacho left	DE
WTLD	Wind tacho left digital	AIO1, DE
WTR	Wind tacho right	DE
WTRD	Wind tacho right digital	AIO1, DE

II. ADJUSTMENT PROCEDURES
A. SERVICE AND CAUTION NOTES

Caution:
Ensure that the plug is removed from the mains before carrying out any installation or removal work.

To prevent damage to the electronics, plug connectors inside the device must only be connected or unplugged when the device is at zero current.
The cables 8025, 8026, 8027 and 8028 are welded and CANNOT therefore be removed.
When inserting the TVCR unit, attach the lift flap correctly onto the "Lift flap opener".

The following points should be taken into account during maintenance work:

A. Maintenance of the VCR and TV parts

A.1 Service position for the recorder part

The service position is used for checking and replacing mechanical or electrical elements. If the unit is in this position, the mechanical parts can be checked for mobility and defective parts can be replaced. To bring the VCR unit into the service position as given in Fig. 1-1, proceed as follows:

1. Remove the rear panel after unfastening the 6 / 10 screws (55) (see Fig. D2 on page 2-18).

2. Remove the 4 screws (51)
   Remove the cinch printed board from the groove and take cable 8026 out of the cable guide (see Fig. D3 on page 2-18).
   Press down the 2 snap-on hooks (H1) and push the TVCR unit back by about 5cm.
   Unlock the mains switch with mount by pressing on the hook (H2) and take it out of the groove (not for 14" units) (see Fig. D4 on page 2-18). Remove the mains cable from the cable guide.

WARNING: To ensure that no contact is made with the mains supply (110-240V), the mains plug must always remain fitted in its mount.

3. Remove the 4 screws (51'). Detach the high tension cable (EHT) from the mount.
   Remove plug 1982/1983 to the front panel. (see Fig. D4 on page 2-18)
   Remove plug 1933.
   Take out all the cables from the cable guides (K).

4. Lift up the TV board (TVB) slightly and carefully move the unit's VCR motherboard backwards out of the unit.
   Disconnect the TV board in the groove.

5. To remove the unit's drive motherboard from the groove, unfasten the 6 screws (S1). First push back the lift by 5cm after releasing both lift locks (fig.1-13). Take out the erase head cable and the A/C head FFC cable to the motherboard from the guides in the groove (see Fig. D5 on page 2-18).
   Turn over the unit, unhook the 5 snap hooks (S) and lift the groove upwards (see Fig. D6 on page 2-18).

6. To remove the tape deck, unfasten the earthing screw (M). Disconnect all connection cables from the drive to the motherboard.
   Lift the drive backwards slightly to unfasten the plug connection to the capstan motor.
   Use pointed pliers to press together the 2 snap-on hooks (H4) and lift up the drive (see Fig. D7 on page 2-18).
   The drive can now be separated from the motherboard.
   The unit can now be operated without tape deck in "Dummy mode" (see Chapter 2 Service Test Program).

Caution:
The drive must always be kept in a horizontal position.
During assembly, the FFC cable from the A/C head to the motherboard must be laid as given in Fig. D5 (on page 2-18).
Original cable marked "O" for audio / CTL head (Fig. 1-3).

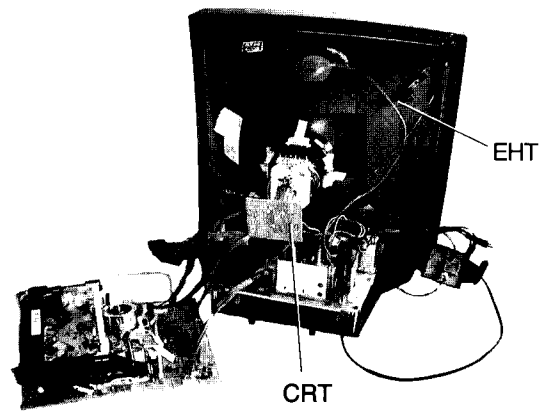

Fig. 1-1

A.2 Service Position for the TV Board (TVB)

To bring the TV board into the service position, proceed as follows:

1. Remove the rear panel after unfastening the 6 / 10 screws (55) (see Fig. D2 on page 2-18).

2. Remove the 4 screws (51)
   Remove the cinch printed board from the groove and take cable 8026 out of the cable guide (see Fig. D3 on page 2-18).
   Press down the 2 snap-on hooks (H1) and push the TVCR unit back by about 5cm.
   Unlock the mains switch with mount by pressing on the hook (H2) and take it out of the groove (not for 14" units) (see Fig. D4 on page 2-18). Remove the mains cable from the cable guide.

WARNING: To ensure that no contact is made with the mains supply (110-240V), the mains plug must always remain fitted in its mount.

3. Remove the 4 screws (51'). Detach the high tension cable (EHT) from the mount.

Remove plug 1982/1983 to the front panel.
(see Fig. D4 on page 2-2)
Remove plug 1933.
Take out all the cables from the cable guides (K).

4. Lift up the TV board (TVB) slightly and carefully move the unit's VCR motherboard backwards out of the unit. Disconnect the TV board in the groove.

5. Remove plug 1950.
Remove the 5 screws (S2) (see Fig. D8 on page 2-18).
Move the TV board (TVB) backwards slightly and lift off upwards from the plate frame.
Remove the plate frame and reconnect plug 1950 (Fig. 1-2).

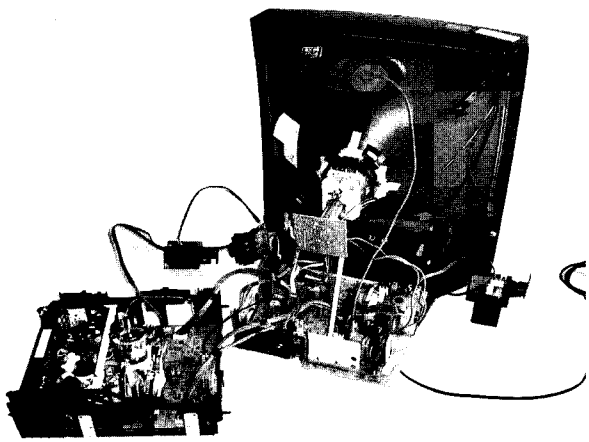

Fig. 1-2

A.3 Removing the keypad printed board

1. Remove the rear panel after unfastening the 6 / 10 screws (55) (see Fig. D2 on page 2-18).

2. Remove the 4 screws (51)
Remove the cinch printed board from the groove and take cable 8026 out of the cable guide (see Fig. D3 on page 2-18).
Press down the 2 snap-on hooks (H1) and push the TVCR unit back by about 5cm.
Unlock the mains switch with mount by pressing on the hook (H2) and take it out of the groove (not for 14" units) (see Fig. D4 on page 2-18). Remove the mains cable from the cable guide.

WARNING: To ensure that no contact is made with the mains supply (110-240V), the mains plug must always remain fitted in its mount.

Remove the TVCR unit as follows:

3. Remove plug 1982/1983 to the keypad printed board (see Fig. D4 on page 2-18), plug 1931 (14") / 1932 and 1935 (25") / 1934 (20"/21") (mains cables), 1933 and 1950.
Discharge the picture tube, disconnect the high tension cable (EHT) and the earthing cable (AQUADAG).
Carefully remove the picture tube printed board (CRT).
Unplug the speaker cable 1997 from the cinch printed board.

4. Remove the TVCR unit from the groove (see Fig. D4 on page 2-18).

5. Unfasten the 6 screws (S3) and take the keypad printed board out of the groove (see Fig. D9 on page 2-18).

Installation is carried out in the reverse order.

B. Test point information

With this model, test pin or components leads are used as contact points for adjustment and checking. In case of other test points with no test pin or components leads, use the foil solder pad to connect the measuring equipment.

C. Removal or installation of flat cables

a. Removal
Pull out the flat cable, holding it securely to avoid damaging individual wires (see fig. 1-3).

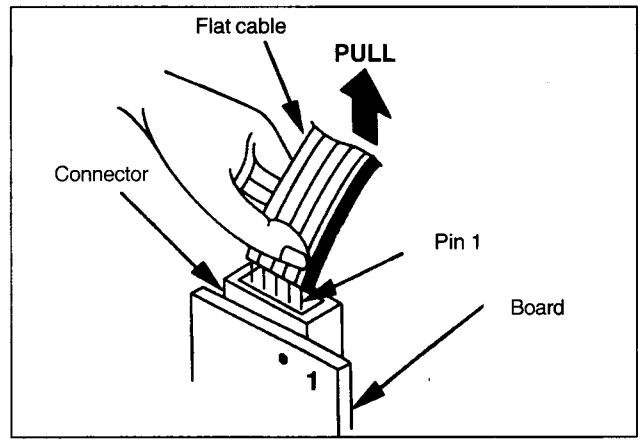

Fig. 1-3

Audio/CTL cable

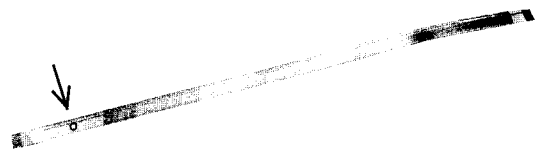

Fig. 1-3a

b. Installation
1. Adjust the position of the flat cable so that the lines on the flat cable align with the pins of the trap connector (see fig. 1-3).
2. Align individual wires with its individual trap connector hole. Then insert the flat cable wire into the trap connector.

CAUTION: After installation, inspect the connection to insure that individual wires are not bent or touching other wires.

D. Method for manual VCR loading / unloading

Turn the pulley of the loading motor.

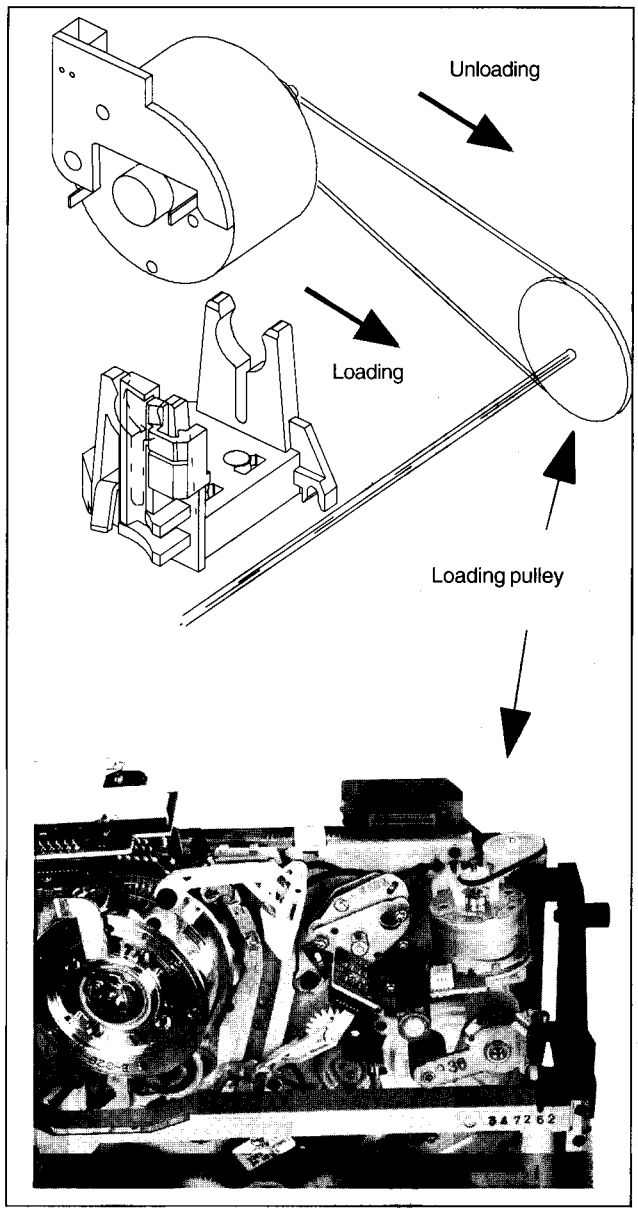

Fig. 1.4

E. Service test program

Service Status Menu

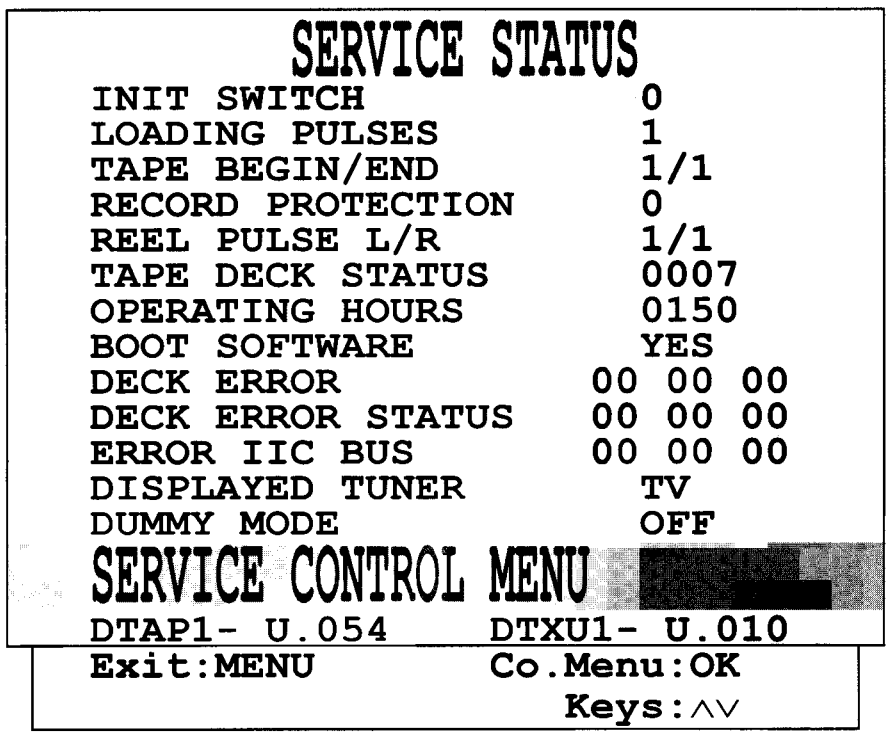

Fig. 1-5

Service Control Menu

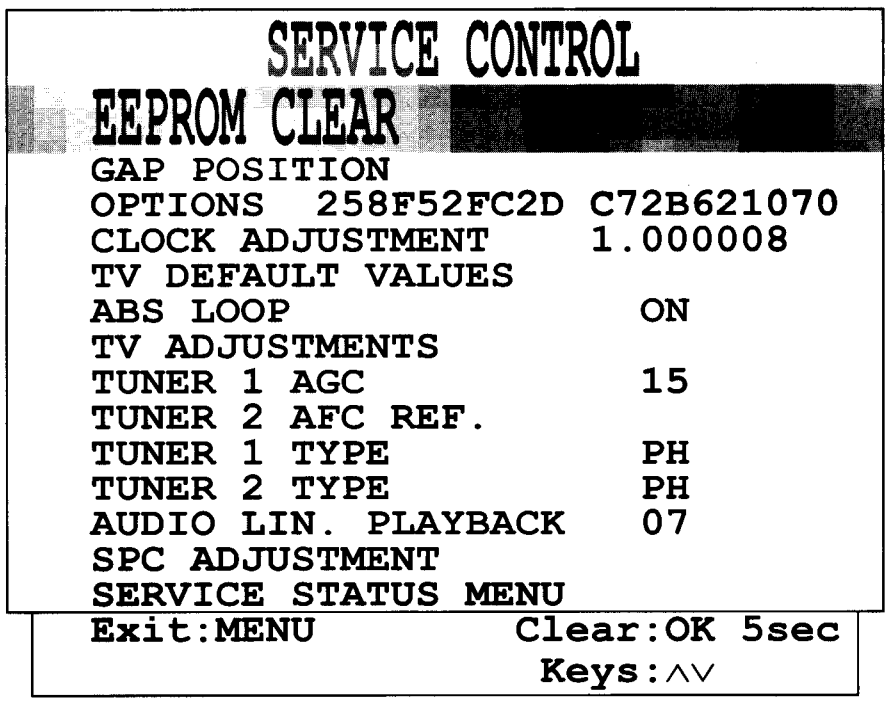

Fig. 1-6

E.1 Introduction

The software for the microprocessors contains a test program for service test purposes (Service mode), which is divided into two different OSD pages:

Service status

This menu displays the drive status, the functions of various sensors and the last three errors to occur. The operating hours for the drive are also displayed, along with the mask numbers for the deck and control-µPs.

Service control

All software-controlled adjustments and resets can be performed on this level. Selecting the line 'TV ADJUSTMENTS" leads to a third level which is used for various picture settings. During this process, the setting which is currently active is displayed on the top edge of the screen, and the rest of the menu is no longer displayed.

E.2 Calling up the service test program

Press the „STOP" button on the remote control, then the „PLAY" button on the unit, and hold down both buttons for approx. 5 seconds.
The first page in Service mode is displayed (see Fig. 1-5).

Note: If the key board is not connected (service position), the Play button on the RUBAD board (pos. 1910) can be used also. Pressing the Stop button on the remote control for at least 3 secs. ejects the cassette.

By selecting the "SERVICE CONTROL" line, you can access the second page in Service mode (see Fig. 1-6).

The service test program can be called up from all operating modes on the TVCR.

All drive functions are available from Service mode.

The service menu can be switched on and off by pressing the "MENU" button, and the Service mode remains activated. The normal menu for picture and audio settings, etc. is therefore only available again after Service mode is exited.

In Service Mode the Automatic Tracking is deactivated.

To exit the service test program, press the "STANDBY" button or switch off the unit.

E.3 Service status menu

E.3.1 Function of the Init switch

```
SERVICE STATUS
INIT SWITCH          0
LOADING PULSES       1
...
```

The Init switch is located on the drive. This button is used to display the status or the position of the drive, in combination with the loading pulses.

The following diagram (Fig.1 -7) displays the status of the Init switch in relation to the drive positions.

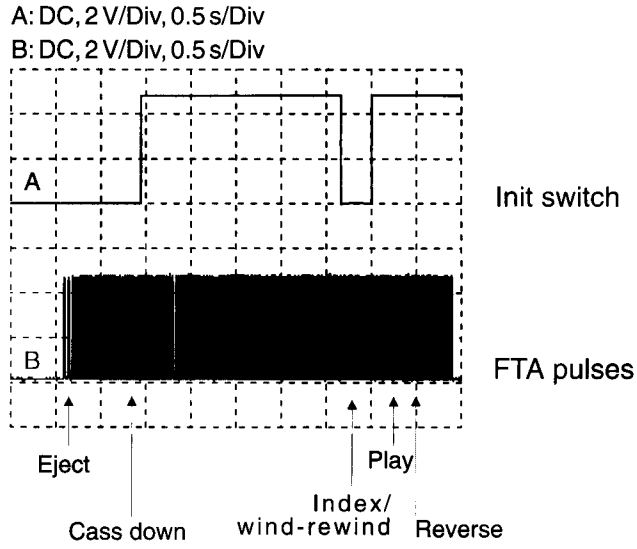

Fig. 1-7

E.3.2 Loading pulses

```
SERVICE STATUS
INIT SWITCH          0
LOADING PULSES       1
TAPE BEGIN/END       1/1
...
```

This display is used to indicate the evaluation of the „FTA" pulse (IC7900/pin4). This means that the rotations of the loading motor are recorded using a photo transistor, which results in the alternating display of „0" and „1".

E.3.3 Tape start/tape end detection

```
SERVICE STATUS
...
LOADING PULSES       1
TAPE BEGIN/END       1/1
RECORD PROTECTION    0
...
```

The start or end of the tape is detected by evaluating the „TAS" (Tape Start) and „TAE" (Tape End) signals. If the tape reaches the start or end of the tape, the display switches from „0" to „1".

E.3.4 Record protection

```
SERVICE STATUS
...
TAPE BEGIN/END       1/1
RECORD PROTECTION    0
REEL PULSE L/R       1/0
...
```

The control line „RECP" (Record Protection) gives information on whether or not the record protection on the tape is activated.

0 ... record protection OFF
1 ... record protection ON

E.3.5 Head drum pulses

```
SERVICE STATUS
...
RECORD PROTECTION      0
REEL PULSE L/R         1/0
TAPE DECK STATUS       0007
...
```

The evaluation of the tachometer winding signals „WTR" (Wind Tacho Right) and 'WTL' (Wind Tacho Left) results in the alternating display of „0" and „1".

E.3.6 Drive status

```
SERVICE STATUS
...
REEL PULSE L/R         1/0
TAPE DECK STATUS       0007
OPERATING HOURS        0150
...
```

This involves a counter for the „FTA" pulses. The counter status gives information on the current position of the drive (see Fig. 1 -7 and Fig. 1.8).

Drive positions:

Mode	Tape Deck Status
Eject	007 ±4
Index/Wind/Rewind	191 ±4
Stop	198 ±4
Play/Pause	214 ±4
Reverse	237 ±4

Fig. 1-8

E.3.7 Operating hours counter

```
SERVICE STATUS
...
TAPE DECK STATUS       0007
OPERATING HOURS        0150
BOOT SOFTWARE          YES
...
```

This counter displays the operating hours of the head motor.

E.3.8 Boot Software

```
SERVICE STATUS
...
OPERATING HOURS        0150
BOOT SOFTWARE          YES
DECK ERROR             FO 00 00
...
```

The "BOOT SOFTWARE" display gives information on the type of program memory used (IC7901/RUB). "YES" means that the unit is fitted with a FLASH module and therefore that a software update can be made via the service interface (1981). Where a conventional ROM/EPROM is fitted, "NO" will be displayed.

E.3.9 Drive error codes

```
SERVICE STATUS
...
BOOT SOFTWARE          YES
DECK ERROR             FO 00 00
DECK ERROR STATUS      C5 00 00
...
```

The last 3 drive errors to occur are stored in the EEPROM. The line „DECK ERROR" provides information on the type (Fig. 1 -9) and „DECK ERROR STATUS" on the time (Fig. 1 -10) of the error which has occurred.

The error data can be deleted by pressing the "CLEAR" button for at least 5 sec. with the line "DECK ERROR" or "DECK ERROR STATUS".

Error table

DECK ERROR	
00	No error
F0	Threading error
F1	Capstan error
F2	Tape broken
F3	Left reel blocked
F4	Right reel blocked
F5	Head drum blocked

Fig. 1-9

F0 Threading error

Occurs with missing threading pulses "FTA".

F1 Capstan error

This error occurs if there are no "FGD" pulses.

F2 Tape broken

The tacho signals from the left-hand reel "WTL" and the right-hand reel "WTR" are used as a reference for this monitoring function.

F3/F4 Left/right reel blocked

Missing reel pulse 'WTL' or "WTR".

F5 Head drum blocked

The "PG/FG" signal is used for this monitoring function. This is derived from the EMF from the non-current carrying coil in the head motor and provides information on the position and speed of the head drum.

Note: If one of the signals described is not available, the unit attempts to move the lift to the „EJECT" position.

Error status table

DECK ERROR STATUS			
0C	Standby	36	Stop
1F	Play -3	37	Record
29	Still Picture	70	Index
2A	Play +2	AC	Play -5
2C	Play -9	AD	Play +5
2D	Eject	C5	Standby Eject
2E	Play +9	D4	Slow motion 1/4
2F	Play -1	D7	Slow motion 1/7
30	Pause	D8	Slow motion 1/2
32	Rewind	DF	Gap adjustment
34	Wind	EE	Record Pause
35	Play	F7	Slow motion 1/10

Fig. 1-10

E.3.10 I²C-bus error

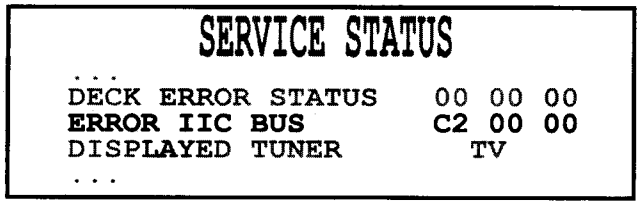

The communication between the µ-controller and all I²C-bus modules is checked each time the power is switched back on. If an error occurs during this process, the bus address for the relevant module is stored in the EEPROM. The 3 last error addresses to occur are stored and are saved even when the power is switched off. The error data can be deleted by pressing the „CLEAR" button for at least 5 sec. with the line „ ERROR IIC BUS".

Note: If an error occurs during communication with the EEPROMs or with the TXT µC, it will no longer be possible to re-start the unit. For this eventuality, a visual signal has been included which uses the LEDs.

- Record LED is flashing >> Error in EEPROM1 (IC7818/RUB)
- Timer LED is flashing >> Error in EEPROM2 (IC7801/TVB)
- Std By LED is flashing >> Error in TXT µC (IC7804/TVB)

The following table gives an overview of all the I²C-bus modules and their bus addresses.

ERROR IIC BUS				
Address	Position	Board	Description	
88	7800	APDOD	DPL35xx	Dolby Processing
80	7801	APDOD	MSP34xx	Stereo Decoder 1/Audio Processing
84	7670	RUB	MSP315D	Stereo Decoder 2
-- *	170x	TVB	UV1316	Tuner 1
-- *	1301	RUB	UV1316	Tuner 2
-- *	7004	RUB	LA71527M	Video /Linear Audio Processing
B8	7640	RUB	TDA9605H	FM-Audio Processing
20/21	7960	RUB	SDA5650	VPS/PDC Decoder
A2	7970	RUB	PCF8593P	Clock IC
8A/8B	7205	TVB	TDA 88xx	TV-Processing

Fig. 1-11

* ..... Error detection not possible for technical reasons.

E.3.11 Display on the second tuner (only for 2 tuner sets)

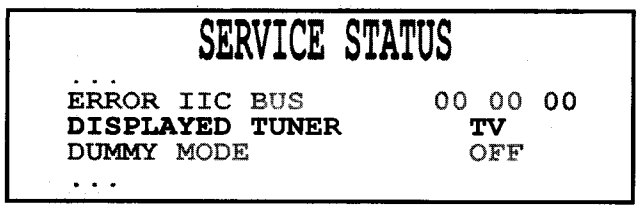

For repair work, it can be useful to display the picture from the second tuner, which is only used for recording. After selecting the „DISPLAYED TUNER" line, the cursor buttons " ◄ " an " ► " can be used to switch over between tuner 1 (TV) and tuner 2 (VCR).

E.3.12 Dummy Mode – operation without a drive

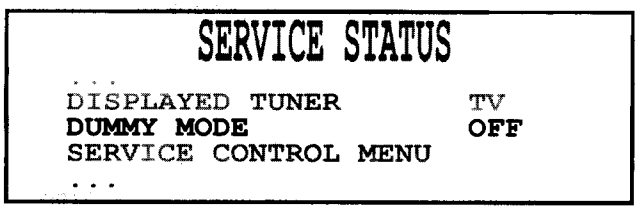

For measurements and signal tracing without a drive, the unit can be switched to Dummy Mode. This switches off all the motors and the sensors are ignored. The drive can be removed following activation (see Instructions for Removal). All drive statuses can now be selected (Play, Record,...) and the electronics (Video, Audio, IO) are switched to the relevant operating mode.
Dummy Mode can also be deactivated again with the drive installed, however the drive positions must not be changed whilst doing so, as the tape may otherwise be damaged.
Note: To prevent damage to the tape, Dummy Mode should not be switched On/Off whilst the tape is playing.
Caution: Unplug the unit from the mains before installing the drive.

E.3.13 µ-controller mask numbers

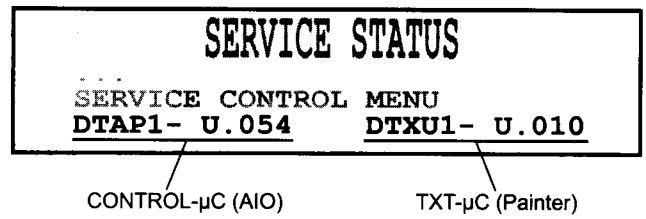

The mask and version numbers of the control and TXT-µC are displayed in the bottom line on the control menu. The first 5 characters identify the mask name (e.g. DTAP1), and the last 3 characters stand for the version number (e.g. U.054).

E.4 Service control menu

E.4.1 Deleting the EEPROMs

The EEPROMs (IC7818/RUB and IC7801/TVB) store all user-specific data (timer data, program data ....) and various setting values (gap position, picture settings ....). Under certain circumstances, it may sometimes be useful to delete this memory. By pressing the „CLEAR" button for at least 5 sec., the following data can be deleted:

- all timer data
- station data

The following values for the TV part, which are programmed at the factory, are taken from the ROM in the µ-controller:

- contrast
- brightness
- definition
- colour
- audio (volume, loudness, bass ....)

The following data are stored:

- all setting values
- option codes
- operating hours
- error codes

Caution:
After replacing the EEPROMs, only the values programmed at the factory are transferred. User-specific data and all setting values are reset to the medium values.
The unit should therefore be completely re-set (see Chapter 2 Settings) and configured.

E.4.2 Gap position

The description of this setting is given in **Chapter 2.E. Electrical settings**

E.4.3 Option codes

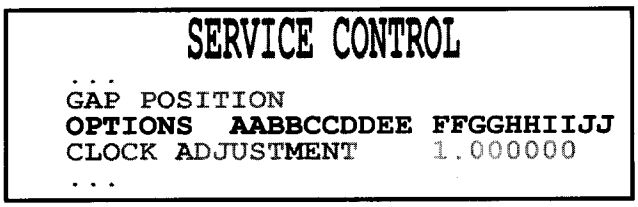

The characteristics of the unit are defined using the option codes. These are ten two-figure hexadecimal codes (A to J) which are printed on the nameplate on the unit (Fig. 1-12). After replacing the EEPROM (IC7818/RUB), the codes should be entered in the same order as in the service control menu.

After selecting the "OPTIONS" line, the numerical buttons on the remote control or the menu arrow keys "◄" and "►" can be used to start the input. Hexadecimal characters can then only be selected using the "▲" and "▼" buttons. Press the "OK" button on the remote control to confirm.

Note: The input can be cancelled by pressing the "MENÜ" button (service menu is switched off and the old values are retained). Pressing "MENÜ" again switches the service menu back on.

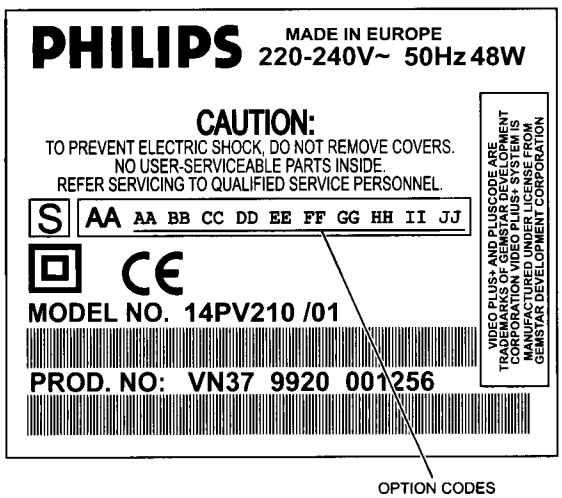

Fig. 1-12

E.4.4 Clock adjustment

The description of this setting is given in **Chapter 2.E. Electrical settings**

E.4.5 Basic TV settings

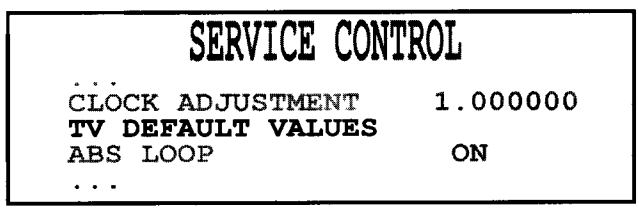

For various adjustments in the TV section, the picture settings (contrast, brightness....) have to be set to defined values. By pressing the „OK" button for at least 5 sec. on the „TV DEFAULT VALUES" line, the values programmed at the factory are loaded.

E.4.6 Autom. black current control (ABS LOOP)

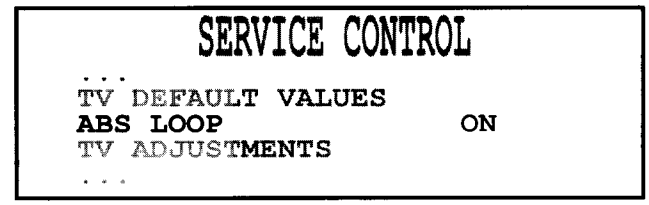

For repair purposes, it can be useful to deactivate the ABS (Automatic Black current Stabilisation). This deactivates the control, which, depending on the „ABS" information (IC 7205 pin 18), varies the level of the RGB outputs (pins 19,20,21).

The control loop can be switched ON/OFF using the menu arrow keys "◄" and "►".

Note: After leaving the service menu ("MENU" button or STD-BY), the ABS Loop is re-activated automatically.

E.4.7 TV adjustments

The descriptions of these settings are given in **Chapter 2.E. Electrical settings**

E.4.8 Tuner 1 AGC

The description of this setting is given in **Chapter 2.E. Electrical settings**

E.4.9 Tuner 1 Type

The description of this setting is given in **Chapter 2.E. Electrical settings**

E.4.10 Tuner 2 Type

The description of this setting is given in **Chapter 2.E. Electrical settings**

E.4.11 Tuner 2 AFC reference

The description of this setting is given in **Chapter 2.E. Electrical settings**

E.4.12 Audio linear playback

The description of this setting is given in **Chapter 2.E. Electrical settings**

E.4.13 SPC adjustment

The description of this setting is given in **Chapter 2.E. Electrical settings**

F. Hotel mode

For operation in hotels, hospitals, etc., there is the option of blocking various unit functions (settings) and limiting the volume to a required maximum level.

Proceed as follows to activate hotel mode:

- Set the volume to the maximum value required
- Select program number 38 (if it cannot be selected using program Up/Down, enter it directly using the numerical buttons)
- Hold down the "STOP" button on the remote control and on the unit together for approx. 5 sec. until "H+" appears on the screen.

Deactivating hotel mode:

- Select program number 38 (if it cannot be selected using program Up/Down, enter it directly using the numerical buttons)
- Hold down the "STOP" button on the remote control and on the unit together for approx. 5 sec. until "H-" appears on the screen

G. Customer Service Mode (CSM)

G.1 General

Answering customer questions on the phone is a lot easier if the customer could be more specific about his problem. Once the Customer Information Center CIC knows the problem in the most cases the answer is easy. The Customer Service Mode helps customers to be more specific in their questions by providing them with a built in menu driven on-screen diagnostics system. It therefore helps dealers and CIC to provide fast and correct answers via phone.

The system enables:

- Easier handling of non-technical calls.
- More reliable information to the customer that a repair action is necessary.
- Identification of software versions via phone.

The Customer Service Mode is a read only, menu based information system which can be called up by the customer at home.

G.2 Calling up the Customer Service Mode

To enter the customer service mode press first STOP on the set and then MENU on the remote control and keep the keys depressed for a period of 5 seconds.
This procedure works independently of the status of Child Lock (if this feature is available) or the VCR adress.

G.3 Operation inside the CSM

All deck functions are possible. Functions which need a menu are not allowed.
By the help of the cursor up/down the customer can step through all stored programs.
Toggling between two tables is possible by pressing the MENU button on the remote control.

G.4 Deactivation

The customer can deactivate the Customer Service Mode by pressing 'STANDBY' on the VCR.

G.5 Contents of the Customer Service Mode

Table 1

```
CUSTOMER SERVICE MODE 1                13:47
1  VERSION DTA 0012        j  DECK F0 -- --
2  VERSION DTX 0002        k  IIC  BA -- --
3  PRG 02 NAME ORF-2       l  SYSTEM     PAL
4  TUNE 591 - 10           m  DECODER    OFF
5  MODE TUNER --           n  CASS     E180
6  VCR ADDRESS V1          o  REMOTE      TV
7  PP VOLUME 025           p  AUTO VOL   OFF
8  PP COLOUR 015           q  E1 PIN8    LOW
9  PP BRIGHTNESS 023       r  HOTEL      OFF
a  PP CONTRAST 012         s  16:9       OFF
b  SHARPNESS 006           t  CHILDL     OFF
c  CONTRAST+ OFF           u  ENDLESSP    ON
d  SMART V NATURAL         v  RECPROT    OFF
e  SMART A INCREDIB.       w  DOLBY      YES
f  AUDIO OUT STEREO

g  WARNING PROTECTED CASSETTE
```

Indicator	Keyword	Values	Description
	XX:XX		current time, if clock not set „--:--"
1	VERSION DTA	e.g. 0001	Build number of the AIO (central controller)
2	VERSION DTX	e.g. 0001	Build number of painter (TXT, OSD,... Controller)
j	DECK		Deck Error Codes according to chapter 4.5.10
k	IIC		IIC Error Codes according to chapter 4.5.12
3	PRG	E1,E2,01...99	Program number (in playback „- -")
	NAME		Detected transmitter name (in Playback „-")
l	SYSTEM		depends on spec. of set, e.g. PAL BG, M, N SECAM / MESEC / NTSC or B/W; in REC/EE received colour system, in PB system from tape
4	TUNE		Frequency or Channel (dependent on actual selection) +optional value of fine tuning e.g. „591.25 -1" or „CH36 -1" or „CAxx", (during playback „-")

Indicator	Keyword	Values	Description
m	DECODER	ON, OFF	Decoder mode
5	MODE		Tape deck mode e.g. SCAN -11, Record Modes...,last 2 digits >> Tape Speed = LP or blank
6	VCR ADDRESS	V1, V2	VCR address (VCR1, VCR2)
7	PP VOLUME		Volume (not actual value but Personal Preference setting)
8	PP COLOUR		Colour (not actual value but Personal Preference setting)
9	PP BRIGHTNESS		Brightness (not actual value but Personal Preference setting)
a	PP CONTRAST		Contrast (not actual value but Personal Preference setting)
b	SHARPNESS		Sharpness setting
c	CONTRAST+	ON, OFF	Contrast +
d	SMART V	NATURAL, PERSONAL ,RICH,....	Smart picture setting according FRS only for sets with Smart picture, otherwise greyed out
e	SMART A	PERSONAL, INCREDIBLE, SPATIAL,...	Smart audio setting according FRSonly for sets with Smart audio, otherwise greyed out
f	AUDIO OUT		in Playback: MONO - L - R - ST - MIX;in Record or TV-mode: MONO - STEREO - I - II
g	WARNING		Last warning info according [FRS] (is stored in RAM until power down)
n	CASS	e.g. E240	Cassette length. Displays "E - - -" if no cassette in or not yet detected.
o	REMOTE	TV, V1, V2	Last detected remote address (TV, VCR1, VCR2) DETECTION INDEPENDENT OF VCR ADDRESS
p	AUTO VOL	ON, OFF	Autom. Volume Control
q	E1 PIN8	HIGH, LOW	Scart 1 Pin 8
r	HOTEL	ON, OFF	Hotel mode
s	16:09	ON, OFF	16 by 9 mode
t	CHILDL	ON, OFF	Child lock
u	ENDLESSP	ON, OFF	Endless play (Repeat)
v	RECPROT	ON, OFF	Record Protection
w	DOLBY	YES, NO	Dolby signal detected.only for sets with Dolby, otherwise greyed out

Table 2

```
CUSTOMER SERVICE MODE 2                    13:47

    YEAR 1999      MONTH 04      DAY 20

                                          VPS
  DATE  PROG.  START  END      LP  PDC  REP  .
1  21   CNN    12:38  14:38    -    *   ONCE
2  XX   XXXXX  XX:XX  XX:XX    -    -   XXXX  X
3  XX   XXXXX  XX:XX  XX:XX    -    -   XXXX  X
4  XX   XXXXX  XX:XX  XX:XX    -    -   XXXX  X
5  XX   XXXXX  XX:XX  XX:XX    -    -   XXXX  X
6  XX   XXXXX  XX:XX  XX:XX    -    -   XXXX  X



V/P DET VALID
```

Keyword	Description
XX:XX	current time, if clock not set „--:--"
YEAR	current year
MONTH	current month
DAY	current day
DATE	Timer date
PROG.	Timer programme
START	Start time
END	End time
LP	Longplay On,Off
VPS/PDC	VPS/PDC On,Off
REP.	Repetition (ONCE, WEEKL, ...)
V/P DET	Currently detected VPS/PDC signal (ERROR, VALID), in playback "-"

H. How to move the cassette holder to the down position

To move the cassette holder in the down position without a cassette tape, use the following procedure.

1. Disconnect AC plug.
2. Remove the VCR unit from the set in the sequence described in the "dismantling cabinet parts" section (chapter 2).
3. Turn the loading pulley counterclockwise (front view) u n t i l the cassette compartment is locked by the right locking tab (fig. 1-13).
4. Clear the right locking tab by moving the lever forward (fig. 1-13).
5. Turn the loading pulley counterclockwise (front view) until the cassette compartment is locked by the left locking tab (fig. 1-13).
6. Clear the left locking tab by pressing down the lever (fig. 1-13).
7. Continue to turn the loading pulley until the cassette down position is obtained.

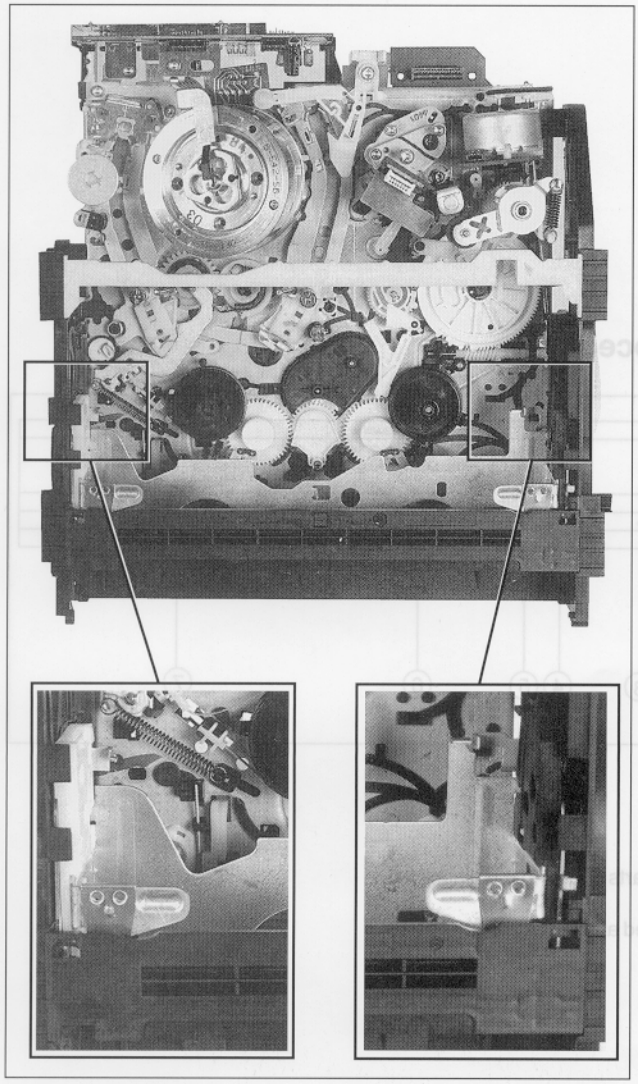

Fig. 1-13

I. How to remove the lift assembly

The lift can be removed and refitted in all deck positions with the exception of the "EJECT" position (the best position is: cassette compartment down, click stop).

To remove the cassette-up assembly:

1. Free the holding bracket (fig. 1-14) by rotating it up and back from the upper end.
2. Unscrew the 4 screws on the underside of the deck (fig. 1-15)
3. Carefully remove the cassette-up assembly vertically, noting t h e position of the record protect operating lever (at top).

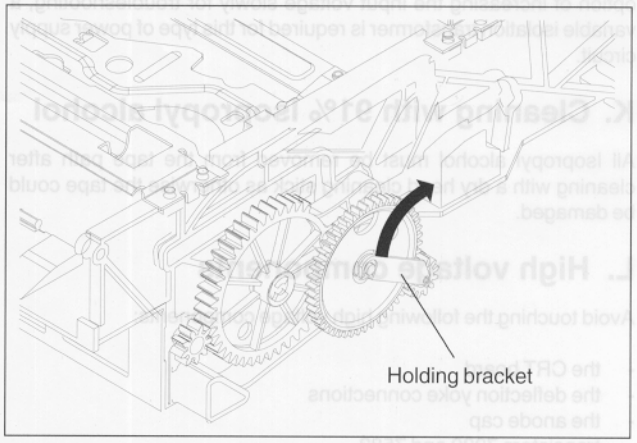

Fig. 1-14

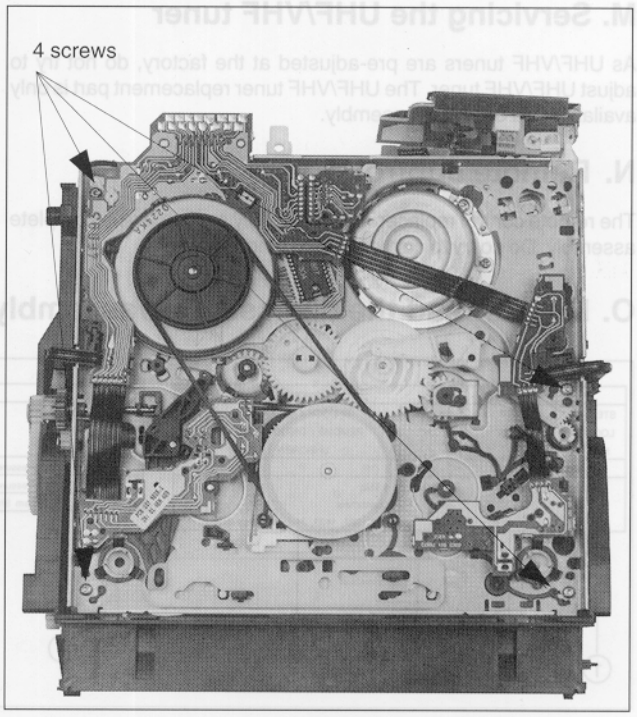

Fig. 1-15

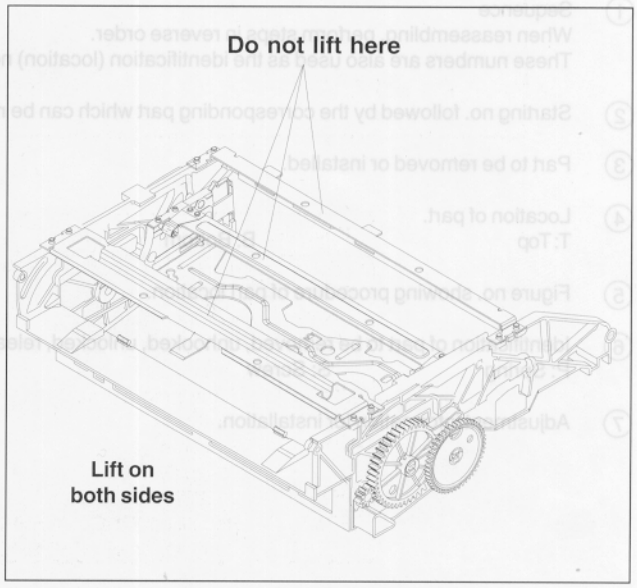

Fig. 1-16

J. Variable voltage isolation transformer

Because a hot chassis ground exists in the switched mode power supply circuit, an isolation transformer must be used. To have the option of increasing the input voltage slowly for troubleshooting, a variable isolation transformer is required for this type of power supply circuit.

K. Cleaning with 91% Isopropyl alcohol

All Isopropyl alcohol must be removed from the tape path after cleaning with a dry head cleaning stick as otherwise the tape could be damaged.

L. High voltage components

Avoid touching the following high voltage components:

- the CRT board
- the deflection yoke connections
- the anode cap
- transistors 7330 and 7583
- the terminals of the Flyback transformer.

M. Servicing the UHF/VHF tuner

As UHF/VHF tuners are pre-adjusted at the factory, do not try to adjust UHF/VHF tuner. The UHF/VHF tuner replacement part is only available as a complete assembly.

N. Remote control

The remote control replacement part is only available as a complete assembly. Do no try to dismantle the remote control.

O. How to read the disassembly/assembly procedures

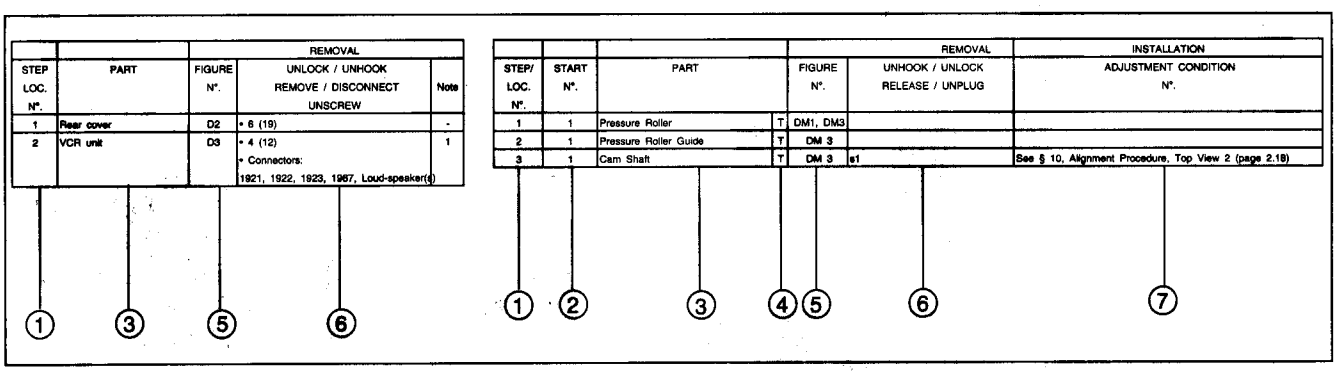

STEP LOC. N°.	PART	REMOVAL FIGURE N°.	REMOVAL UNLOCK / UNHOOK REMOVE / DISCONNECT UNSCREW	REMOVAL Note
1	Rear cover	D2	• 6 (19)	-
2	VCR unit	D3	• 4 (12) • Connectors: 1921, 1922, 1923, 1967, Loud-speaker(s)	1

STEP/ LOC. N°.	START N°.	PART		REMOVAL FIGURE N°.	REMOVAL UNHOOK / UNLOCK RELEASE / UNPLUG	INSTALLATION ADJUSTMENT CONDITION N°.
1	1	Pressure Roller	T	DM1, DM3		
2	1	Pressure Roller Guide	T	DM 3		
3	1	Cam Shaft	T	DM 3	s1	See § 10, Alignment Procedure, Top View 2 (page 2.19)

① Sequence
When reassembling, perform steps in reverse order.
These numbers are also used as the identification (location) no. of parts shown in the diagrams.

② Starting no. followed by the corresponding part which can be removed at this stage.

③ Part to be removed or installed.

④ Location of part.
T: Top B: Bottom

⑤ Figure no. showing procedure of part location.

⑥ Identification of part to be removed, unhooked, unlocked, released, unplugged, unsoldered etc.
P: Spring S: Screw

⑦ Adjustment information for installation.

B. MECHANICAL ADJUSTMENT PROCEDURES

1. DISMANTLING THE CABINET PARTS

1. Dismantling flow chart

This flow chart indicates the steps for dismantling the cabinet parts and the boards in order to gain access to the items for service. When reassembling, perform the steps in reverse order.

Caution:
Disconnect AC plug before dismantling.

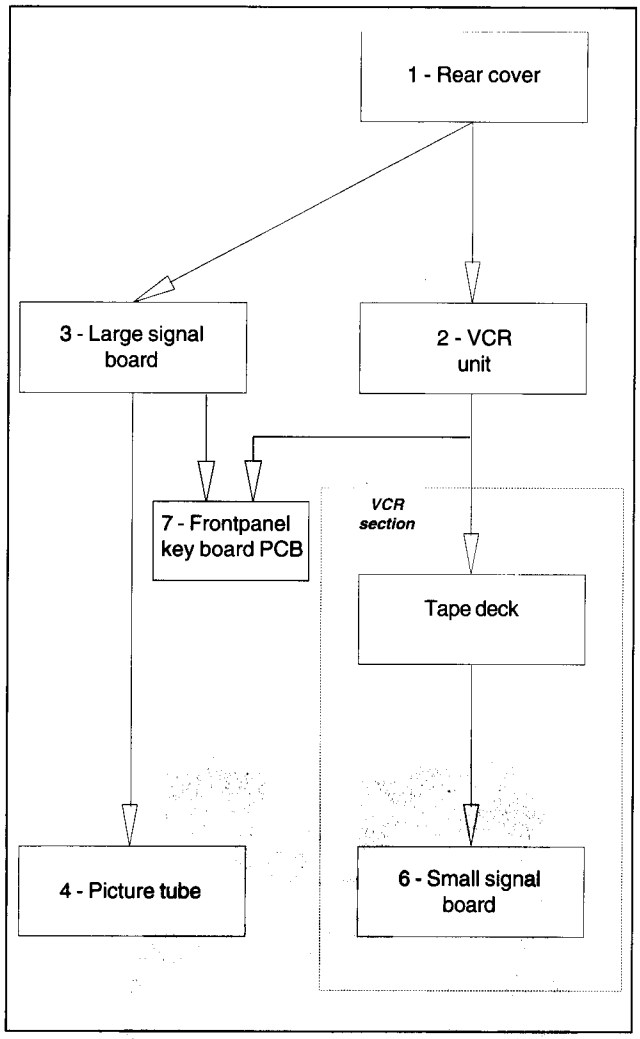

Fig. D1

2. Dismantling

STEP LOC. Nr.	PART	REMOVAL FIG. Nr.	REMOVAL UNLOCK / UNHOOK REMOVE / DISCONNECT UNSCREW	Note
1	Rear cover	D2	6(55)	
2	VCR-unit	D4	4(51) Connectors: 1933 Cinch print	1
5	Tape deck	D5	6(S1)	
6	Small signal board	1_1	Connector:1912,1947,1948,1961,1965 Tape deck; 1(M)	5
3	Large signal board	D8	4(51) Switch board and its holder	2
4	Picture tube	D9	Anode cap and CRT board TVCR-unit Deflection yoke connector Degaussing coil connector 4(54)	2+3
7	Key board pcb	D9 D10	TVCR-unit Picture tube pcb Loudspeaker 6(S3)	

Abbreviations list:
6 (19) = 6 screws (19)

1. When reinstalling:
Ensure the tape deck unit is mounted completely on the small signal board. When inserting the TVCR unit in the set housing, the lever which serves to open the lift flap has to be pushed into the flap guide.

2. To remove the picture tube, proceed as follows:
   1) Discharge the anode to CRT Ground. Then remove the anode cap.
   2) Carefully pull-out the CRT board from the tube.
   3) Disconnect the deflection yoke connector and the degaussing coil connector from the large signal board.
   4) Place the set face down on a soft cloth before removing the picture tube.

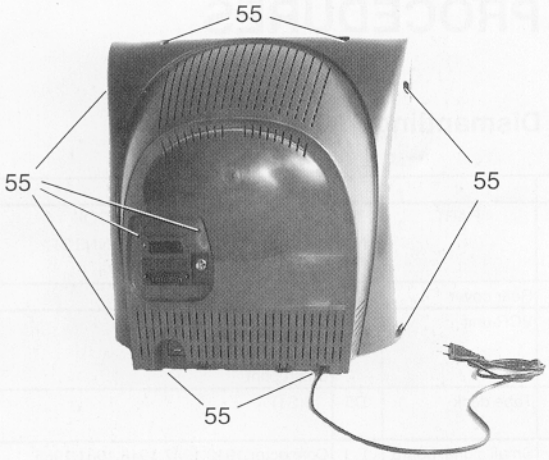

fig. D2

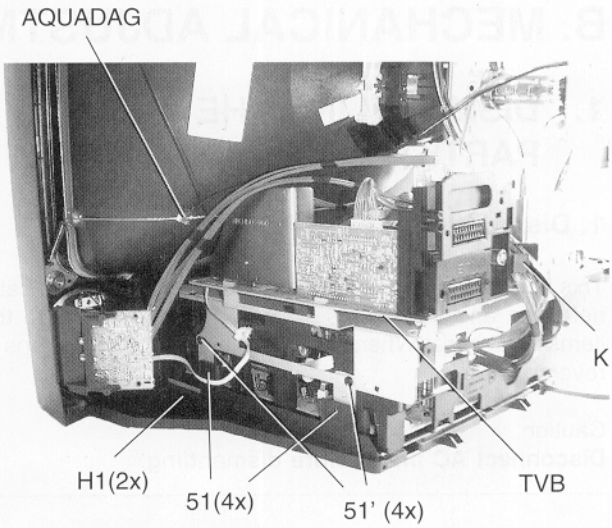

fig. D3

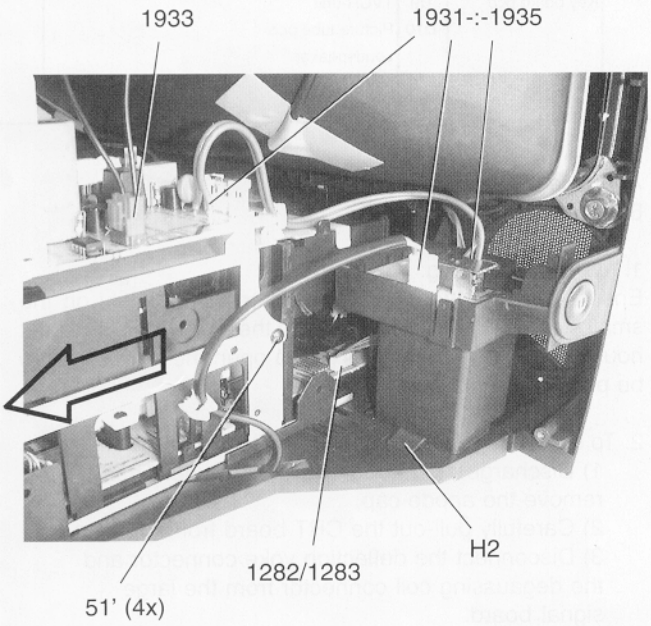

fig. D4

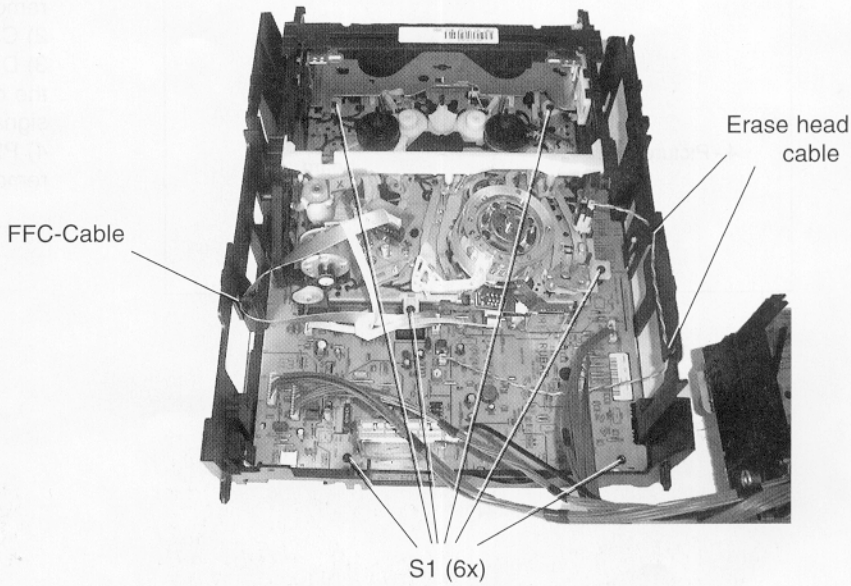

fig. D5

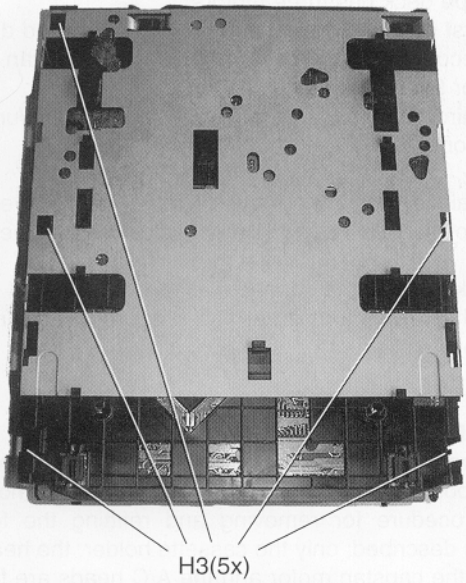

fig. D6

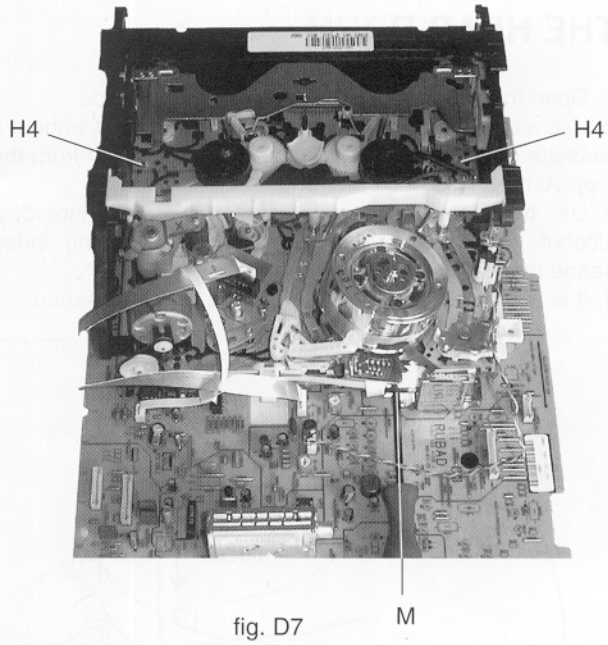

fig. D7

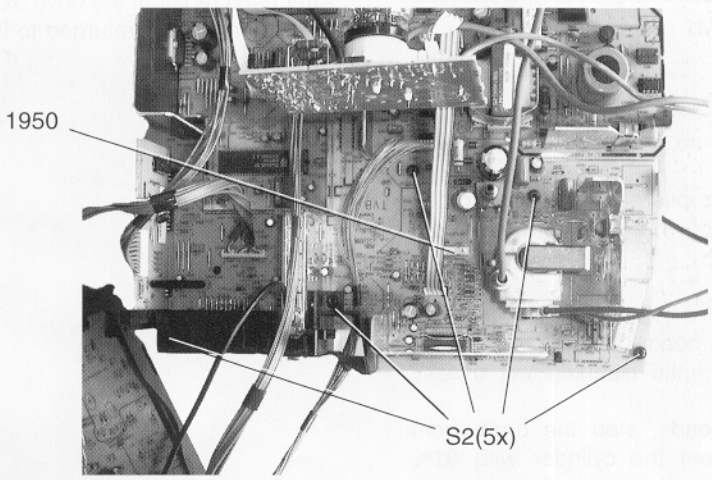

fig. D8

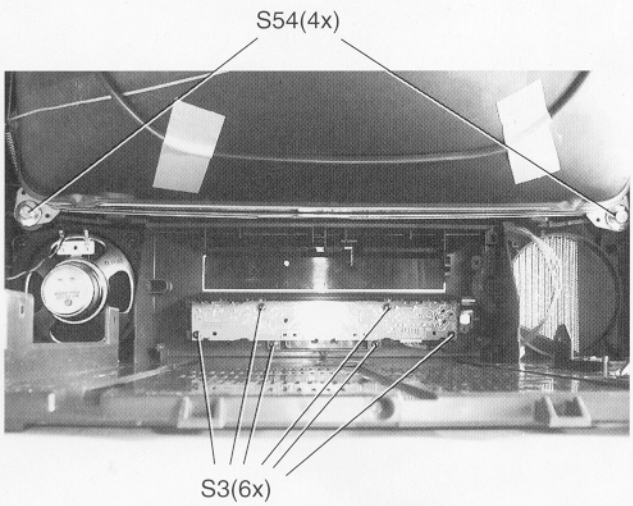

fig. D9

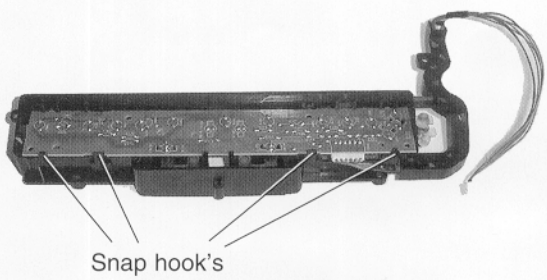

fig. D10

2. PROCEDURE FOR CLEANING THE HEAD DRUM

1. Open the set to gain access to the video heads.
2. Use a cassette with no tape or operate the set without a cassette (in this case, unplug the LED light prism from the top). Activate the play mode.
3. Use two cleaning cloths moistened with 91% Isopropyl alcohol. Press them gently against the rotating video heads (see fig. M1).
4. It is recommended that the full tape path is cleaned.

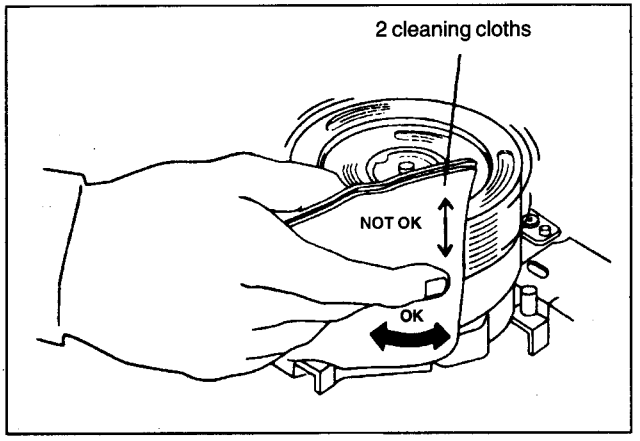

Fig. M1

CAUTION:
• Never operate or turn the drum in a clockwise direction (top view).
The oil in the one way spiral groove bearing will be forced out, causing premature breakdown of the drum motor.

NOTES:
• Do not rub vertically.
• Do not apply pressure to the head. If contaminant is not easily removed, continuous gentle cleaning will usually remove it.
• After cleaning the video heads, stop the drum from rotating, clean fingerprints from the cylinder with 91% isopropyl alcohol. Do not touch drum assembly with bare hands, use nylon gloves.

CAUTION:
All 91% isopropanol alcohol must be removed from the tape path after cleaning using a dry head cleaning cloth, as otherwise tape damage may be caused.

TAPE DECK MECHANISM

This tape deck has three motors:
• the first provides a precision drive for the head drum
• the second provides a direct drive for the capstan and belt drive for the reel tables
• the third motor drives the lift and tape loading/unloading operations.

To obtain a high repair standard we have developed a range of service kits (see mechanical replacement parts list).
These kits cover the connected spare parts.
With the exception of kit M, kits must be replaced completely.

DECK PARTS REPLACEMENT

This procedure starts with the cabinet parts, the small signal board and the cassette holder already removed.
The procedure for removing and refitting the following parts is described; only the cassette holder, the head drum motor, the capstan motor and the A/C heads are fixed by screws.
All other deck assembly parts are held by snap hooks.

IMPORTANT:
After each repair of the drive assembly, the cassette holder must be manually returned to the "EJECT" position.

3. ADJUSTMENT PROCEDURES

1. Upper cylinder replacement

Work with extreme care when removing or replacing the head disc. Do not touch video heads during servicing.

Removal:

- Remove the deck from the large signal board (refer to disassembly method on page 2-1, steps 2, 5 and 6).
- Nylon gloves should be worn when handling the upper cylinder.
- Remove 2 screws from the head amplifier bracket to gain access to the upper cylinder.
- Turn the upper cylinder until the oblong hole in the inner rotor is seen through the bigger hole of the lower portion of the cylinder motor.
- Insert reference pin C (included with each service upper cylinder) through the bigger hole of the lower cylinder motor until the pin snaps into the oblong hole on the inner rotor.

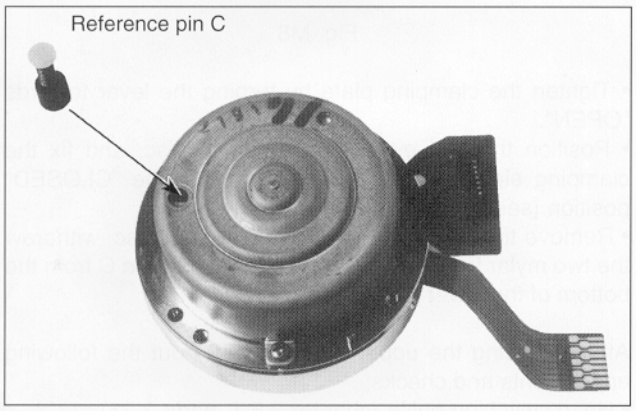

Fig. M2

- Align the upper cylinder removal tool's reference element with the ∇ symbol (Fig. M3) to remove the upper cylinder's upper clamping plate (short pins).

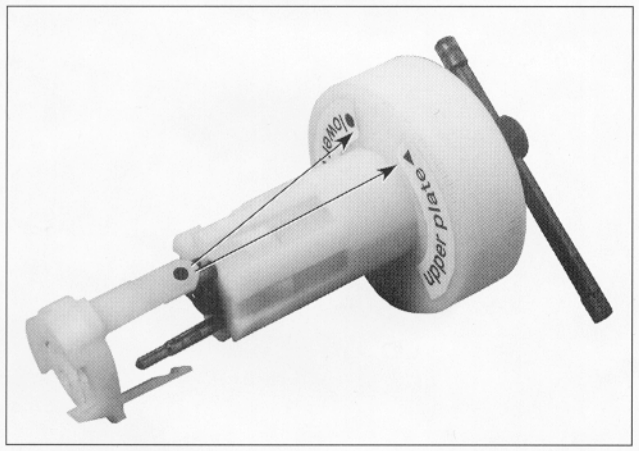

Fig. M3

- Position the upper tool's arm in the closed position, then place it on the upper clamping plate through the three holes. Turn the tool's arm 90° to the open position and remove the upper clamping plate from the upper cylinder (fig. M4).

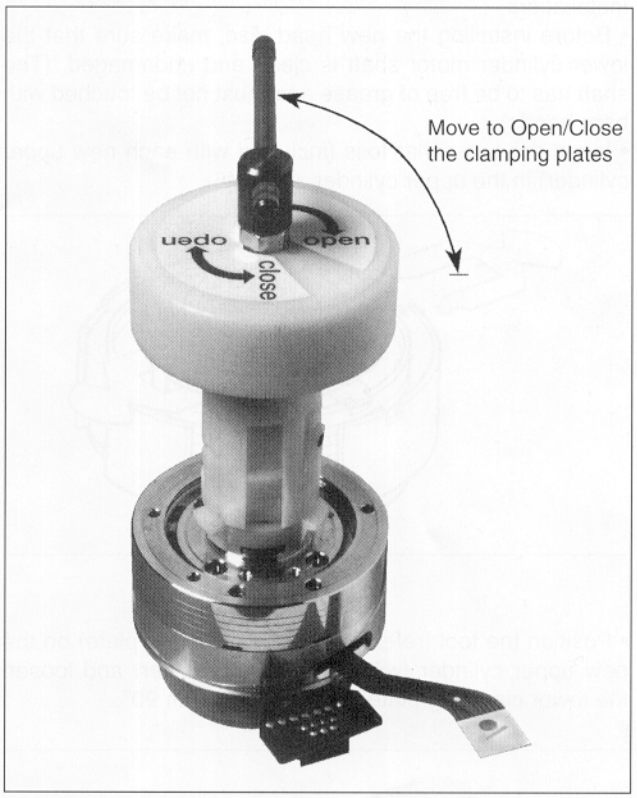

Fig. M4

- Pull the Upper Cylinder Removal Tool's reference element and align it with the O for the removal of the upper cylinder's lower clamping plate (long pins; see fig. M3).

Position the upper tool's arm in the CLOSED position, then place it on the lower clamping plate through the three holes of the upper cylinder. Ensure that all three pins snap into the lower clamping plate.

Loosen the clamping plate by turning the tool's arm 90° in the OPEN position. Remove the upper cylinder.

Fig. M5

Installation:
• Before installing the new head disc, make sure that the lower cylinder motor shaft is clean and undamaged. (The shaft has to be free of grease and must not be touched with bare hands).
• Insert the two mylar foils (included with each new upper cylinder) in the upper cylinder. (Fig. M6)

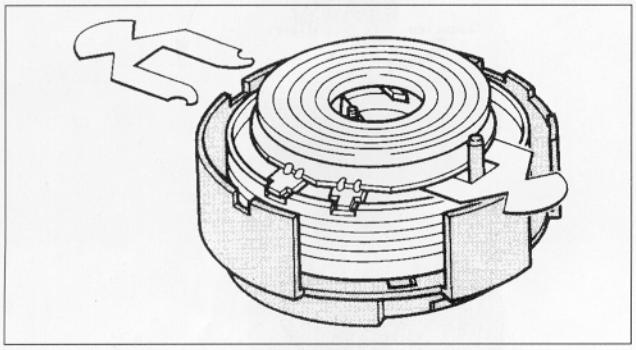

Fig. M6

• Position the tool (reference: lower clamping plate) on the new upper cylinder (with its protective cover) and loosen the lower clamping plate by turning the arm 90°.

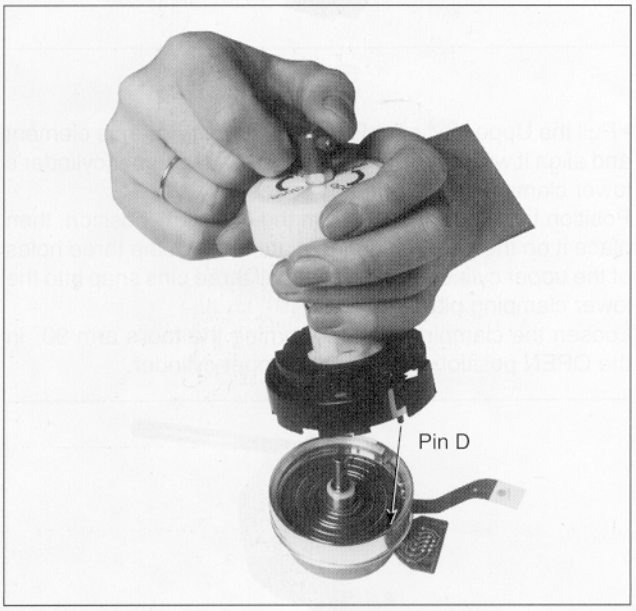

Fig. M7

• Position the upper cylinder so that pin D of the protective cover engages in the hole of the stator (the arrow on the protective cover must point towards the lower cylinder print; see fig. M7).

• Reach the exact position by pressing the tool down with a force of 1N and fix the lower clamping element by turning the arm towards "CLOSED".
• Remove the tool.
• Change the tool to "upper clamping plate" and position the clamping element exactly (see fig. M8).

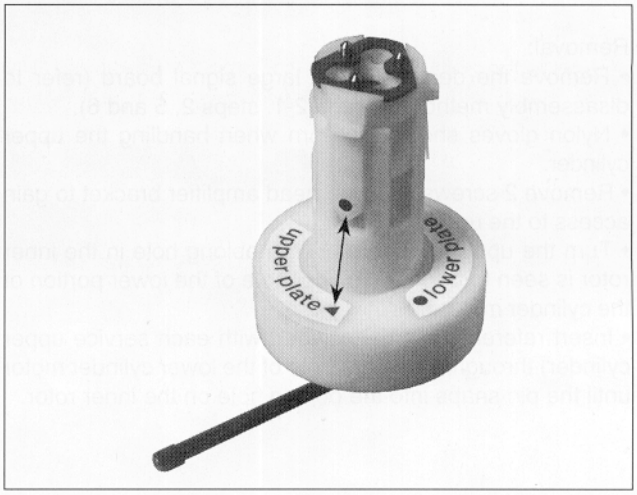

Fig. M8

• Tighten the clamping plate by turning the lever towards "OPEN".
• Position the tool evenly on the head disc, and fix the clamping element by bringing the arm to the "CLOSED" position (see fig. M4)
• Remove the protecting cap from the head disc, withdraw the two mylar foils and remove the reference pin C from the bottom of the lower cylinder.

After replacing the upper cylinder, carry out the following adjustments and checks:
• Head switching pulse (chapter 3.5.1, page 2-35).
• Record current adjustments (chapters 3.6.1, 3.6.2, page 2-36).
• Tape path alignment (chapter 4, page 2-8).

2. Replacing the scanner assy. / head drum motor

Work with extreme care when removing or replacing the scanner assy./lower cylinder motor. Do not touch Video Heads during servicing.

1. Remove the VCR unit (page 2-1).
2. Remove the tape deck assembly from the VCR unit.
3. Remove the head amplifier bracket and the upper cylinder.
4. Remove the 3 screws holding the head drum motor.

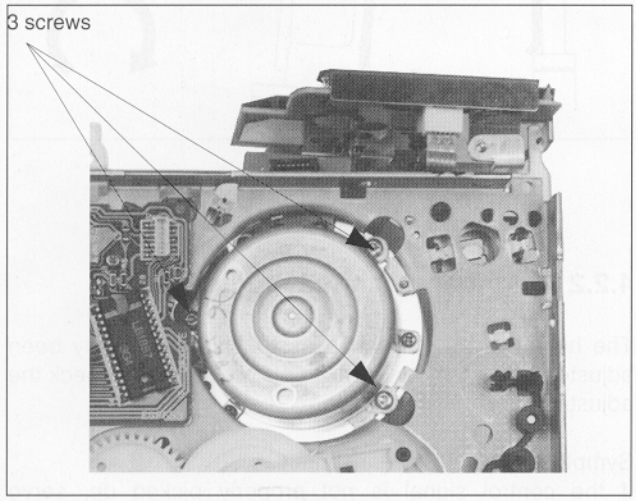

Fig. M9

5. Reinstall the new scanner assy./head drum motor onto the chassis by reversing the procedure previously described.

Note:
If any of the parts of the tape path are touched, clean them with a cleaning cloth saturated with 91% isopropyl alcohol.

3. Position adjustment of the tension arm

3.1 Brake band adjustment

• Set the drive to PLAY mode.
• Adjust the brake band my means of adjusting tool (from the underside of the deck) until the edge of the elbow of the tape tension arm overlaps with the left inner edge of the left guide (see fig. M10/M11).

3.2 Tape tension adjustment

• Play a cassette tape (E180) from the beginning of the tape.
• Measure the tape tension before the left roller unit with a Tentelometer.
• Adjust (from the underside of the drive) the tension arm spring, pos. 11, to a tape tension of 0.24N ± 0.02N e.g. 24g ± 2g with the adjustment tool (see fig. M10/11).

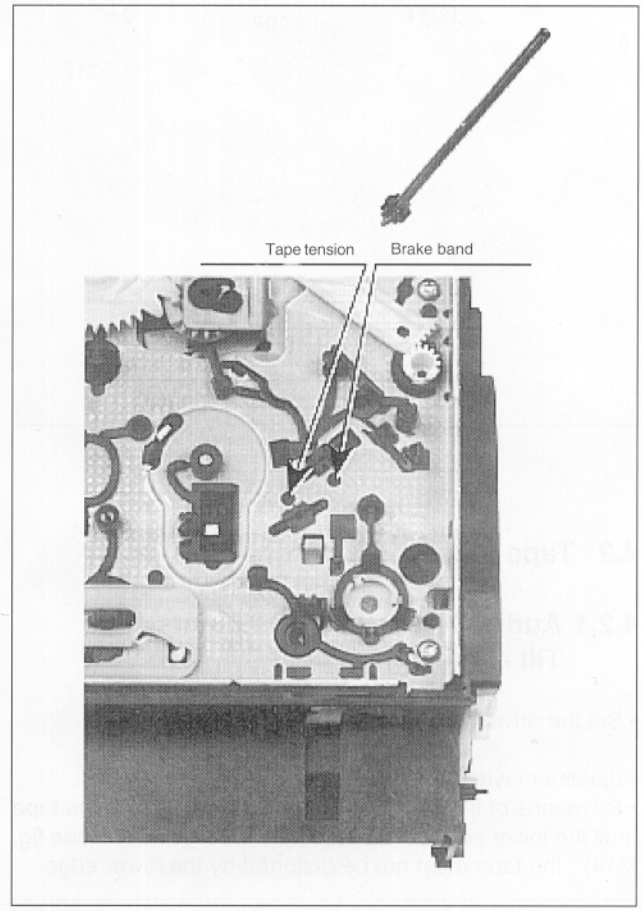

Fig. M10

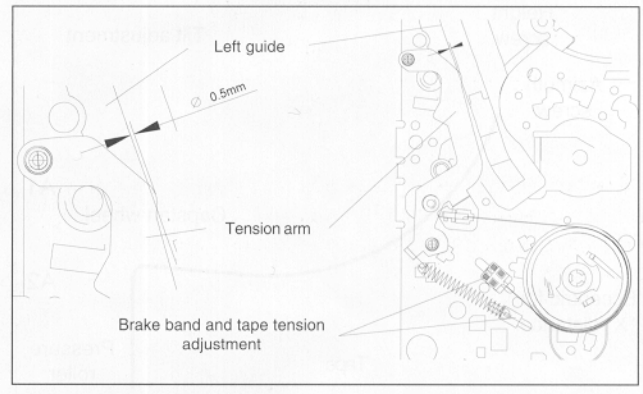

Fig. M11

4. Tape path adjustment (final adjustment)

4.1 View of the tape path

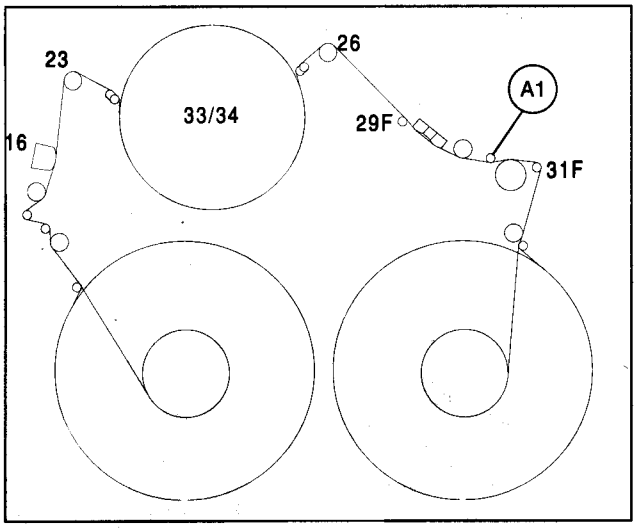

Fig. M12

4.2 Tape path adjustment

4.2.1 Audio/CTL head adjustments Tilt angle adjustment

• Set the drive to the "SEARCH FORWARD" mode.

Adjustment **with** tape guide A1:
• By means of the tilt angle adjusting screw, move the tape until the lower edge just touches the tape guide A1 (see fig. M14) ; the tape must not be distorted by the lower edge.

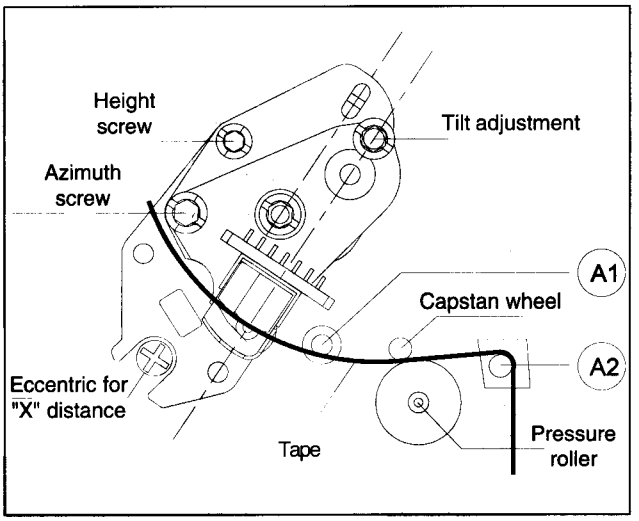

Fig. M13

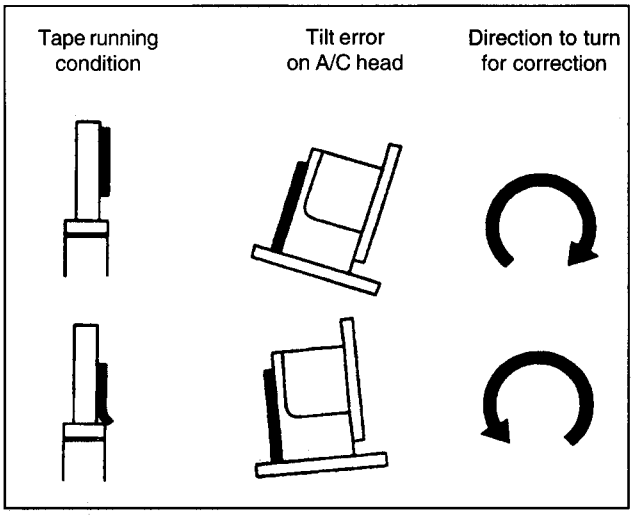

Fig. M14

4.2.2 Height and azimuth adjustments

The height of the A/C head assembly has already been adjusted at the factory, so it is only necessary to check the adjustments.

Symptom of incorrect adjustment.
If the control signal is not properly picked up, servo operation cannot be achieved.

This control is required if the A/C head has been replaced, or if it is completely incorrectly adjusted.

1. Basic height adjustment

Looking at the lower edge of the control head, with a E180 cassette tape in motion, ensure that the lower edge of the tape runs 0.25 mm above the lower edge of the control head.

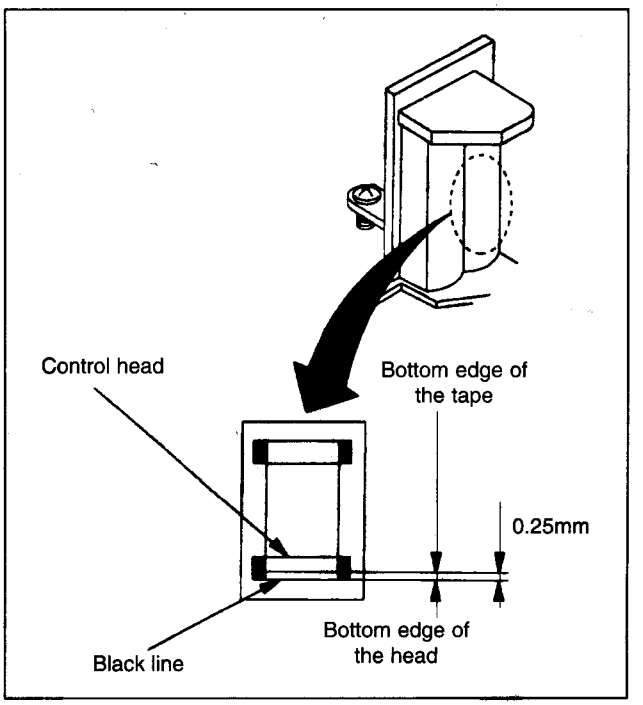

Fig. M15

2. Final height and azimuth adjustment

Symptom of incorrect adjustment:
If the position of the A/C head is not properly adjusted, the audio S/N ratio is poor.

- Connect an oscilloscope to the linear audio output.
- Play the 1 kHz audio section on the test cassette.
- Adjust for maximum output voltage by means of the height adjustment screw (see fig. M15).
- Play the 6 kHz audio section on the test cassette.
- Adjust to maximum output voltage by means of the azimuth adjustment screw. (fig. M15)
- If necessary, repeat this procedure
- Check the tilt angle adjustment (see chapter 4.2.1).

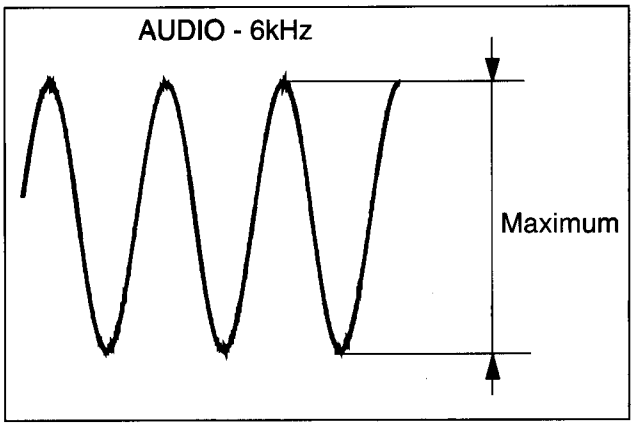

Fig. M16

If the tape path was completely out of adjustment or if several components in the tape path have been replaced, the above mentioned adjustments might have to be repeated several times.

4.2.3 "x" distance adjustment

- Before starting this adjustment, set the VCR in the "EJECT" position.
- Activate the Service Mode according to the description on page 1-11 (automatic Tracking is not active in Service Mode).
- Insert the test cassette and enter the PLAY mode.
- Playback the Black & White part of the test cassette.
- Display the TRIV signal on an oscilloscope (DC-coupled) and adjust for maximum voltage by means of the eccentric screw (fig M13).

5. Control with the TRIV signal of the tape path adjustment

Symptom of incorrect adjustment:
If the envelope output is poor, the picture will contain a lot of noise. In this case the tracking will lose precision and the playback picture will be distorted by any slight variation of the tracking control circuit.

5.1 Left and right roller unit

Preparation:
- Connect one input of a dual trace oscilloscope to observe the tape sync pulse and the other input (DC coupled) to observe the tracking information TRIV.
- Trigger the oscilloscope externally on the head pulse HP1.
- Playback the black and white section of the alignment tape.

1. Enter the manual tracking mode (Menu "TAPE" > "TRACKING") and change the tracking value with the ▶ or ◀ keys on the remote control.
2. Watch the tape sync pulse move to the left in relation to the TRIV signal.
3. Note the extreme left hand position reached by the sync pulse. Repeat as necessary.
4. Stop the movement of the pulse when the TRIV signal reduces from 1/2 to 2/3 of its maximum amplitude. A noisy picture (disturbance) is visible on the TV set and the CTL pulse should be to the left of the display.
This position will be stored unless the tape is ejected or the tracking is manually modified.
This condition works only if X-distance is correctly adjusted (see chapter 4.2.3).

Adjustment:
Adjust the left and right roller units to obtain the tracking signal TRIV as straight and flat as possible. (Fig. M17)

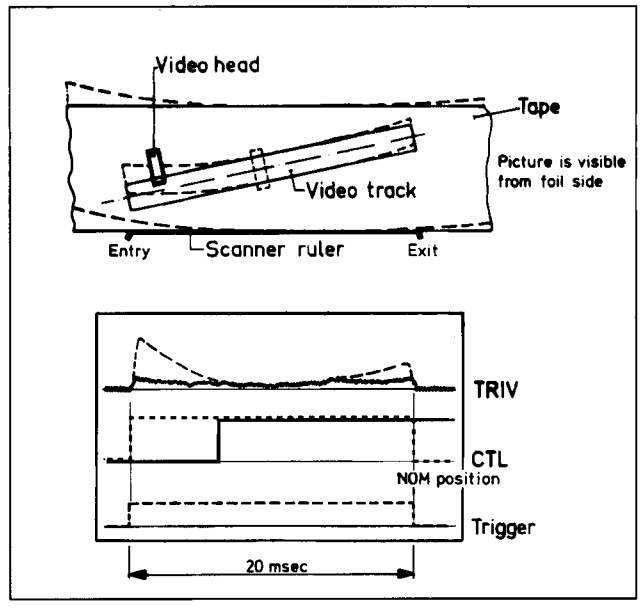

Fig. M17

When looking at the envelope output, the following possibilities are given (test point: pin 9 connector 1902):

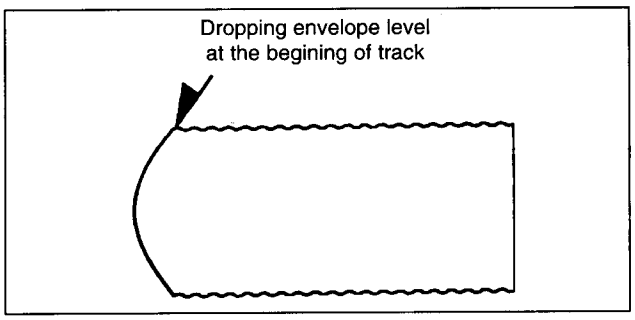

Dropping envelope level at the beginning of track (test point: pin 9 connector 1902).

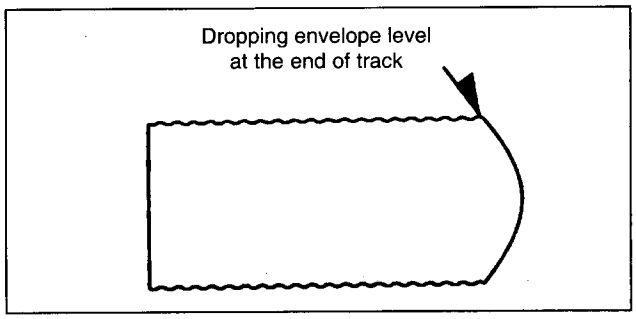

Dropping envelope level at the end of track (test point: pin 9 connector 1902).

When left and right roller units are adjusted properly, there is no envelope drop at the beginning or end of the tracks as shown in the above illustration.

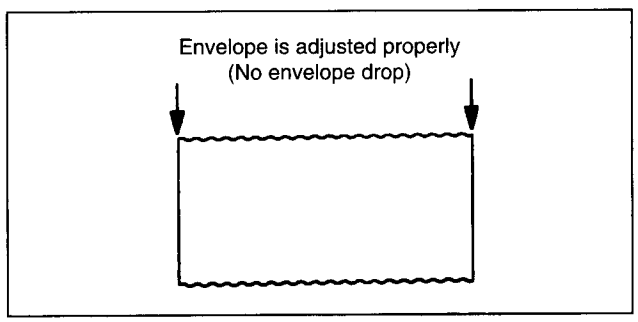

The tape path is properly adjusted.

6. Friction clutch control in playback

- Set the drive to "PLAY" mode.
- Place the torque meter on the right reel.
- Turn the capstan motor to move the right reel clockwise.
- Keep turning until the indication at the torque meter no longer changes (see fig. M18)
- The torque has to be 10.5 mNm ± 25% (105 gFcm ± 25%).

7. Reverse brake control

- Set the drive in the "SEARCH REVERSE" position.
- Place a torque meter on the right reel and turn the reel anti-clockwise, until the reel just starts to flip.
- The value indicated at the torque meter must be 7 mNm ± 3 mNm (70 gFcm ± 30 gFcm).

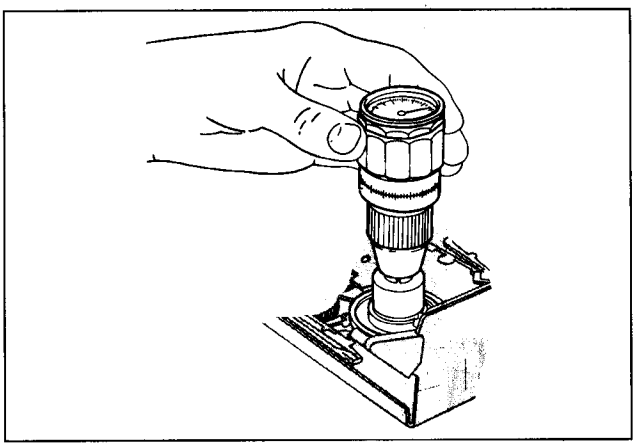

Fig. M18

8. Capstan motor replacement

- Set the drive assembly to the "EJECT" position.
- Remove the capstan belt on the underside.
- Remove the three capstan motor fixing screws (see fig. M19) and withdraw the capstan motor downward from the drive assembly.

Reassemble in reverse order. Make sure that the capstan shaft is free of grease.

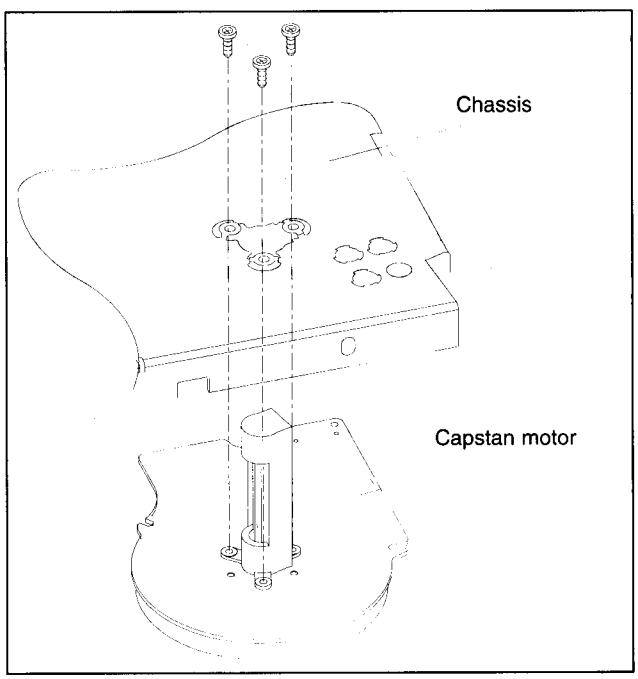

Fig. M19

9. Disassembly/Assembly procedures of mechanism

This procedure starts with the back cover, the small signal board, the shielding plate and cassette-up assembly already removed.
Also, all the following procedures for adjustment and parts replacement should be performed while unit is in the cassette -own position (page 2-12). When reassembling, follow the steps in reverse order.
It is not necessary to remove the cassette-up assembly for all these replacements, only the drawings and photos are done without cassette-up assembly lift and sensor print

				REMOVAL		INSTALLATION
STEP/ LOC. N°.	START N°.	PART		FIGURE N°.	UNHOOK / UNLOCK RELEASE / UNPLUG	ADJUSTMENT CONDITION N°.
1	1	Pressure Roller	T	DM1, DM3		
2	1	Pressure Roller Guide	T	DM 3		
3	1	Cam Shaft	T	DM 3	s1	See § 10, Alignment Procedure, Top View 2 (page 2.18)
4	4	Loading Motor	T	DM 1, DM 4		
5	4	Pulley Shaft Assembly	T	DM 1, DM 5	Loading Motor Holder/ Capstan Motor	See § 8, Replacement of Capstan Motor (page 2.10)
6	6	Reverse Lever	T	DM 1		See § 10, Alignment Procedure, Top View 2 (page 2.18)
7	6	Intermediate Lever	T	DM 1	s2	See § 10, Alignment Procedure, Top View 2 (page 2.18)
8	6	Cam Wheel	T	DM 1	s3	See § 10, Alignment Procedure, Top View 2 (page 2.18)
9	9	A/C Head	T	DM 1, DM 6	* connector, screw, clip (A)	See § 4.2.1 et § 4.2.2 (page 2.8)
10	10	Cleaning Roller	T	DM 1	s4	Small plastic spring of cleaning roller arm must be placed on the left side of the pin from the chassis.
11	11	Roller Unit Right	T	DM 1, DM 7		See § 5.1 (page 2.9)
12	11	Loading Arm Right	T	DM 1, DM 8		See § 5.1 (page 2.9)
13	13	Loading Arm Left	T	DM 1, DM 9	Part of Sensor Print	See § 5.1 (page 2.9)
14	11	Roller Unit Left	T	DM 1, DM 10		See § 10, Alignment Procedure, Top View 2 (page 2.18)
15	11	Loading Gear	T	DM 2		See § 10, Alignment Procedure, Top and Bottom Views (page 2.18)
16	16	Erase Head Assembly	T	DM 1, DM 11		
17	17	Tension Arm	T	DM 1, DM 12	Brake Band Tension Arm Spring	See § 3.2, Tape Tension Adjustment (page 2.7)
18	18	Brake Band	T	DM 12		See § 3.1, Brake Band Adjustment (page 2.7)
19	18/19	Reel Table (S/T)	T	DM 1, DM 12		
20	20	Main Brake (Left / Right)	T	DM 1, DM 12	Brake Spring	
21	18/19	Brake Gear (Left / Right)	T	DM 1, DM 12 DM 13		
22	22	Tension Crank	T	DM 1, DM 16		See § 10, Alignment, Top View 2 (page 2.18)
23	23	Reverse Brake	T	DM 1, DM 17		Place in cam of Slider Gear See § 10, Alignment, Bottom View (page 2.18)
24	6-7,23	Slider Gear	T	DM 1, DM 17		See § 10, Alignment, Bottom View (page 2.18)
25	25	Worm Shaft	T	DM 1	s5, s6	Set Mechanism in "EJECT" Position
26	26	Swivelling plate / Swivelling Gear	T	DM 1	s7	
27	27	Record Protection Lever	T	DM 1	* Spring s8, s9	
28	28	Gear Pulley	B	DM 14	Capstan Belt	
29	29	Clutch Assembly	B	DM 2, DM 16	Gear Pulley	
30	30	Clutch Lever	B	DM 2	Spring, Gear Pulley, s10, s11	
31	30	Changing Gear	B	DM 2		
32	30	Double Gear	B	DM 2, DM 13	Clutch Lever, Changing Gear	
33	30	Main Slider	B	DM 2, DM 16		
34	30	Cam Wheel Lever	B	DM 2, DM 16	Part of Sensor Print	
35	35	Cassette Loader Trigger	B	DM 2, DM 16	Part of Sensor Print	
36	36	Cassette Loader Gears	B	DM 1, DM 2 DM 16	* clip	
37	37	Tension Lever	B	DM 2, DM 16	Part of Sensor Print	
38	37	Cam Wheel Tension	B	DM 2, DM 16		See § 10, Alignment, Bottom View (page 2.18)
39	37	Cam Wheel Reverse	B	DM 2, DM 17		

List of abbreviations: T: Top, B: Bottom, C: clip, S: Snap hook.

Top view

Shown in the EJECT position

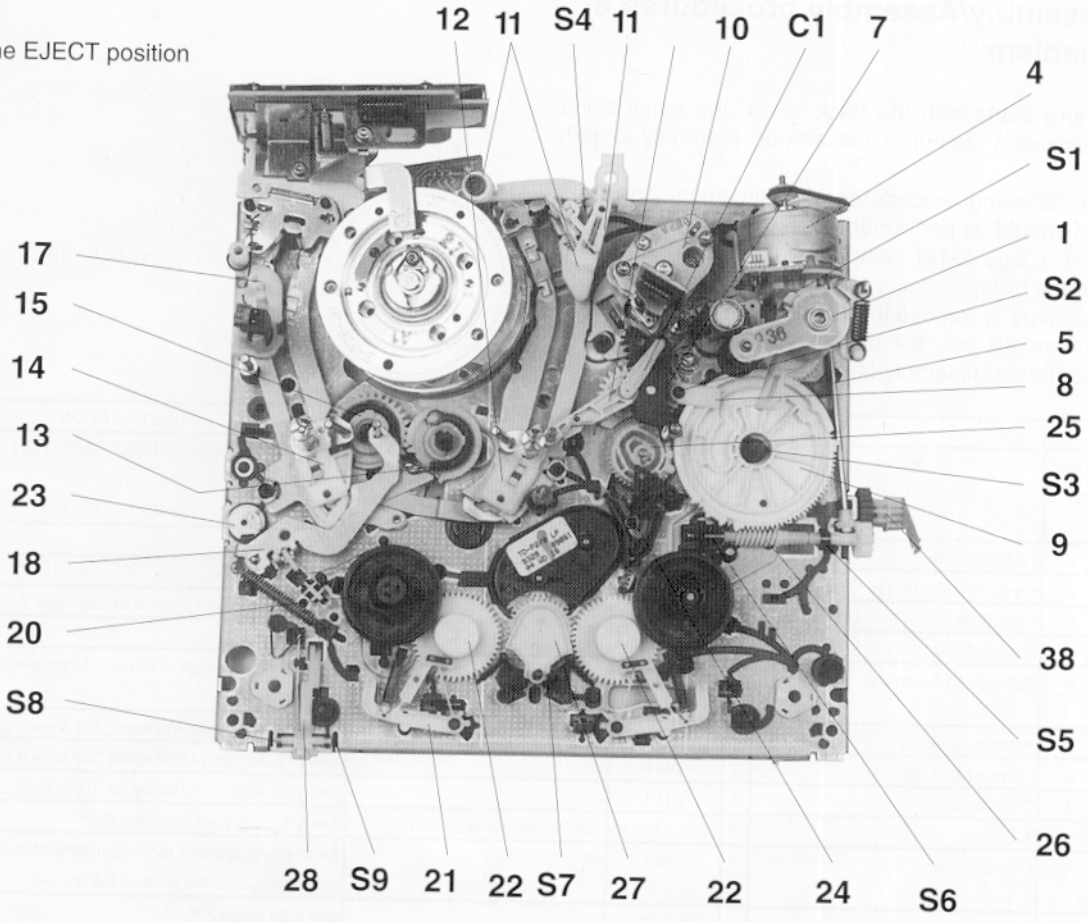

Fig. DM 1

Bottom view

Gear pulley already removed

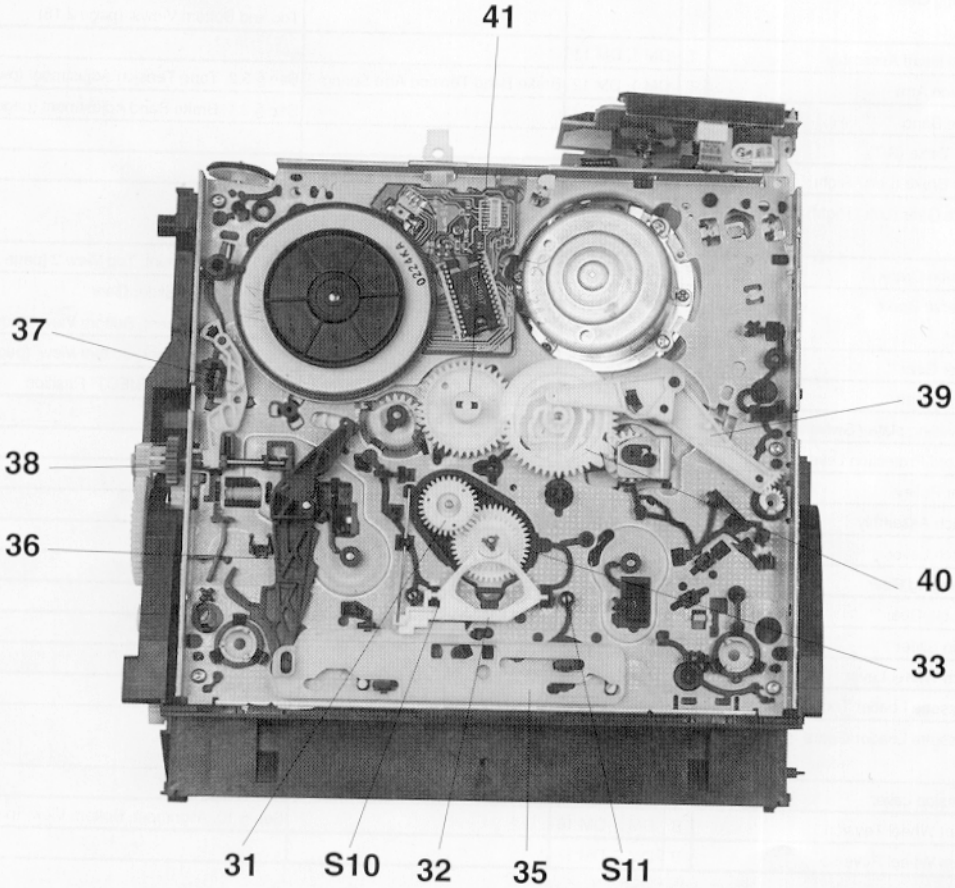

Fig. DM 2

Pressure roller

- Set the drive assembly to "EJECT" position.
- Unhook and remove the pressure roller tension spring (a).
- Release the pressure roller guide from the guide in the loading motor holder by pressing the top of the motor guide rearwards (b) and rotating the pressure roller guide assembly clockwise by approximately a quarter of turn (c).

The pressure roller and guide can now be lifted clear (see fig. DM 3).

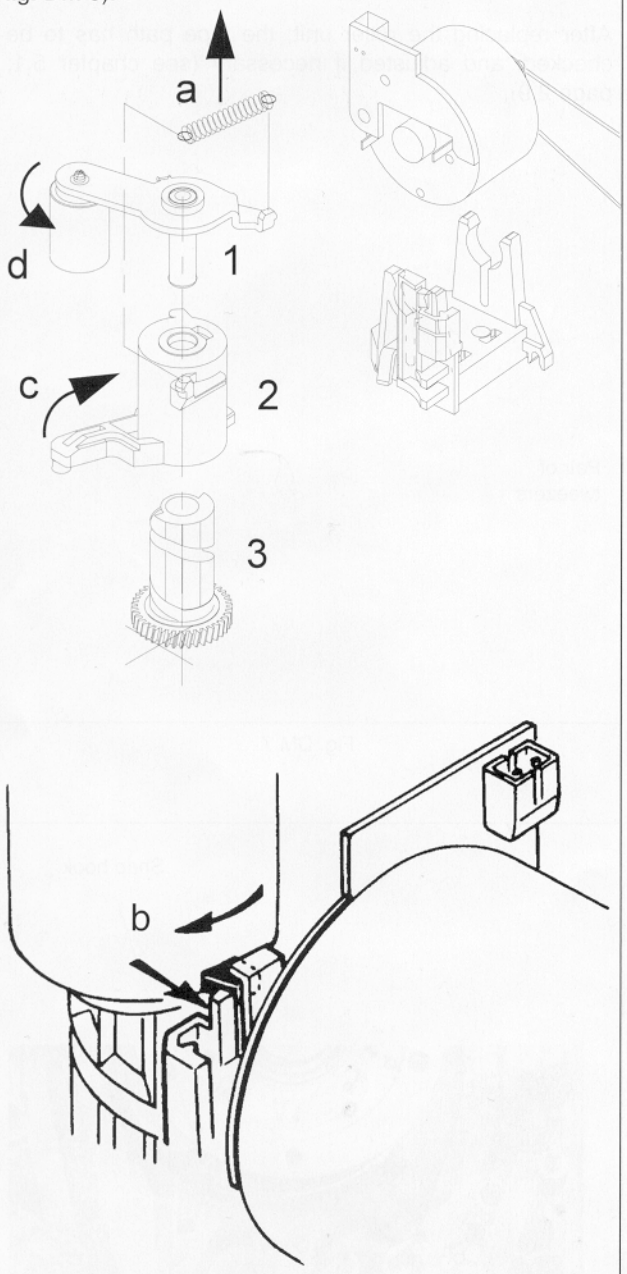

Fig. DM 3

Loading motor

- Remove the belt and disconnect the connector plug.
- Remove the loading motor from its supports.

Note:
When reassembling, ensure that the loading motor is correctly located in the front and rear supports.

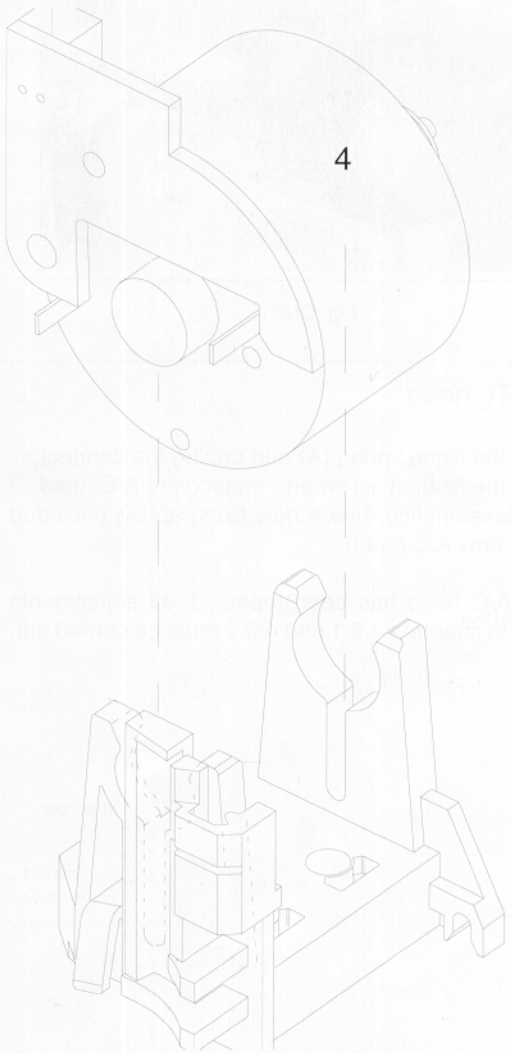

Fig. DM 4

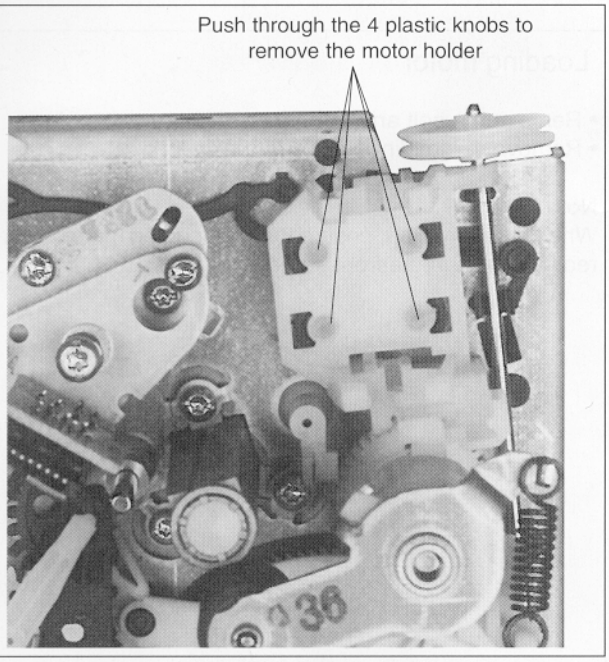

Fig. DM5

Audio/CTL head

- Remove the fixing spring (A) and unplug the connector.
- Remove the fixation screw and replace the A/C head.
- When reassembling, use a new fixing spring (included with every new A/C head).

After the A/C head has been replaced, all adjustments described in chapters 4.2.1 and 4.2.2 must be carried out.

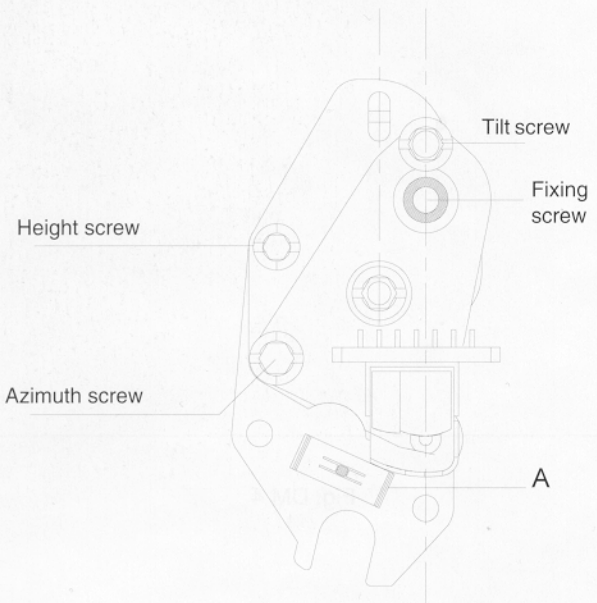

Fig. DM 6

Right roller unit

- Set the unit to the "EJECT" position.
- Compress the two snap hooks with a pair of tweezers and remove the roller assembly from the roller unit (see fig. DM 7).
- Unhinge the right loading arm from the holding plate and push the latter towards the front of the deck to remove from the guide.

Note: During reassembling, ensure that the link from the roller is engaged in the hole of the holder plate.

After replacing the roller unit, the tape path has to be checked, and adjusted if necessary (see chapter 5.1; page 2.9).

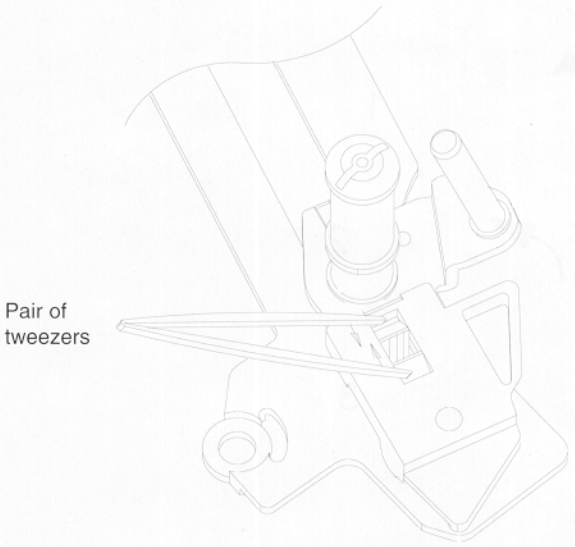

Fig. DM 7

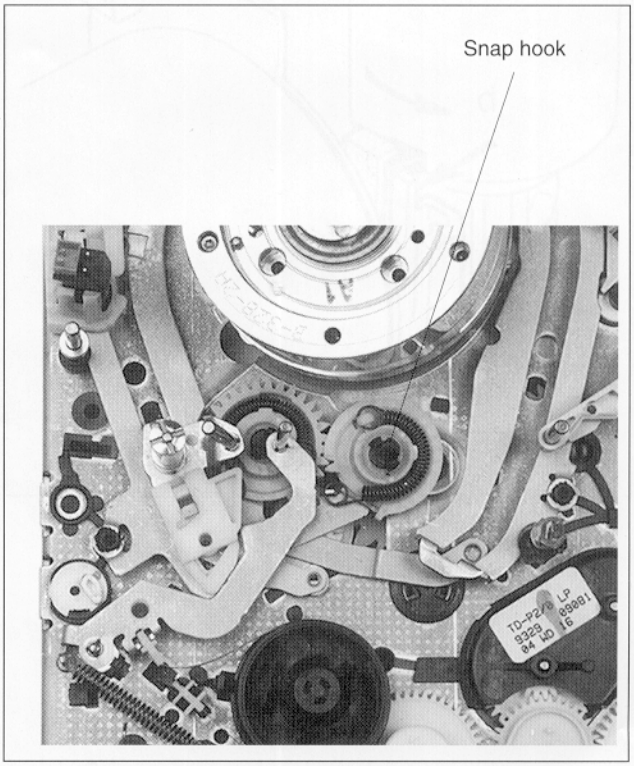

Fig. DM 8

Left roller unit

- Set the unit to the "EJECT" mode.
- Unhook the tension arm spring to avoid the tension arm from being pre-loaded.
- At the bottom side of the drive assembly, partially unhinge the sensor print and remove the tension lever.
- Compress the two snap hooks with a pair of tweezers (fig. DM 9) and remove the roller assembly (A) from the plate (B).
- Unhinge the left loading arm from the holding plate and remove it downward from the drive assembly through the recess in the chassis.
- Reassemble in reverse order.

Note: When reassembling
1. Place the carriage holding plate in the assembly with the semi-circular cutout near the rear of the deck.
2. When the holding arm is refitted, ensure the pin on the underside of the roller assembly protrudes through the link of the holding plate.

After replacing the roller unit, the tape path must be checked, and adjusted if necessary (see chapter 5.1; page 2.9).

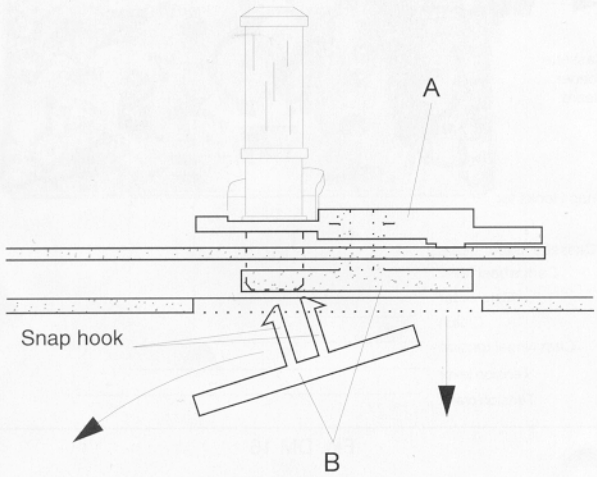

Fig. DM 9

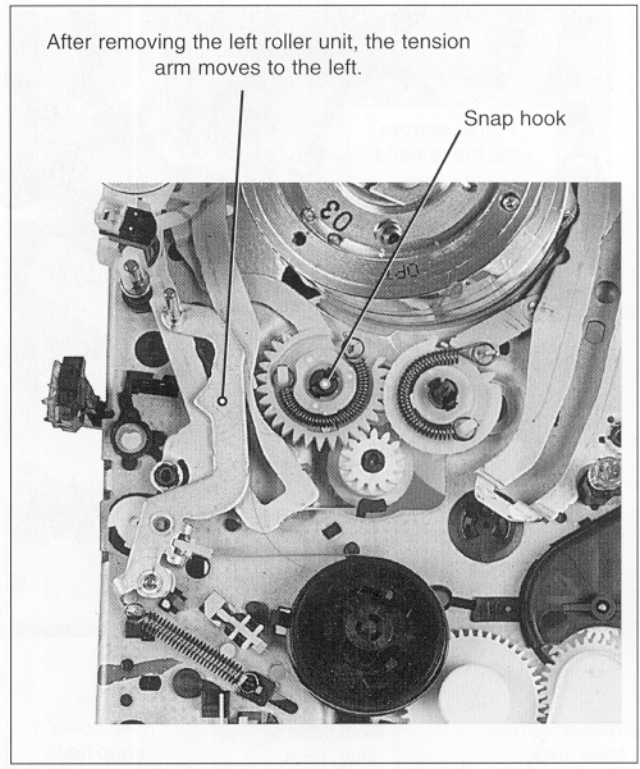

Fig. DM 10

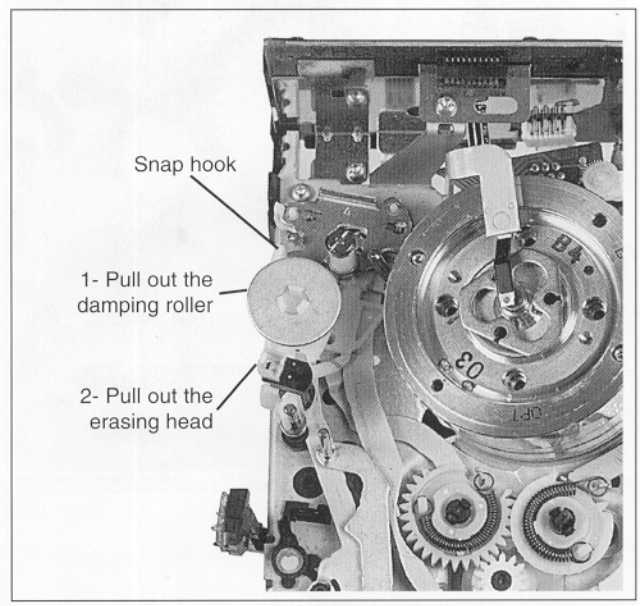

Fig. DM 11

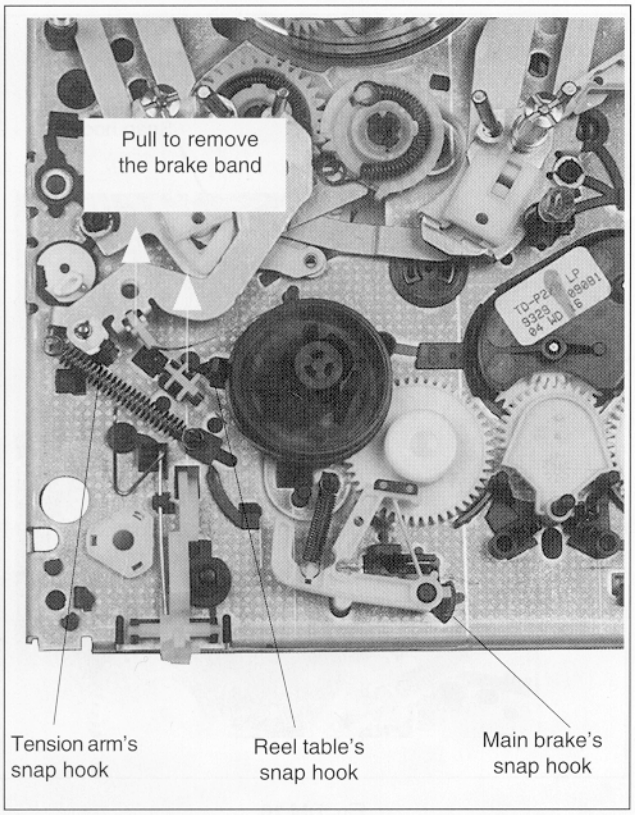

Fig. DM 12

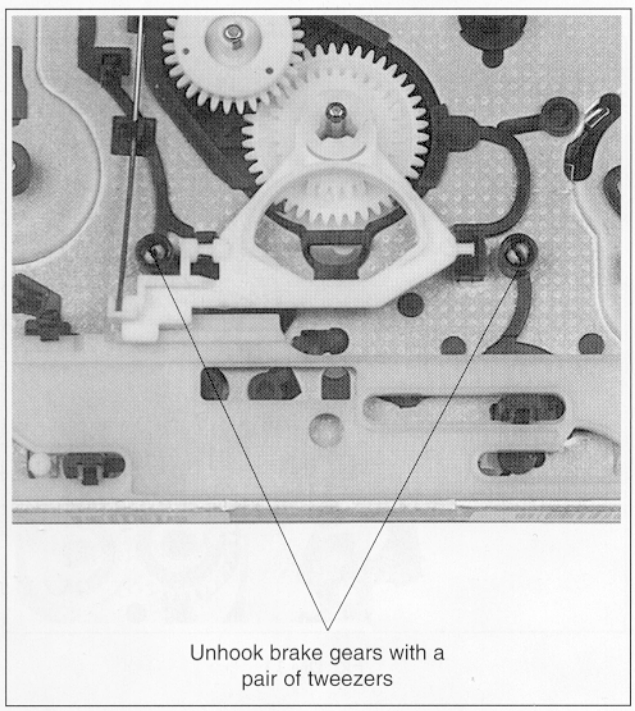

Fig. DM 13

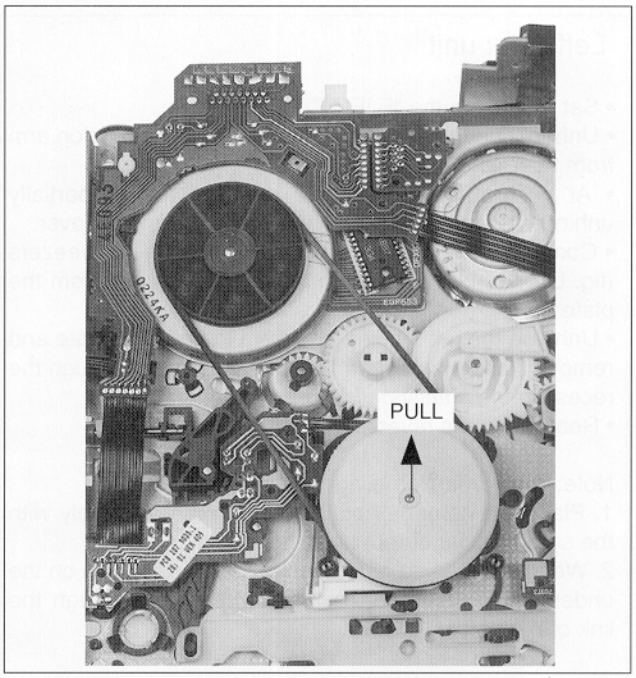

Fig. DM 14

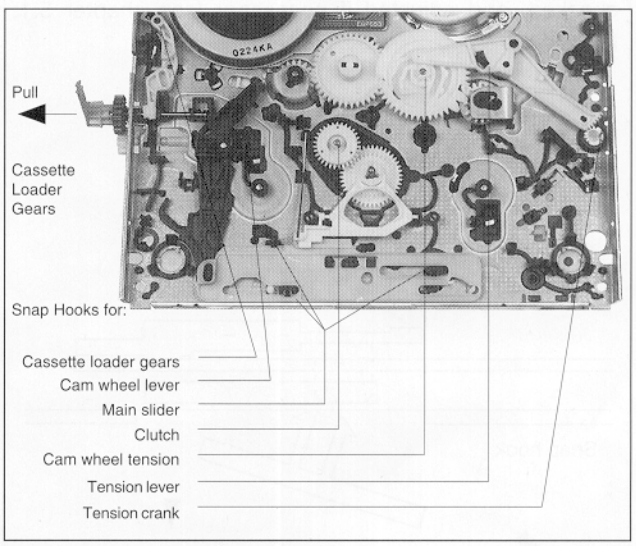

Fig. DM 16

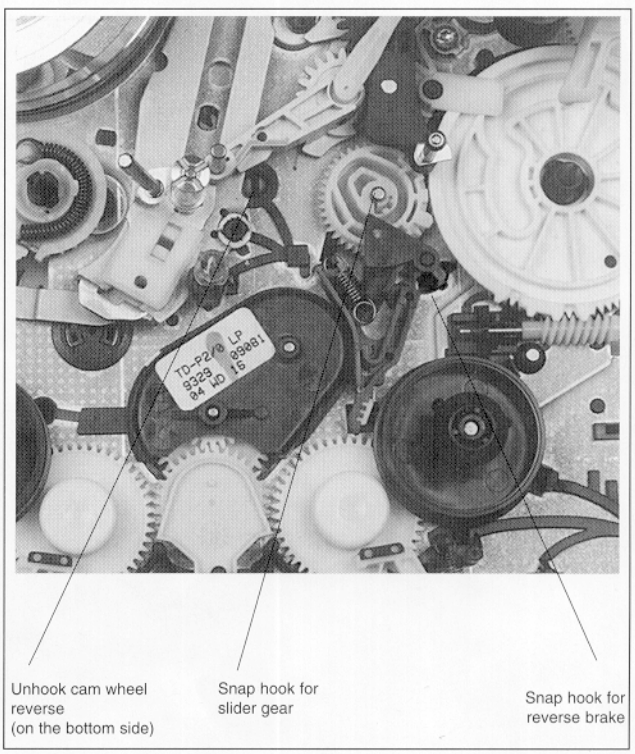

Fig. DM 17

10. Mechanical alignment procedures

The deck must be in "CASSETTE DOWN" position.
The following diagrams indicate the relative position of the gear wheels and levers when the deck is in the "CASSETTE DOWN" position.

Top view 1

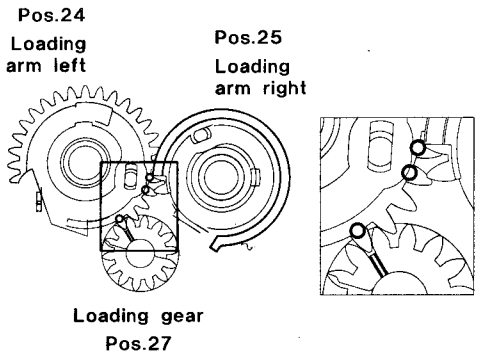

Top view 2

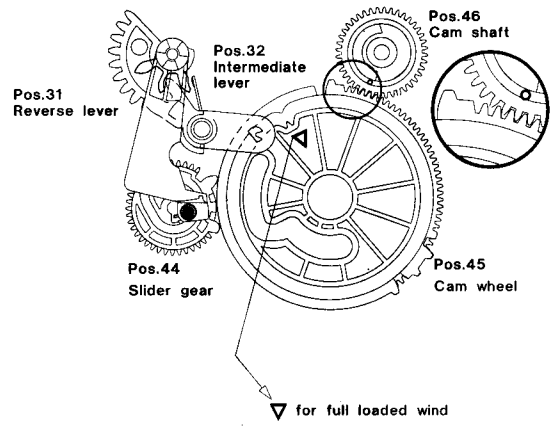

Bottom view

Underside view

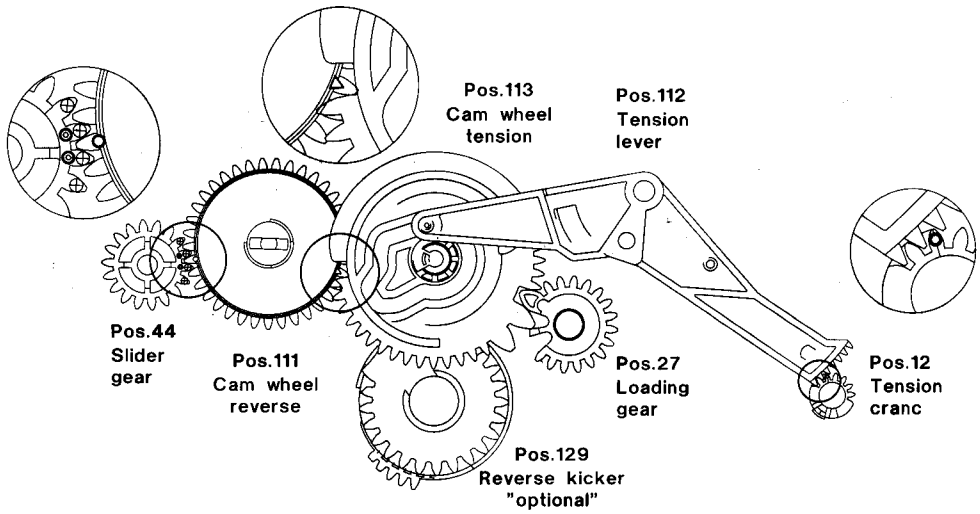

D. CIRCUIT DESCRIPTION

1. Large signal part

1.1 Switched-mode power supply (PS) - TVBAD (TV board)

Typical specification:

Mains voltage:	196 - 265 Vrms
Maximum output:	120 W (mono)
	250 W (stereo)
Operating frequency:	75 kHz
Efficiency:	70% at maximum output.
	All outputs are short-circuit proof.

1.1.1 Functional principle (blocking oscillator principle)

During the conductive phase of the switching transistor, supply energy is transferred into the transformer. This energy is passed to the load in the blocking phase. Using the switch-on time, the energy transferred in each cycle is regulated in such a way that the output voltages are unaffected by changes in the load or supply voltages. The integrated circuit MC44608 (7310) controls the power MOS-FETs (7300).

Description of different load operations

a) No-load

With the wiring harness unplugged, the device runs in hick-up mode. When a voltage of +5V is connected to pin 5 on plug 1962 (signal ISTBY), the unit will go to continuous mode. The minimum load required by a power supply for stable oscillation is then drawn from the TVBAD itself (P_{in} approx. 15 W).

b) Control range

There are two operating conditions in the control range: Hick-up mode (low-power standby) and normal operation mode (Timer Record, TV mode).
In hick-up mode (P_{in} < 4 W), the power supply operates in intermittent mode. During the active phase, the capacitor for the 5V supply (2351) is loaded from the power supply and discharged via the load during the passive phase. In this operating condition, all output voltages up to 5STBY are reduced to 1/10 of the nominal value or switched off completely. This is controlled using the input voltage in the 5V controller.
In fixed frequency mode (P_{in} > 15W) the power supply oscillates at a constant frequency of 75kHz. The load is controlled using the switch-on time (switch-on time = 1/frequency x duty cycle). The output voltage is only slightly load-dependent.

c) Reversal point

Maximum output is transferred at this point of the output characteristic.

d) Overload

The power supply operates in "BURST-MODE". The energy is limited in each cycle, so that the output voltage decreases.

1.1.3 Circuit description

Interference generated in the power supply is kept out of the mains by a filter around coil 5301 (with 25" stereo units, this filter is located on the MFSWD sub-printed board). The supply voltage is rectified by bridge rectifiers 6301, 6302, 6303 and 6304 and filtered by electrolytic capacitor 2311. During the start-up phase and in "hick-up mode"), capacitor 2323 is loaded from the MC44608 control IC (7310) with a current source via pin 8 and pin 6. When the voltage reaches 14V at pin 6 of the IC 7310, the IC starts by setting the internal voltage and current references and the oscillator begins to oscillate. After the start-up phase and in continuous mode, the current source is switched off and the supply is transferred by transformer coil 8-9 and components 3322 and 6322.
The power transistor 7300 is the switching transistor for the power supply. Whilst the switching transistor is switched on, current flows from the rectified supply voltage through the primary coil of the transformer, the transistor and the shunts 3327 and 3328 to earth. As the positive voltage at pins 2 and 3 of the transformer is constant (for our purposes), the current rises linearly and forms a ramp, depending on the supply voltage and the inductivity of the primary coil. A magnetic field, representing a certain energy, forms inside the transformer. The secondary voltages are polarized in such a way that the diodes are non-conductive. The value of resistors 3327 and 3328 is used to determine the maximum transferable power. The switch-on time for the MOS-FET 7300 is determined using the current which is supplied to the control input on the MC44608 (pin 3). The output pin 5 on IC 7310 is a push-pull stage. The switch-on and switch-off currents for the MOSFET are limited by resistors 3319 and 3320.

Once the switching transistor has switched off, no more energy is transferred into the transformer. The inductivity of the transformer now attempts to maintain the current which flowed through it at a constant level (u=L*di/dt). The current, however, decreases, di/dt becomes negative, and the polarities of the voltages at the transformer reverse, causing a current to flow through the secondary coil of the transformer, the diodes, the electrolytic capacitors and the load. This current is also ramp-shaped (but reducing). The switched-mode power supply is controlled by changing the conductive phase of the switching transistor so that either more or less energy is transferred from the supply to the transformer. For the control function in normal operation mode, the output voltage Ubat is connected via the voltage dividers 3344, 3348, 3347 and 3346 to the TL431 controller (7341) which compares the voltage with an internal reference voltage of 2.5 V. The control range for the TL431 is set using resistors 3341 and 3342. Its output current (=manipulated variable) is disconnected from the supply by the optocoupler 7340, fed to pin 3 on the MC44608 (7310) and the switch-on time for switching transistor 7300 is changed accordingly. To stabilize operation in timer-rec mode, part of the 14A voltage is also used for the control function via resistor 3346. Voltage peaks occur on the transistor at the switch-off time due to the leakage inductance in the transformer. These are limited by components 2313-3311 and 6314-2309 (peak clamp network). After plugging in the power supply, capacitor 2323 is loaded via an internal current pump on the MC44608. In low power standby-mode (ISTBY = low) thyristor 6358 is enabled by transistor 7358 and connects transformer coils 16 - 15 to capacitor 2351.As this coil supplies a voltage of 100V in fixed frequency mode, which is limited to 12 V in Stdby mode by Zener diode 6341, all other voltages are also reduced by around 1/10 and therefore virtually switched off. As this also reduces the auxiliary supply voltage on the IC 7310, the MC44609 switches over to hick-up mode internally. This means that capacitor 2351 is loaded with current pulses during the switching phase via the thyristor 6358 until the current reaches a specific value in pin 3 on the control IC. It then blocks and capacitor 2351 is discharged via the load (approx. 60 mA) until control IC 7310 becomes active once more. During hick-up mode the MC44608 is supplied via pin 8 directly from the primary direct voltage on 2311. In hick-up mode the MC44608 runs through three statuses which relate to the supply voltage on pin 5 (figure 1).

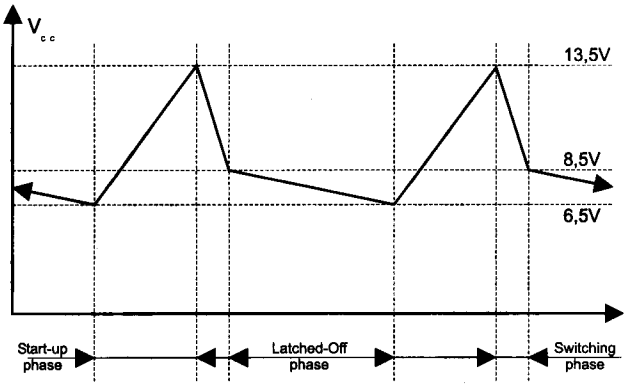

Figure 1

Switching phase: 7310 is fully active and capacitor 2351 is loaded. To prevent noise interference, the maximum current in the transformer is reduced by resistor 3330. As the amount of current consumed by the MC44608 is high in this state, the voltage on 2323 quickly sinks until it reaches 8.5 V.
Latched-off phase: 7310 no longer issues pulses to switching transistor 7300. The amount of current consumed by the control IC and therefore also the reduction in supply voltage on pin 5 can be set using resistor 3336. The repetition rate is then specified in hick-up mode. If the voltage on 2323 exceeds 6.5 V, the IC switches off completely.
Start-up phase: 7310 is switched off completely. The amount of current it consumes is so low that it can charge capacitor 2323 via an internal current source. The voltage on 2323 increases until the MC44608 starts with the switching phase once more at 13.5 V.

On the secondary side, six voltages are available, which are rectified by 6340, 6342, 6350, 6370, 6380, 6390 and filtered by 2340, 2351, 2360, 2353, 2370, 2380 and 5370, 5360.
The voltages 5STDBY, 5AD and 3V3 are additionally stabilized using voltage regulators 7381, 7382, 6387, 6383, 6384, 6385, 3383, 3384, 3385, 3386, 3388 and 7391, 7392, 7393, 6392, 3393, 3397, 3395, 3396 and 7370, 7371, 6373, 6372, 6374, 3370, 3371, 3372, 3373, 3375. Whilst the device is in low power stand-by mode, the 5AD voltage is switched off via the regulator.
The 33A voltage is also stabilized by Zener diode 6355 and transistor 7355.
Overvoltage
MC44608 7310 has overvoltage protection. When the voltage at pin 1 exceeds 15.4 V, the output stage blocks.
Overtemperature
MC44608 7310 also has an overtemperature sensor, which blocks the logic in case of excessive chip temperature. A renewed start-up is possible once the temperature has dropped. To reactivate the power supply, unplug the supply and then plug in again.

1.2 Large signal processing (TV,LS,PT) - TVBAD

The following functional units form part of the "large signal" functional group:

- TV-IC (IC7205) controlled using I²C bus
- Horizontal deflection stage
- East-West image geometry correction stage
- Vertical deflection stage
- RGB stage
- Beam current feedback stage
- Picture tubes
- Circuit breaker

1.2.1 TV-IC TDA884x (IC7205) controlled using I²C bus

The TV-ICs used are from the TDA 884x family which can process various television standards depending on the device type. These ICs are sub-divided into ICs with and without East-West image geometry processors.

The following functional blocks are used for large signal processing:

- Sync pulse separation from the video signal selected
- Horizontal synchronization via two PLL control loops
  a) φ1 control loop to achieve frequency synchronization with the video signal. The control voltage produced is filtered on pin 43.
  b) φ2 control loop to adjust the phase angle of the screen content relative to the grid on the screen. The control information is output on pin 40 (H drive). The feedback signal (HFB) is input on pin 42.
- Horizontal soft-start and soft-stop function
- Soft start: For the first 100ms, the horizontal oscillator functions at 32kHz and then switches over to 16kHz. The soft start reduces the switch-on current peaks when starting up the horizontal deflection stage.
  Soft stop: The horizontal oscillator switches from 16kHz to 32kHz line frequency. In addition, the RGB outputs on pins 19, 20 and 21 are notched up to achieve a partial discharge of the picture tube. The soft stop period is dependent on the beam current and can last up to 100ms. The high voltage in the picture tube is therefore reduced to below 10kV and thus effectively suppressing the cold-cathode emissions (persistence after the picture tube has been switched off)
- Vertical divider: Synchronizes itself according to the vertical sync pulses and determines the scan time and the ramp-down time for the vertical ramp.
- Vertical saw-tooth voltage generator: Supplies symmetrical saw-tooth currents to pins 46 and 47. The steepness and the curved s-shape of these currents can be changed to a limited extent using the I²C bus.
- Beam current limiting stage: Evaluates the voltage available at pin 22 thus engaging and reducing the amplification in the brightness and contrast amplification which reduces the output voltages for the RGB stage on pins 19, 20 and 21.
  Voltage on pin 22 >= 3.5V: Not involved in the brightness and contrast amplification stage.
  Voltage on pin 22 between 2.5 and 3.5V: Contrast is reduced.
  Voltage on pin 22 between 1.5 and 2.5V: Brightness and contrast are reduced.
  During the vertical frame flyback time (approx. 0.8ms) the voltage on 22 needs to be < 3.65V, whereas the vertical scan time (approx. 19.2ms) < 3.65V. If these voltage values do not apply, this status is evaluated as an error in the vertical stage and the RGB output voltages on pins 19, 20 and 21 become as small as possible (RGB is blanked). This information is forwarded to the main controller (IC7900) via the I²C bus, and the controller then switches off the horizontal driver stage in the TV-IC via soft-stop. This state protects the screen against excessive local heating if the vertical stage is defective (screen burn protection).
- Circuit-breaker evaluation and high voltage compensation stage: Evaluates the voltage level on pin 50. Voltages > 3.9V indicate a fault in the large signal range. If this level is exceeded, the horizontal output stage is stopped immediately, preventing reloading of the screen. Voltages between 1.5 and 2.5V on pin 50 engage and correct the vertical ramp. (Changes the vertical amplitude or with the TV-IC with East-West correction stage, the horizontal width by a maximum of ±5%).
- East-West image geometry processor: Derives from the vertical ramp a parabolic voltage which issues a control current on pin 45 for the subsequent East-West correction stage. The geometry processor can be operated in the service menu via the I²C bus and the parabolic voltage can be changed for the following image geometry corrections: East-West range, parabolic range, corner, parabolic and trapezoidal correction.

- RGB functional unit with automatic black level and colour temperature stabilization:
  The black level and colour temperature stabilization corrects changes in the picture tube relating to high voltages and ageing. The video signal present on pin 10, 13, 17 or 22 is separated into the Y and chroma parts in the TV-IC, runs through various functional blocks depending on the TV standard, and can then be changed using the I^2C bus in terms of brightness, contrast, definition and colour temperature. It is set automatically in 4 measurement lines, which are present following the V pulse, for each picture tube in succession.

1.2.2 Horizontal deflection stage

T7219, T7501 and transistor 5500 or 5501 are used as the driver stage for line transistor T7520 or T7521. During the conductive phase, the primary current for the line transformer L5519 or L5520 and the horizontal deflection current flow via T7520 or T7521. During the block phase, the energy stored in the line transformer is used to generate the high voltage and for the horizontal line flyback. In the subsequent scan phase, the horizontal deflection current changes polarity and is clamped to earth via the diodes D6520(14"), D6521(20", 21") and D6521 and D6522 (25"). The feedback voltage on the line transistor is supplied to the TV-IC on pin 41 via an RCD network. The TV-IC then uses this information for RGB blanking during the line flyback and as control information for the φ2 control loop.

1.2.3 East-West image geometry correction stage (only for 25" units)

The TV-IC 7205 passes a parabolic-shaped control current from pin 45 to the current sink located in the vertical IC TDA8350 (IC7556). This sink current is drawn from the diode modulator (comprising D6521, D6520, C2520, C2522, C2526, the bridge transformer L5525 and decoupling coil L5526) which in turn draws its current from the horizontal deflection unit. It is possible to control the image width by changing the deflection current flowing through the horizontal deflection unit.

1.2.4 Vertical deflection stage

TDA8356 (IC7555) for 14", 20", 21" and TDA8350 (IC7556) are ICs coupled to direct current with integrated bridge output stage and integrated non-return switch. It is controlled from the TV-IC via pins 46 and 47. The status of the V-IC is conveyed to the TV-IC via an RD network (R3567, R3568, R3569 and D6568).

1.2.5 RGB stage

The RGB signals are sent to the picture tube printed board from the TV-IC (IC7205), their voltage is amplified at the board using T7180, 7181 and 7182, the current is buffered once again via the subsequent push-pull stages and supplied to the picture tube cathodes via resistors R3177, 3179 and 3181. After each vertical frame flyback, T7185, 7186 and 7187 supply measurement signals for automatic cathode calibration to pin 18 on the TV-IC.

1.2.6 Beam current feedback control stage

The voltage on root capacitor C2535 is a precise reflection of the total of cathode currents flowing. This information is conveyed TV-IC (pin 22) to the TV-IC (pin 22) which controls the brightness reduction stages internal to the TV-IC according to the voltage values.

1.2.7 Picture tubes

The 14" (A34...), 20" (A48...) and 21" (A51...) picture tubes are tubes with a 90° deflection angle and do not require grid corrections, i.e. no image geometry correction stages are necessary. The 25" picture tube (A59....) is a tube with a 110° deflection angle and requires a horizontal pin-cushion equalization stage.

1.2.8 Circuit breaker

T7543, T7547 and T7510: The circuit-breaker input is located on the TV-IC on pin 50. This is evaluated approx. 500ms after switching on the device. In normal operation, approx. 2V is available on pin 50. In case of error, a high level of at least 100ms duration is required. The voltage value must be > 3.9V. The stage with T7510 responds when the line transformer primary current is too great, the stage with T7543 responds when there is a risk of excess high voltage, and the stage at T7547 responds when the beam current is too high.

2. Small signal part

2.1 Control part (AIO1,AIO2,CVB) - RUBAD

Block diagram for sequence control system (central control):

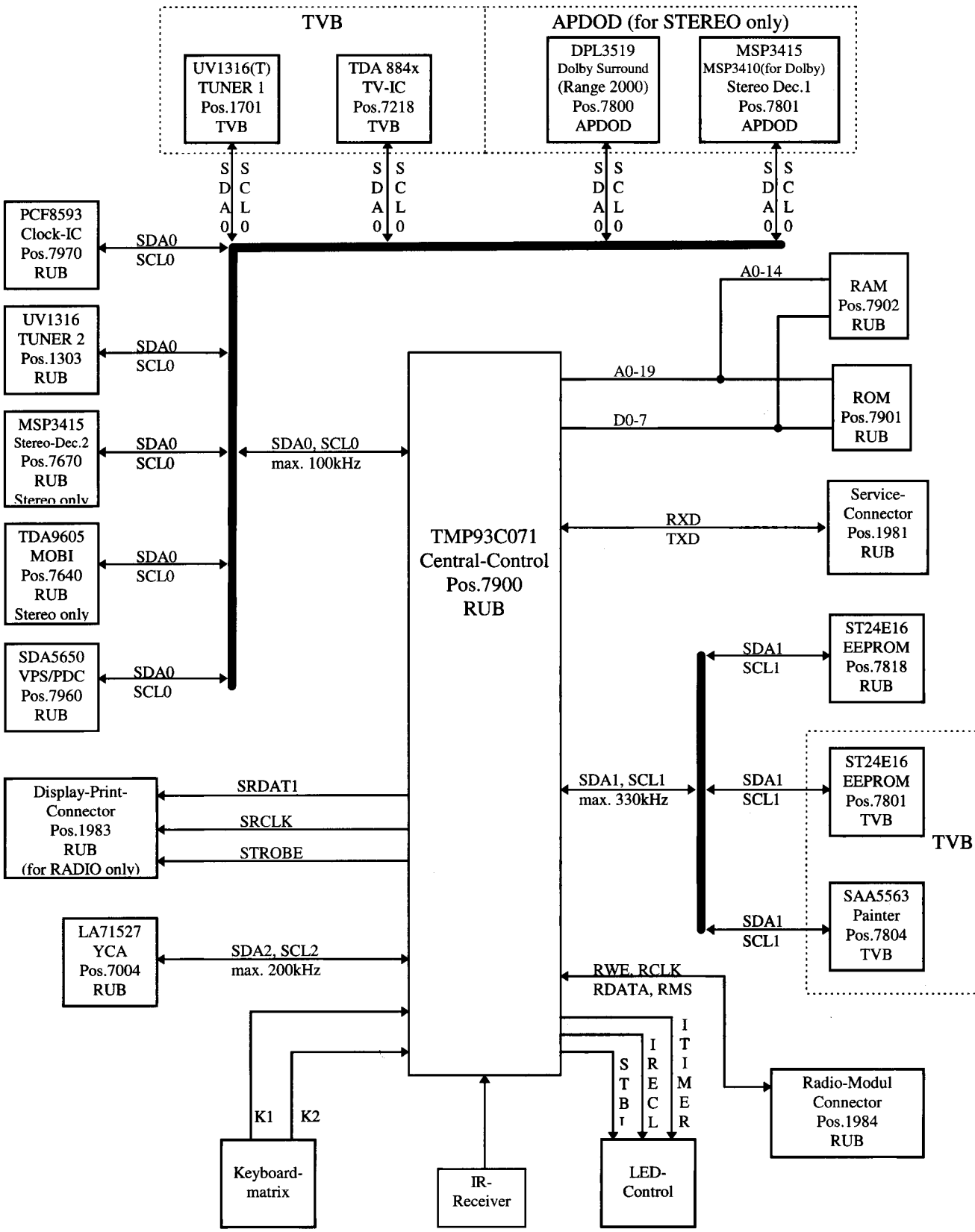

2.1.1 Overview of functions:

The control of the entire TVCR combined unit primarily determines the "all in one" (AIO) central controller TMP93C071 (IC7900), which monitors peripheral functional groups using I²C bus (SDA, SCL). Communication with the TXT,OSD-IC (Painter) SAA5563 (IC7804) on the TVBAD is conveyed via lines SDA1 and SCL1.
The sequence control system can be divided into the following functional groups:

- Main computer (central controller) with external memory and parallel RAM
- Bus systems
- Shift register
- EEPROM
- Reset generation
- Keypad evaluation
- LED control
- IR receiver
- Clock IC
- Loading motor detection

2.1.2 Main computer

The micro controller (µC/AIO) TMP93C071 IC7900 carries out the main control functions on the device. As the µC has no internal memory, an external EPROM or flash-ROM (IC7901) with a memory size of 512 Mbytes is required. As the µC's internal RAM is not sufficient at 8kBytes, an external static RAM (IC7902) is used. The memory size is 256 kBits .

- External ROM sector of 16Mbytes addressable
- 8 Kbytes internal RAM
- 8-bit A/D converter (16 channels)
- Serial bus interface: 2 serial, 2 I²C bus, 1 UART (RXD/TXD)
- PWM outputs: -3 x 14bit, 9 x 8bit
- Composite sync input
- Special servo inputs

The component is used in QFP (120 pins).
There are 16 analog inputs available. The resolution of the A/D converter is 8 bits. The maximum input voltage range which can be processed is 0 ... 5V (determined by the reference voltages ADREF pin12 and ADGND pin13).
12 analog/PWM outputs - 3 with 14-bits and 9 with 8 bit resolution, are available. The outputs supply a signal with a constant frequency (approx. 39kHz) and a variable duty cycle.

External RAM CY62256D (7902)

An external RAM of 256kBits (32k x 8bits) in size is used.

External flash ROM M29F040-90P1 (7901)

The external flash ROM has a memory capacity of 4Mbits (512k x 8bits). It contains both the controller software for the entire sequence control system for the device, and what is known as the "boot software". This can be used to overwrite the controller software using an RS232 interface for a new version. For this purpose there is a service connector (pos. 1981) on the underside of the device, which can be used to connect the TVCR to a PC via an interface. Each time the network is reset, the boot software is active for 50ms and attempts to create a connection to the PC before the device is restarted.
See the Settings chapter for more details on the software update.

2.1.3 Bus systems

a) I²C bus for peripheral functional groups

SDA0, SCL0:
This bus is operated at a pulse frequency of approx. 100kHz. The following modules are connected:

- CLOCK-IC (IC7970) PCF8593P (RUBAD)
- VPS/PDC-IC (IC7960) SDA5650 (RUBAD)
- TUNER 1(1701) UV1316 (TVBAD)
- TUNER 2(1301) UV1316 (RUBAD)
- MOBI (IC7640) TDA9605H only for stereo (RUBAD)
- MSP (IC7670) MSP3415D only for stereo (RUBAD)
- TV-IC (IC7205) TDA 8840/8842 (TVBAD)
- MSP (IC7801) MSP3410/3415 (APDOD)
- DOLBY-IC (IC7800) DPL3518/3519 (APDOD)

SDA1, SCL1:
This bus is operated at a pulse frequency of approx. 330kHz. The following modules are connected:

- EEPROM (IC7818) ST24E16(RUBAD)
- EEPROM (IC7801) ST24E16 (TVBAD)
- TXT, OSD (PAINTER) (IC7804) SAA5563 (TVBAD)

SDA2, SCL2:
This bus is operated with an individual pulse frequency (synchronized using HP1) so that no interference is generated in the image. The following module is connected to this bus: YCA (IC7004) LA71527M

b) Serial bus to the service plug

Service information can be called up on plug 1981 via RXD and TXD. (e.g. re-programming flash ROM and RS232 interface)

c) Optional for devices with radio display: Serial bus for the shift registers

Via the SRDAT and SRCLK lines, data is loaded into the shift register with a serial input and parallel outputs and switched onto the shift register outputs by the transfer pulses coming from the STROBE line (see description of KB1D).

d) Optional for devices with radio: Serial bus

RCLK_MNT2, RDATA_PSS2: Interface to the radio module

2.1.5 EEPROM

The IC7818 (16Kbit) on the RUBAD stores timer data, channel information, device settings, SHOW VIEW data and data for the child-lock, for example, using the I²C bus.

In the IC7801 (1Kbit) on the TVBAD, setting values are stored using the I²C bus required for the production of the TVBAD board.

2.1.6 RESET generation

For generating the reset, a discrete switch is used where the reset length and the rising edge can be adjusted using two capacitors.

2.1.7 Keypad evaluation

Using a resistance network a voltage divider is generated depending on the key pressed via resistors pos. 3945 and 3946. This voltage divider generates a specific direct voltage value on line K1 or K2 which is detected using the analog inputs AIN7/pin 18 (K1) and AIN9/pin20 (K2) on the µC 7900.
Alternatively, the keys can also be located on a separate printed board (KB1D or KB2D). In this case the lines K1 and K2 are only fed to the KB1D printed board via plug pos.1983 or to the KB1D printed board via plug pos.1982. The direct voltage value is then generated on lines K1 or K2 and evaluated on the keypad printed boards once more using the keypad and resistance, and evaluated on the RUBAD.
Die Tasten können alternativ auch auf einem eigenem Print (KB1D oder KB2D) sitzen. In diesem Fall werden die Leitungen K1 und K2 lediglich über den Stecker Pos.1983 zum KB1D-Print oder über den Stecker Pos.1982 zum KB2D-Print geführt. Auf den Tastenprints wird dann wieder über Taste und Widerstand der Gleichspannungswert auf den Leitungen K1 oder K2 erzeugt und am RUBAD ausgewertet.

2.1.8 LED control

a) STBY-LED

The red STBY-LED can be lit in 2 different brightness levels. In standby mode it is less bright than in the normal operating mode, and it will also flash when remote control signals are being received. It is controlled using the STBL signal (µC 7900 P66/ pin 98).
STBL low = standby mode (LED less bright)
STBL high = normal operation (LED bright)
Alternatively, the STBY-LED may be located on a keypad printed board (KB1D or KB2D).

b) TIMER-LED

The red timer LED is switched using the control line ITIMER and displays whether or not a timer has been programmed. If the ITIMER control line is High, the TIMER LED does not light up; if the ITIMER control line is on Low, the TIMER LED lights up. Alternatively, the timer-LED may be located on a keypad printed board (KB1D or KB2D).

c) RECORD-LED

The RECORD-LED is controlled using the IRECL control line. If control line IRECL is High, the RECORD-LED will not light up; if the control line IRECL is Low, the RECORD-LED will light up. Alternatively, the RECORD-LED may be located on a keypad printed board (KB1D or KB2D).

2.1.9 Display printed board KB1D (only for devices with radio)

2.1.9.1 Display board

Overview of functions:
The 7 segment display is controlled using a serial bus and the supply to the segments is ensured by line DISSUP. The customer can select various brightness levels in the various operating modes.
The sequence control system can be divided into the following functional groups:

- Shift register (IC7111,7121,7131,7141) HEF4794BT
- 7 segment LED display

Shift register
Via lines SRDAT1 and SRCLK (serial bus) the data is loaded into the shift register (pos. 7111, 7121, 7131, 7141) using serial inputs and parallel LED driver outputs. Using the rising clock edge (SRCLK) the data from SRDAT1 is transferred and conveyed using EO (Enable Output) on high, directly to the outputs using the rising strobe edge.

7 segment LED display
The 4-figure LED display LTC-5837BG (pos.7130) can be operated at 4 different brightness levels. The display is supplied with DC via line DISSUP, and a change in voltage on the DISSUP indicates a change in the display brightness. All segments have a common anode which is run to pins 3, 8, 18, 23, 28, 33 and 38. The individual segments are controlled directly using shift register outputs so that a LOW position on the shift register output activates the corresponding display segment.

2.1.9.2 Keypad

see Keypad evaluation

2.1.9.3 LED control

Alarm Radio Sound LED
The Alarm Radio Sound LEDs (pos. 6183, 6184) are controlled by the shift registers in such a way that a LOW position on the shift register output activates the corresponding LED.

Record, Timer, Stby LED
see 2.1.8 LED control

2.1.10 IR receiver

Using the IR receiver (IC7810), the IR commands sent by the REMOTE are received, converted, and fed to the c central controller on pin 29.

2.1.11 CLOCK IC

The CLOCK-IC supplies the time information and continues to be supplied with a back-up voltage even if the device is either unplugged or switched off at the mains plug. This also means that the clock function is maintained if the device is switched off for at least 30min or 4 days (depending on the back-up capacitor 2970 or 2971).

2.1.12 Threading tachometer detection

So that the device can also detect when a cassette is inserted in low-power standby mode, the threading tachometer is detected using a comparator (IC7800-A) and fed to the µC.
This indicator is used to "wake up" the device from low power standby.

2.1.13 Buzzer function

When programming the timer, the signal TWB is set to LOW, which loads an 1000uF electrolytic capacitor. This electrolytic capacitor (pos. 2994) is discharged via a piezo element (buzzer) if the power supply is interrupted or if the mains switch is activated, and this produces a timer warning signal.

2.2 Control section on the TV board (COTV) - TVBAD

Micro-controller (Painter)

The microcontroller IC SAA5563 (pos. 7804) comprises one microprocessor group and a Teletext group. This IC is used to realize a port expander as well as Teletext, VPS-PDC and OSD.
The SAA5563 is controlled by the I²C bus SDA1 (pin50) and SCL1(49). Control line ITXTINTCO is used as an additional communication line. It indicates when a further transmission may be sent to the SAA5563.
TVBAD control (port expander)
The ports controlled by the microprocessor are either arranged as outputs for control lines (pins 3, 4, 5, 6, 7, 11, 12, 17, 18, 19, 46, 47, 48, 51 and 52), as PWM ports for pulse-wide modulated signals for setting the volume for mono devices (pin1) or in devices with a radio function to output the timer-buzzer alarm signal (pin2).
pin9 is used as a read-in port for the AGC voltage from tuner1 and pin10 for reading in pin8 from SCART1.
TELETEXT, VPS-PDC (data decoding)
The Painter decodes the following file types from CVBS (VTV or VPDC): WST Teletext (625/525), Closed Caption, VPS, WSS. The extracted data is stored either in the memory interface or in the special function registers (SFR). The time can also be read from the TXT header line or from the PDC format1 (for "Time download").
The following modes (data formats) are identified:

- VPS (Timer data and sender name)
- PDC Format 2 (Timer data and sender name)
- PDC Format 1 (sender name and date)
- TXT header line (time for "Time download")

OSD
Display
The data to be displayed from Teletext pages or from OSD pages are written to the memory interface. The display unit generates the required RGB signals (RTXT, GTXT and BTXT) and the fast blanking signal VDS (BLTXT). The RGB signals and the fast blanking signal are fed to the IC7205 (TV-IC).
Synchronization
The display is synchronized with the IC7205 (TV-IC) using the horizontal sync (HFB/ pin36) and the vertical sync (VGUARD/ pin37). Due to this external synchronization, the display for Painter

is in "Slave Sync Mode". All display timings are derived from these signals. No artificial sync is generated due to the slave sync mode. The VDS output (BLTXT) on pin 35 means that subtitles can also be used.

For devices with 2 tuners, the VPS/ PDC decoder-IC7960 SDA5650 on the RUBAD is used to decode the VPS/ PDC data. This reads the data from the vertical blanking gaps and supplies it to the controller via the I²C bus SDA0 and SCL0.

2.3 Deck electronics (DE) - RUBAD

2.3.1 Deck interface SAA 1310

a) CTL stage

The IC SAA1310 (IC7443) contains a write/read stage for the CTL track, providing the option of overwriting an existing CTL track free of interference (e.g. if another index code is written onto the tape in Play mode). The playback stage is equipped with a "digital" two-stage AGC. This logic circuit identifies the size of the output signal supplied by the CTL head via comparators, and then selects the best amplification ratio in the playback stage using comparators.
Note: The playback signal follows the law of induction (di/dt) and is therefore largely proportional to the tape speed. It can therefore vary considerably from the maximum speed v_{max} in the FAST SEARCH mode to v_{min} in the LP mode (slowest tape speed). To ensure that the pulse-interval ratio of the tape sync is always correctly reproduced with the conditions given above, the amplifier must not be overdriven. The two-stage AGC alone cannot cover the large dynamic range of the input voltage. The amplifier is therefore also equipped with an internal low pass characteristic (f_g=3kHz typ.).
The amplification is also influenced using transistor T7442 and resistor R3452. The transistor is purposely inversely polarized because the inverse operation has better damping properties for this application. If T7442 is blocked (WIND mode), the external resistor R3448 is located in the feedback loop which reduces the amplification. The short-circuiting of R3452 with T7442 (in PLAY and REC) increases the amplification in the following ratio; g_{on} / g_{off} = 1+R3452 / 100. The RC cell C2473 and R3454, connected in parallel with the CTL head, together with the CTL head inductance, causes a resonance step-up around 10 kHz. R3454 produces a steep fall in the frequency transmission characteristic beyond the resonant frequency, providing an efficient suppression of stray high frequency pick-up. The CTL head signal amplitude in SP is around 1 to 2 mV_p. This means that the gain of the playback amplifier has to be correspondingly high. To avoid offset problems, a 47µ electrolytic capacitor (C2471) is inserted in the negative feedback branch for DC decoupling. Together with the internal 100Ω feedback resistor, this electrolytic capacitor acts as a high pass filter. Its capacity must be large enough to ensure that the differentiating effect is beyond a cut-off frequency, where the distortions of the signal shapes remain negligible at the lowest tape speeds. Otherwise overshoots could occur after each change of magnetism on the tape, resulting in faulty triggering of the internal logic and therefore in faulty sync signals.
The W/R (Write/Read) signal is used to switch over between record and playback:

- W/R "high" > Record
- W/R "low" > Playback.

The SYNC line on pin 16 is bi-directional. In Rec. mode, a rectangular signal with a period of 40 ms is generated by the TVC (24ms high,16ms low) and fed to the CTL IC on pin 16 (=SYNC). The recording amplifier in the SAA1310 converts this voltage into a recording current of approx. ±2mA.
In playback mode, the corresponding sync signal from the tape, pre-amplified by the CTL stage in the SAA1310, is output to pin 16 and fed to the AIO. pin 3 in the SAA 1310 is the buffered output of the IC's internal 2.5V reference voltage (±0.1V).

b) Sensor interface

The four comparators in the SAA1310 are used to convert the analog signals to the logic level. Two of these comparators have open collector outputs (pins 11 and 13), which can switch a current of 100 mA. The outputs are overload protected by a current limiter and thermal overload protection. Only the non-inverting input on each comparator is accessible from the outside. The other inputs are connected to an internal reference of 2.5V. The hysteresis of the comparators is set internally to approx. 10mV.
The following sensors are evaluated:
WTR (Winding Tachometer Right)
Comparator 2 (In WTR/pin 6; Out WTRD/pin 14)
This signal comes from a reflected light barrier. The output amplitude of the sensor must have a minimum variation of between 2V and 3V to ensure correct evaluation.
WTL (Winding Tachometer Left)
Comparator 3 (In WTL/pin 7; Out WTLD/pin 13)
This signal is required for the turbo functions. It functions in the same way as the WTR stage.
FG (Capstan Tachometer)
Comparator 4 (In FG/pin 8, Out FGD/pin 11)
The amplitude for this virtual sinewave signal is approx. $1V_{pp}$. The minimum acceptable level is $300mV_{pp}$. The signal is AC-coupled via C2490. This means that input pin 8 is connected to the reference voltage pin 3 via resistor R3456 (bias current and DC offset). R3456 together with C2474 creates damping to prevent high frequency interference. However, R3456 and R3470 also create a voltage divider which suppresses the signal (by approx. 0.8dB).

2.3.2 Head drum motor driver

DRUM: Speed/phase - control signal (14 bit resolution).
PG/FG: Combined POS/tachometer signal (comes from the TDA5241).

The current consumption from the 14M line is typically 70mA, which rises to approx. 0.5A when starting the motor. The head disc control voltage (speed and phase information) is output via the DRUM control line. This pulse-wide modulated signal is fed to the head drum motor driver IC TDA5241 (7446/pin 13) and integrated with capacitor C2492. This IC already has a completely integrated 'start-up' circuit fitted. For the commutation, the head drum motor driver uses the e.m.f. on the non-current carrying motor coil (transformer principle). The motor speed is also discharged from there at the same time. The phase of the head disc is discharged from a position coil. Speed and phase are combined into one signal (7446/ pin 6 -"PG/FG"). During this process the falling edge of the signal is the speed (FG/450Hz) and at 25Hz the position pulse (PG) has a positive edge. The connection from the HMO driver TDA5241 [7446] to the head drum motor is made using plug connector pos948.

2.3.3 Interface to the capstan motor:

The capstan motor on the tape deck is connected via connector 1946. CAP is the signal for controlling the Cap speed; it is a voltage which can vary between 0 and 5V without load. By means of CREV (Capstan REVerse) the direction of motor rotation can be changed (high = reverse). The capstan motor is supplied via line 9_14M2 (14V). The maximum current consumption is limited to 1A. Typical values in playback mode are approx. 0.2 to 0.3A. The capstan tachometer FG is connected directly to the sensor interface. It comes from a Hall sensor and is pre-amplified on the printed board for the capstan motor.

2.3.4 Loading motor driver:

The driver for the loading motor uses a bridged dual power op amp (IC7440, L2722). This IC can supply an output current of ±1A. All the outputs are overload protected using diodes (flyback diodes). Between the IC outputs (pins 1 and 3), a "Boucherot" circuit (1Ω/ 100 nF) suppresses any spurious 3MHz oscillation from the output stage. The output current is limited by the impedance of the loading motor (typ. 18Ω) when starting up or if the motor is blocked. One half of the bridge is controlled via the TMO line and acts as a comparator. The other half is an amplifier integrator with V_u = 3.9. A change in the input voltage (THIO) of between 0 and 5V results in a change in the output voltage of between 0V and almost Ub. With 50% modulation (THIO = 2.5V) there are approx. 7V on pin 3. C2478 integrates the 39kHz PWM signal. The polarities of the comparator (non-inverter) and the opamp (inverter) are selected as follows:

- During a Power On Reset, the AIO switches the THIO line to "Low" and TMO to "High". These polarities must be observed to ensure that the motor is not activated during a POR pulse.
- When there is a loss of the 5V supply, a separate reference divider (3451/3457) is used for the comparator section. Both outputs on L2722 are then in "common mode", thereby protecting the motor.

2.3.5 LED control for Tape End/ Tape Start Detection

The LED current is switched using transistor at pos. 7808. The ON time is approx. 1 msec with an ON/OFF ratio of 0.09.
The LED current is normally 150 mA. In order to prevent interference from the relatively high pulsed current 'spreading' through the entire unit, the LED is fed from the 14M1, and filtered by 2 NFRs [3805, 3812] with 10 Ω each and a 220µF electrolytic capacitor [2800].

2.3.6 Analog interface to the AIO

The following analog signals are sent to the AIO's internal A/D converters:

- **TRIA_ALM** Tracking Information Audio (audio envelope information stereo only).
- **TRIV** Tracking Information Video (video envelope information).
- **TAE/TAS** Tape End / Tape Start Detection

2.3.7 Evaluation of the tape deck switches

There are two switches available:

- **INIT** Initialization switch
- **RECP** Record protection

2.3.8 CMT detection

The CSYNC signal coming from the VS part is integrated a comparator (IC7800-B). The integrated signal then reaches pin 33 (port 86), where the video signal is detected using the 50 Hz evaluation.

2.4 AUDIO (AF,AL,AP,AMP,IO,SF,ACO) - RUBAD, TVBAD, SFD

2.4.1 General:

a) Mono version:

The demodulators TDA 8842 (IC7205) and TDA 9830 (IC7705) are used for the audio demodulation for front end 1. The signal from front end 2 is demodulated using demodulator TDA 9817 (IC7309). The analog switches HEF 4052 (view selector: IC7651, mode selector: IC7658, Scart output selector: IC7904) are used as an audio I/O switch. As the record / playback amplifier, the linear audio part in the single chip YCA processor LA 71527 (IC7004) is used with the following functionality: An analog sound controller and pseudo stereo stage (IC7653) is used in the sound feature version. The audio output stage (IC7450) is equipped with a power limiting switch which prevents the speakers being overloaded.

b) Stereo version:

The multi-standard sound processor MSP 3410 / MSP3415 (IC7801) is a single chip solution containing three functional groups: FM/AM & NICAM demodulation (front end 1), I/O switch, I²S interface (MSP 3410) and digital sound processing. This IC is controlled solely by the I²C bus. The MSP 3415 (IC7670) is used for the FM / AM or NICAM demodulation from the front end 2. For the Dolby sound decoding, the DPL 3518 / 3519 (IC7800) is used, which also has the functionality of a matrix I/O switch. The FM audio processor TDA 9605 (IC7640) is used for FM audio modulation (recording mode), FM audio demodulation (playback mode), noise suppression, and as an I/O switch. This IC is controlled solely by the I²C bus. The carrier frequencies and bandpass filter for the FM audio part are adjusted by the TDA 9605 independently. This adjustment is started via the I²C bus following the mains reset. The HP2 signal is used as a reference for this. The linear audio part in the single chip YCA processor LA 71527 (IC7004) contains the functionality: Linear audio input switch and ALC (Automatic Level Control) stage, recording amplifier / recording equalizer, playback amplifier / playback equalizer and head change-over switch. The audio output stage (IC7450) is equipped with a power limiting switch to prevent the speakers being overloaded, and which limits the maximum output power per channel to 5 W_{RMS}.

2.4.2 Audio IN/OUT:

a) Mono version:

The entire audio I/O is switched using analog switches (HEF 4052) which are switched using state control lines. The view selector (IC7651) switches the signals from the front end, Scart / front cinch and tape (playback mode) to the audio output stage (speakers / headphones). The mode selector (IC7658) switches the signals from the view selector and radio tuners; and the IC7658 is used to switch the pseudo stereo effect (sound feature version). The Scart output selector (IC7904) switches the signal from the front end and tape (playback mode) to the Scart output. The input source switch in the single chip YCA processor LA 71527 (IC7004) is used as the recording input selector. For the Scart and front cinch inputs, buffer amplifiers (Scart:T 7906 / (7907), front cinch: T 7400 / (7401)) have been fitted. There is a driver stage (T7907) on the Scart output.

b) Stereo version:

The entire audio input and output selection is realized in the multi-standard sound processor MSP3410/ 3415 (IC7801) (multifunctional matrix I/O switch and digital I/O interface) and in the FM audio processor TDA9605 (IC7640) (input selection for Scart, front cinch, recording and record / playback switch. The Dolby Pro Logic decoder DPL 3518 / 3519 (IC7800) is connected using a digital I/O interface (I²S bus) to the sound processor MSP3410. The I/O switches are controlled solely via the I²C bus. The recording source selection for FM audio and linear audio, as well as the FM audio / linear audio change-over during playback (automatic detection), is detected and implemented automatically in the TDA 9605. In decoder mode, the bypass function of the FM audio processor is used to loop in the audio signals. For the Scart and front cinch inputs, buffer amplifiers (Scart: T 7906 / T 7907, front cinch: T 7400 / T 7401) are used to obtain the best possible signal quality. For the rear cinch outputs, driver amplifiers (IC7900 / IC7907) are used.

2.4.3 Sound processing & view mode:

a) Mono version:

The demodulation in FM / AM receive mode is carried out by demodulators TDA 8842 (IC7205) / TDA 9830 (IC7705). The audio signal is then forwarded to the view selector HEF 4052 (IC7651) (pin 1 / pin 12). In Scart or front cinch mode, the signal is first fed through the buffer amplifier and then reaches the view selector (pin 5 / pin 14). In tape playback mode, the signal from the linear audio processor (IC7004) is fed to the view selector (pin4 / pin 11). In the sound feature version, the signal first runs through the mode selector HEF 4052 (IC7658) pin 5 / pin 12, then the analog sound controller (Bass, Treble, pseudo stereo), which is realized using IC7653 (TL 074) and then back to the mode selector (only with the pseudo stereo version) IC7658 (pin 15), before it reaches the audio output stage (IC7450). In the version without sound features, the signal is fed via the view selector (pin 3) directly to the audio output stage. The sound feature part is controlled using control lines IBASS (bass emphasis), ITREBLE (treble emphasis), MUTE_PST (pseudo stereo). The volume is controlled using a D.C. regulated pre-amplifier stage in the audio output stage (control line VOL / pin 3). In the radio tuner mode, the audio signal runs from the tuner part via the signal amplifier T7657 to mode selector HEF 4052 (IC7658) pin 3 / pin 13, before it is fed to the audio output stage. The radio tuner mode is activated using control line RAD. The buzzer operation is controlled using the signal / control line RAB, whereby the buzzer signal is fed to the audio signal path via stage

R3674 / T7660. The Scart output selector HEF4052 (IC 7904) is provided to switch the audio signal from the front end and from the tape (playback mode) to the Scart output. The selected audio signal (pin 3) then runs through driver stage T7909, before it is output on the Scart output.

b) Stereo version:

The MSP3410 / 3415 (IC7801) contains a fully digital sound controller (DSP part) and the required A/D & D/A converter stages. The DSP part includes: Volume / Balance, Treble / Bass, Loudness and special sound effects controls. An AVL (Automatic Volume Levelizing) control is also included. All sound settings are controlled via the I²C bus. In FM / AM or NICAM demodulation mode (View mode), the signal from the internal demodulator is connected directly to the DSP part. In Scart or front cinch mode the signals are first fed through the buffer amplifier and reach the input for the sound processor IC7801 (pin 52 / pin 53) via the FM audio processor (Scart: pin 6 / pin 7, front cinch: pin 2 / pin 3). In tape playback mode the signals are fed from the FM audio processor (IC7640) to the input for the multi-standard sound processor IC7801 (pin 49 / pin 50). The signals are then connected via the I/O matrix switch to the A/D converters. After conversion, the digital audio signals are conveyed to the DSP part, where they are processed digitally (pin 13). From the DSP part, the digital audio signal is forwarded to the I²S output (pin 13) for processing in the Dolby decoder (IC7800). At the I²S input (pin 14 / pin 20) on the sound processor (IC7801), the decoded digital audio signal from the Dolby decoder goes back to the DSP part for further processing (Dolby version). On the outputs on the DSP part, there are quad oversampling D/A converters for the speaker / headphone channels and the I/O matrix switch, where the digital audio signals are converted back into analog signals. (speakers / headphones: pin 29/ pin 28). The signals for the speaker / headphone output stage TDA 7495 (IC7450) are fed from the D/A converter output stages (LS). From the D/A converter output stages (HP), the signals reach the driver amplifier LM358 (IC7900) for the rear cinch output (pin 26 / pin 25). On the rear cinch output there is a mute stage fitted (T7901 / T7904) for the low-power stand-by mode, which is controlled using control line MUTE_PST. For the Scart output, the signals are fed to the I/O matrix switch output (pin 37 / pin 36).

2.4.4 Dolby decoding - APDOD

The DPL3518 / 3519 (IC7800) contains a fully digital Dolby Pro Logic decoder and a digital I/O interface (I²S bus) with a multifunctional matrix switch. The coded audio signal is converted in the sound processor (IC7801) (A / D converter) and reaches the input (pin 12) of the Dolby decoder (IC7800) via the I²S interface (output: pin 13) . Further processing is carried out purely digitally in the DSP part of the decoder. The signal on the output of the DSP part is forwarded to the I²S output (pin 11 / pin 19) where it reaches the sound processor (IC7801) and is available for further processing (I²S input : pin 14 / pin 20). From the output of the DSP part (DPL 3519), the decoded digital audio signal goes via a matrix switch to the D/A converter stages where the digital signal is converted back into an analog audio signal. From the converter output on the DPL3519 (pin 21 / pin 25) the signal is forwarded via the driver amplifier LM358 (IC7907) to the rear cinch output for the effect channels (center / surround). On the rear cinch output for the effect channels, there is a mute stage (T7908 / T7911) which is controlled using the control line MUTE_PST.

2.4.5 Linear audio recording & playback:

a) Recording:

The signal inputs for recording are pin 71 (Scart), pin 73 (front end) and pin 75 (front cinch) from the YCA processor LA 1527 (IC7004). For the HiFi version, the signal input for recording is pin 73 (AMLR). During recording or loop through (EE), the signal runs through the linear amplifier and then the mute stage and exits the IC on the signal output pin 77. The attenuator on pin 77 (R 3611, R 3616) sets the required level for the ALC (Automatic Level Control) detector, for which the time constant is determined on pin 72. The level for the recording amplifier is determined using R 3610 and R 3615. The pre-emphasis for the recording amplifier is created using the network L 5601, C 2622, C 2623 and R 3636. In longplay recording mode, the network C 2619 and R 3621 is switched in parallel to the internal switch on pin 3. The output for the recording amplifier is pin 1 (C 2617). The recording current is then added to the bias current via resistor R 3623 and flows via the head to pin 5, where the internal switch is closed. The oscillator switching (T 7607, L 5602), which oscillates at around 70 kHz, is used as the erasing oscillator for the main erasing head, the linear audio track erasing head, and for the bias current supply. The bias current is set using potentiometer R 3630. To prevent spikes, the oscillator is switched on slowly (switching stage T 7603, time constant C 2614, R 3613, R3619 and current limiter R 3614).

b) Playback:

During playback, the internal switch on pin 7 is closed. The playback signal from the linear audio head is amplifier during the equalizer stage and exits the IC at pin 10. The de-emphasis and the amplification is determined using network C 2620, C 2628, C 3624, R3624, R 3626, R 3631 and R 3634. In longplay playback mode, the frequency characteristic is adjusted using capacitor C 2616 located on pin 4 and using resistor R 3624 which is connected to pin 9. The resistor R 3632 and the capacitor C 2627 determine the head resonance during playback. The playback signal on pin 10 then runs through the filter C 2625 and R 3628. Located on pin 11 is the input for the linear amplifier, where the signal is amplified and exits the IC via the mute stage on pin 77. A special line frequency filter (L 5600, C 2604, C 2605, C 2606, C 2607 and R 3607) eliminates line frequency interference from the useful signal. The playback signal in the buffer amplifier T 7600 is then amplified and in the mono version, fed to the I/O selector switch (IC7904 / IC7651). With the HiFi stereo version, the signal is fed to pin 22 (AMLP) on the FM audio processor (IC7510), which is the input for linear audio. A potentiometer (0 .. 15 dB) controlled by the I²C bus is used in the IC7640 to adjust the linear audio head and amplifier tolerances.

2.4.6 FM audio recording & playback:

a) Recording:

The audio signals from the recording front end 2 (pin 8 / pin 9), the SCART buffer amplifiers (pin 6 / pin 7) and the front cinch buffer amplifiers (pin 2 / pin 3) are conveyed to the two input selector switches on the FM audio processor TDA 9605 (IC7640), which select the corresponding signals for the FM audio and the linear audio part. The signal coming from the input selector switch (INPUT SEL) reaches, via a stereo level actuator (VOLUME L/R) controlled by the I²C bus and a deep pass filter (fg > 30 kHz), the NOISE REDUCTION block which compresses the dynamics during recording. The compressed signal is then fed to both FM modulators (left channel: 1.4 MHz and right channel: 1.8 MHz carrier frequencies). Both carriers are added and fed to the FM audio head amplifier. Via the recording / playback switch on the head amplifier, which is switched using the control line RMA, the FM signal reaches the output (pin 35, pin 36, pin 37) on the FM audio processor and then the audio heads via the rotating transformer. The TRIA_ALM line forwards the size of both audio signals (1 V_{RMS} = 2.68 V_{DC}) to the AIO-µP (IC7900). This DC level information is required during recording by the SCART or front cinch socket to prevent overmodulation of the FM carriers. When the audio signal levels are too high, they are attenuated using the VOLUME controller via the I²C bus.

b) Playback:

The FM signal from the audio heads goes via the rotating transformer to the recording / playback switch (pin 35, pin 36, pin 37) on the head amplifier. After amplification in the head amplifier (63 dB), the FM signal reaches the HF-AGC (Automatic Gain Control), where the tolerances of the tape, the heads and the rotating transformer are balanced. Via the two band pass filter and limiters, the FM signals reach the PLL demodulators. Head change-over interference is suppressed using SAMPLE & HOLD stages (triggered by the HP2 signal). The demodulated signals are then expanded into the NOISE REDUCTION stage. The hi-fi signals on the output selector switch are then available (hi-fi output pin 16 / pin 17). If there is no FM on the tape during playback, the output selector switch is switched over automatically from the IC to linear audio (input pin 22). In playback mode the TRIA_ALM line supplies the level of the FM envelope curve to the AIO-µP (IC7900).

This level information from the FM envelope curve is used for the hi-fi tracking of the rotating FM audio heads to achieve the best possible playback quality (normal: $3.5V_{DC}$).

2.4.7 HiFi audio interface to the linear audio:

In recording mode, the input selector switch NORMAL SEL in the FM audio processor (IC7640) selects the audio source and issues this signal to pin 21 (AMLR). The audio signal then reaches the audio part of the YCA processor LA71527 (IC7004) on pin 73. The input selector switch in the IC7004 is always set on the input IN 2 (pin 73). During playback, the AMLP signal from the linear audio part in the YCA processor (pin 77) is carried via pin 22 from the FM audio processor to the playback level attenuator which can be adjusted in service mode using the I²C bus.

2.5 Receiver part (TU1,TU2) - TVBAD, RUBAD

The DELTA TVCR receiver part design permits component options to be used to create both a single or multi-standard mono 1 tuner front end with or without radio, and a multi-standard stereo 2 tuner front end. With the second tuner and the relevant front end circuit sections the VCR and TV parts can receive transmissions from the applied antenna signal independently from one another. With the stereo version, the sound processors of types MSP 3410D, 3415D and MSP 3415D-QG-A2 are used for the sound demodulation for the various TV standards.

2.5.1 Front end 1 (TV tuner)

The 1st tuner on the TVBAD pos. 1700/ 1701 is designed as a single or splitter tuner combination. With a two-tuner device, the splitter divides the incoming antenna signal into signals for the TV tuner and the VCR tuner connected using a short HF cable connection.

a) Single standard MONO intercarrier front end for the TV NORM BG, I, DK, K1:

The IF signal from tuner 1 pin 11 is offered for demodulation via OFW pos. 1707 to the front end part of the TV ICs TDA 8840/42 pos.7205 on pins 48 and 49. The IC TDA 8840 demodulates audio and video signals in the standards PAL B/G, PAL I. For the SECAM standard D/K and K1, the TDA 8842 type is used. The intercarrier signal on pin 6 is fed via a driver stage pos. 7702 to the filter pos. 1702 and, freed of video parts, to the TV-IC on pin 1 for audio demodulation. Via the AUDIOOUT pin 15, the NF audio signal is fed to the FE output **AFV1**. The video trap pos. 1704 frees the video signal from sound carrier remainders. Via emitter follower pos. 7704, the front end video signal reaches **VFV1** for further processing. The TV-IC has an AFC which does not require any adjustment. The HF AGC is adjusted using the service menu.

b) Dual standard MONO intercarrier front end for the BG/DK and BG/I TV standards:

The IF signal from tuner 1 pin 11 is subject to selection via HF switching diodes pos. 6700/6705 according to the relevant TV standard via OFW pos. 1707 (BG) or pos. 1708 (DK). The selection of the TV standard is controlled via line **PSS1**. With the BG/I version, only one OFW G1965M is used on pos.1707 for both TV standards. The TV-IC TDA 8842 (TDA8840 for BG/I) then demodulates the audio and video signal as described above. The sound carrier is selected using a switchover on pos.7701-A using control line **MNT1**. The BG sound carrier is filtered via pos.1702, and the DK or I sound carrier via pos. 1703. Via the AUDIOOUT pin 15, the NF audio signal is fed to the FE output **AFV1**. So that the video frequency response in the DK or I TV standards is not clipped too soon by a 5.5MHz trap, a video trap for 6.5MHz or 6.0MHz is selected using switch pos. 7701-B on pos. 1705. This is carried out on control line **TU1A_B**.

c) Multi-standard MONO FM intercarrier/AM QSS front end for the TV standards BG/I/L,L'

The IF signal from tuner 1 pin 11 is offered for demodulation via a 40.4MHz trap (coil 5701) and via OFW pos. 1708 to the front end part of the TV ICs TDA 8842 pos.7205 on pins 48 and 49. This demodulates the video signal of TV standards PAL BG,I and SECAM L,L' and the signal for the FM audio sound carriers 5.5MHz and 6.0MHz required for PAL via the switchable filters 1702 and 1703. The switchover is carried out using control line **MNT1.**
The AM audio required for the SECAM L,L' TV standard is obtained from the IC TDA 9830 pos. 7705. To do this, the IF coming from tuner 1 is connected via HF switching diodes pos. 6706/6707 using control line **SB1_1** on the relevant input on the OFW pos. 1711 for selection (pin 1 SEC L' 40.4MHz/pin 2 SEC L 32.4MHz). The demodulated AM audio signal exits the IC 7705 pin 6 and is fed via coupling capacitor 2716 to the external input on the TV-IC pin 2. From the TV IC the audio signal conforming to the TV standard is switched through to pin 15 (AUDIOOUT) and to front end output AFV1. The TV standard switchover between positive and negative modulation (PSS) is carried out via the I²C bus on the TV IC. The double trap pos. 1704 frees the video signal of PAL BG, I- sound carrier remainders. So that the video frequency response in the SECAM L,L' TV standards is not clipped too soon, the video trap bypass is selected using switch pos. 7701-B. This is carried out on control line **TU1A_B**.

d) Multi-standard STEREO hybrid front end for the TV standards BG/I/DK/L,L'

The IF signal from tuner 1 pin 11 is offered for demodulation via a 40.4MHz trap (coil 5701) and via OFW K3953M pos. 1708 to the front end part of the TV ICs TDA 8842 pos.7205 on pins 48 and 49. This demodulates the video signal for the PAL I and SECAM L,L' TV standards with a flat group delay time. The HF-AGC is controlled by the TV IC. It is adjusted in the service menu.
The video signal for PAL BG and PAL/SECAM DK, and the AM audio signal for SECAM L,L' and the intercarrier signal for all FM and NICAM sound carriers are generated in the QSS process by IC TDA 9818 pos. 7720. Via OFW G3956M pos. 1709 the IF video signal is selected using a group delay time pre-equalization typical for PAL and offered to the video demodulator on pins 1 and 2.
The IF required for the audio demodulation is connected via HF switching diodes pos. 6701/6702 using control line **SB1_1** to the relevant input on the OFW pos. 1710 for selection.
Via pin 1 on the OFW K9456M the IF for SECAM L' reaches the audio demodulator with 40.4MHz. pin 2 selects the FM, AM and NICAM sound IF for the TV standards BG, I DK, L from 32.4 to 33.4MHz. By selecting this OFW, only sound carriers without interference from video sections are allowed through.
The audio IF output signal from the TDA 9818 is an audio IF signal gained during the QSS process. FM sound carriers are converted from the picture IF level into the audio IF position. The audio IF signal is then demodulated in the MSP 3410/15D pos.7801 on the APDOD sub-printed board and processed further. In the case of SECAM L/L, the TDA 9818 also demodulates the AM carriers. The demodulated audio signal pin 8 gained in this way is available on the **AFV1** and is connected from the IO part of the MSP 1 together with the other internal and external sources if necessary.
From pin 16 via R3727, the video signal reaches video trap pos. 1704. Once there, the video signal is freed of sound carrier remainders and fed to the switch pos. 7701-B. Using control line **TU1A_B**, the video signal from the TDA 8842 (SECAM L, L', PAL I) or the signal from the TDA 9818 (PAL BG, DK) is selected and reaches the front end video signal output VFV1 via emitter follower pos. 7704.
Control line **PSS1** switches the demodulator IC between negative and positive (SECAM L, L') modulation. The AFC reference circuit pos. 5707 is adjusted from 38.9MHz to 2.5V on pin 17 for an IF frequency.

Multi-standard sound demodulator MSP 3410/15D

The MSP 3410D (pos.7801) is a multi-standard sound processor which can demodulate FM Mono/Stereo, NICAM and AM signals. To do this, several audio input and output signals can be switched. The MSP 3410D can therefore be used to realize a stereo audio I/ O. The MSP 3410D can select from 2 audio IF signals. However, only one input is used in this device. The incoming signal is first controlled and then digitized. The digital signal is then demodulated in 2 separate channels. In the first MSP channel, FM and NICAM (B/G or I) are demodulated, whereas in the second MSP channel, FM and AM is demodulated again (NICAM L corresponds to NICAM B/G). These demodulated signals are selected digitally in the I/O and switched to the D/A converter on the outputs. Amplitude and bandwidth of the demodulated audio signals can be determined in the MSP using the corresponding commands via the I²C bus. This means that the setting required for the best possible performance can be made. In DELTA stereo only

the German stereo/mono and NICAM audio signals for the standards B/G, I and D/K are demodulated by the MSP.
The only difference between the MSP 3410D and the MSP 3415D is that the MSP 3415D has fewer I/O options than the MSP 3410D.

2.5.2 Front end 2 (VCR tuner)

From the splitter in tuner 1 comes the antenna signal to tuner 2 on the RUBAD pos.1301. The IF signal from tuner 2 is processed by another demodulator IC of type TDA9817T/18T pos.7309. The demodulator is used to demodulate pos. or neg. modulated picture carriers and to gain a QSS sound IF signal for the demodulation in the MSP 3415D-QG-A2 MSP2 pos.7670.

a) Single standard MONO intercarrier front end for the TV NORM BG, I, DK, K1:

The IF signal from tuner 2 pin 11 is offered for demodulation via OFW pos. 1302 to the demodulator IC TDA 9817T pos.7309 on pins 1 and 2. The IC is offset into the intercarrier mode by an earthing jumper on pin 24. The sound carrier in intercarrier signal on pin 12 is fed via a filter pos. 1306 selected according to the TV standard to the FM demodulation input pin 13. The NF audio signal is then available on pin 8 and thus on front end output **AFV2** for further processing. A video trap pos. 1304 frees the video signal of sound carrier remainders. Via emitter follower pos. 7305, the front end video signal reaches **VFV1_2** for further processing.
HF-AGC: The IF amplitude on tuner output pin 11 on 550 mV_{pp} is set using controller 3307. Input condition 74 dBµV HF signal without sound carrier.
AFC: The reference circuit pos. 5300 is adjusted for an IF frequency from 38.9MHz to 2.5V on pin 17.

b) Dual standard MONO QSS front end for the BG/DK and BG/I negatively modulated TV standards:

The IF signal from tuner 2 pin 11 is offered for the BG/DK version via OFW pos. 1302 to the demodulator IC TDA 9817T pos.7309 on pins 1 and 2. For BG/I the IF is fed via HF switching diodes pos. 6300/6301 using control line **RCLK_MNT2** to the relevant OFW modified for the TV standard. The OFW G3956M pos. 1302 has a group delay time pre-equalization required for PAL, whereas the OFW K3953M pos. 1300 is modified for the I TV standard. The IF required for the audio demodulation is conveyed via HF switching diodes pos. 6303/ 6304 to the OFW pos. 1305. Via pin 1 on the OFW K9463M the audio IF for DK and I reaches the audio demodulator with 32.4MHz – 32.9MHz. Pin 2 selects the audio IF for the BG TV standards, from 33.4MHz. By selecting this OFW, only sound carriers without interference from video sections are allowed through. The sound carrier is selected by a switchover on pos. 7301-A. Via control line **RCLK_MNT2**, the sound carriers for BG are selected via filter pos. 1306 or DK or I via pos. 1307. The NF audio signal is available on pin 8 and thus on front end output **AFV2** for further processing. A video trap pos. 1304 frees the BG video signal of sound carrier remainders. For the I TV standard the trap bypass is switched via pos. 7301-B using control line **RCLK_MNT2**. The front end video signal **VFV1_2** goes for further processing via emitter follower pos. 7305.

c) Multi-standard MONO FM/AM QSS front end for the TV standards BG/I/L,L'

The video signal from tuner 2 pin 11 is offered via a 40.4MHz trap (coil 5301) on the OFW pos. 1300 to the demodulator IC TDA 9818T pos.7309 on pins 1 and 2. The IF required for the audio demodulation is connected via HF switching diodes pos. 6303/ 6304 using control line **RWE_SB1_2** to the relevant input on the OFW pos. 1305 for selection. Via pin 1 on the OFW K9456M the IF for SECAM L' reaches the audio demodulator with 40.4MHz. Pin 2 selects the FM and AM sound IF for the TV standards BG, I, L from 32.4 to 33.4MHz. The sound carrier is selected by a switchover on pos. 7301-A. Via control line **RCLK_MNT2** the sound carrier for BG is selected via filter pos. 1306 or I via pos. 1307. The FM or AM NF audio signal is available on pin 8 and is therefore also available on the front end output AFV2 for further processing. Using control line **RDATA_PSS2** the demodulator is switched to SECAM L,L' mode. A video trap pos. 1304 frees the BG video signal of sound carrier remainders. For the PAL I and SECAM L,L' TV standards, the trap bypass is switched via pos. 7301-B using control line **RCLK_MNT2**. Via emitter follower pos. 7305, the front end video signal reaches **VFV1_2** for further processing. The setting of the picture carrier frequency for SECAM L in the TDA 9818 is achieved by connecting pin 7 of the IC via 5K6 to earth using transistor 7300 by control line **RWE_SB1_2**. As in SECAM band 1, the AFC is not used for fine adjustment, a more precise setting is not necessary.

d) Multi-standard STEREO FM/AM QSS front end for the TV standards BG/I/D/K/L,L':

The video IF signal from tuner 2 pin 11 is fed via a 40.4MHz trap (coil 5301) and HF switching diodes 6300/6301 using control line **RCLK_MNT2** to the OFW modified for the relevant TV standard. The OFW G3956M pos. 1302 has a group delay time pre-equalization required for the BG and DK TV standards, whereas the OFW K3953M pos. 1300 is modified for PAL I and SECAM L,L'. The IF required for the audio demodulation is fed via HF switching diodes pos. 6303/6304 to the OFW pos. 1305. Via pin 1 on the OFW K9456M the IF for SECAM L' reaches the audio demodulator with 40.4MHz. Pin 2 selects the FM, AM and NICAM sound IF for the TV standards BG, I DK, L from 32.4 to 33.4MHz. By selecting this OFW, only sound carriers without interference from video sections are allowed through.
The audio IF output signal from the TDA 9818T is an audio IF signal gained during the QSS process. FM sound carriers are converted from the picture IF level into the audio IF position. The audio IF signal is then demodulated in the MSP 3415D-QG-A2 pos.7670 and processed further. In the case of SECAM L/L, the TDA 9818 also demodulates the AM carriers. The demodulated audio signal pin 8 gained in this way is available on the **AFV1** and is connected from the IO part of the MSP 1 together with the other internal and external sources if necessary.

MSP 3415D-QG-A2
For a functional description, see MSP 3410D front end 1

2.6 Video IN/OUT (IO_1,TV,VS,HPAV) - RUBAD, TVBAD

2.6.1 Block diagrams

Video branch 1tuner

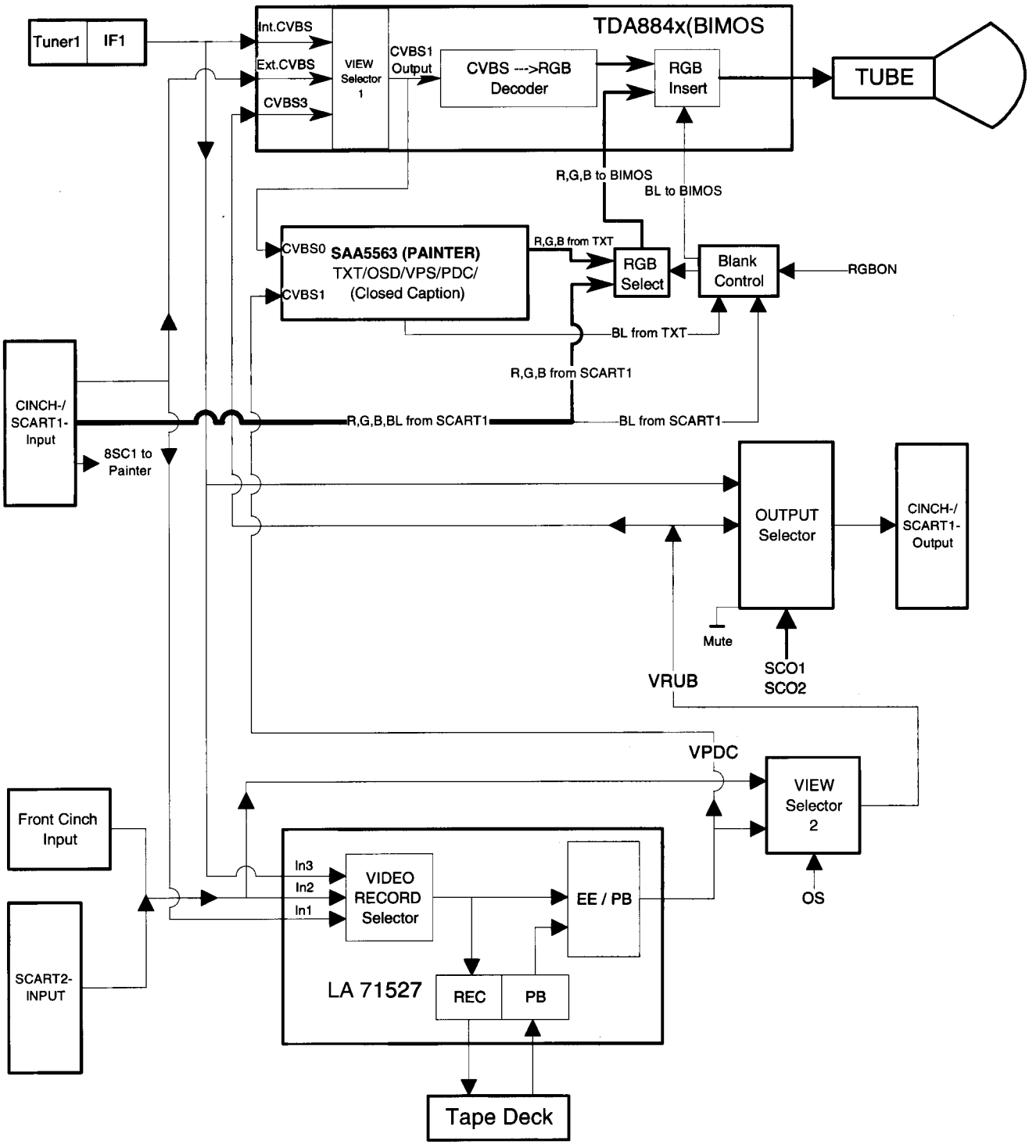

Figure 2

Video branch 2tuner

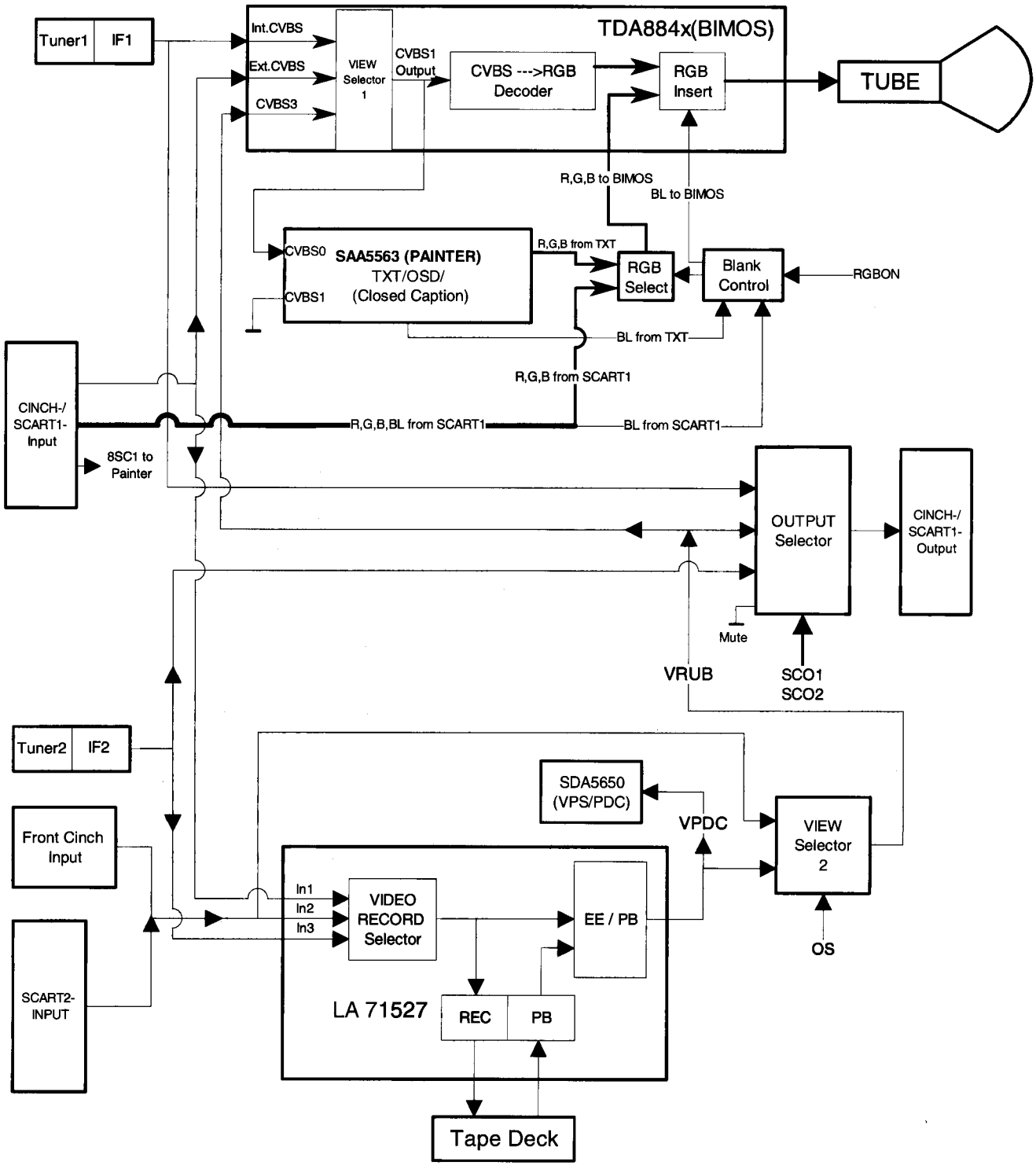

Figure 3

The entire video-in/out processing can be divided into three selectors:

a) View selector:

This selector is primarily located in the TV processing / IC7205 (view selector 1) where either tuner1 (VFV1 / pin13), Scart1 (VSCIN/pin17) or the signal from the RUBAD board (VRUB/pin11) is selected. The selected signal in the TV-IC is forwarded to the picture tube and is available on pin38 where it is fed via emitter follower 7201 (VTV) to the Painter/ IC7804 for data decoding.
The second section of this selector is located on the RUBAD board (view selector 2). The IC7503 (HEF4053) selects either the signal from the front socket or Scart2 (VFC/plug 1907 pin1) or the output for the signal processing (IC7004 pin38) and is switched from the AIO via the OS control line. The selected signal reaches the TVBAD board via emitter follower 7505 and plug 1963 / pin9. For devices with just 1 tuner the VPDC signal (corresponding to IC7004 / pin38 via emitter follower 7501) is required for decoding the VPS/ PDC data from the Painter/IC7804.
The VFC signal is either that from the 2nd Scart socket or the front cinch input. The switchover is carried out using a mechanical switch directly in the front socket on the HPAV board (front in has priority over Scart2). For devices without a front cinch (and therefore also without Scart2) this selector is not required (IC7503 on the RUBAD printed board) and the VPDC signal is used for the further processing.

b) Record selector:

This entire selector is located in the video signal processing/ IC7004 and is controlled using the bus lines SCL2/SDA2 from the AIO. The selection is carried out from the signals from Scart1 (VSCIN/ pin28), front cinch/Scart2 (VFC/ pin30) and the front end (VFV1_2/ pin32).
The selected signal is available on pin34 IC7004 and is used on pin35 IC7004 for the internal processing or as the VREC signal for the Secam signal processing. Depending on the device type, the VFV1_2 signal either represents the front end video for the receiver on the TVBAD board for 1-tuner devices or the signal from the RUBAD board for devices with 2 tuners.

c) Output selector:

This selector is located on the TVBAD board and is used to select which signal is available on the Scart1. The switch is part of a HEF4052/ IC7904 (second part used for audio for mono devices) and is controlled using SCO1/SCO2 from the Painter/ IC7804 (used as a port expander for the AIO). The selection made from video signals VFV1 (tuner1)/IC7904 pin12, VFV1_2 (tuner2, if present)/ IC7904 pin14 and the VRUB or VPDC signal from the RUBAD board)/ IC7904 pin15. For certain device statuses, a mute feature can be realized by selecting IC7904 pin11. The selected signal (IC7904 pin13) is amplified using 7902/7903 by a factor of 2 (equals 6dB) and output on pin19/ Scart1 via 3906/3909 (75Ω source impedance).
For devices with two tuners, there must not be any DC step changes during the switchover. For this reason, both signals (VFV1 and VFV1_2) are connected to the switch via clamp transistors 7901/ 7908 and emitter follower 7900/ 7905. Diodes 6907/ 6908 and 6913 are used to improve the crosstalk characteristics.

2.7 Video signal processing (VS,VSEC) - RUBAD

2.7.1 Switchover functions on the signal electronics IC LA71527:

The signal electronics IC LA71527 [7004] is controlled via the I²C bus (SCL2, SDA2) on pins 63 and 64 on the microprocessor (IC 7900).

REC/PB
via the I²C bus [during RECORD pin 19 (REC HIGH OUT) goes to 5V (not used)]

PAL/SECAM/MESECAM/NTSC
via the I²C bus (during NTSC playback pin 43 goes to 5V)

SP/LP/SLP
via the I²C bus

VIDEO INPUT SELECTOR SWITCH
Using the I²C bus, the video on pins 28 (SCART), 30 (front cinch) or 32 (tuner 1 or 2) can be selected and connected.

VIDEO ENTRY
On pin 33 (FFP), the artificial picture pulse is keyed for playback features and the test picture for the device installation:

Loop through	<	0.8V
Artificial picture pulse	>	3.8V

COLOUR VECTOR
The colour vector is adjusted using pin 67 (CSCP):

Normal	<	0.8V
LP features, colour	=	⎍

2.7.2 Recording:

a) Luminance

The video input signal (pin 28 = SCART, pin 30 = front cinch or Scart2, pin 32 = front end 1 or 2) is connected in the IC7004 and is available on pin 34 as VREC with $1V_{pp}$. Via an electrolytic capacitor it reaches pin 35. In the IC7004 the video signal first goes through an amplification control process (time constants determined by C 2041). After the AGC, the signal reaches a terminal stage, is attenuated by 6 dB and goes via a 3.5 MHz deep pass filter (chroma suppression) to the vertical emphasis (out: pin 42, in: pin 40). This emphasis comprises a 1H-CCD delay line in the IC7002 (in: pin 5, out: pin 7) and an emitter follower 7003. The signal then travels via another emitter follower 7005 from pin 25 to pin 26. The filter based on the emitter follower does not function in REC mode due to the low resistance of the emitter follower. The Y signal then travels through the detail enhancer, the non-linear emphasis, the linear emphasis (time constant via pin 23,24) and the white/dark clipping stage. The signal generated in this way then triggers the FM modulator directly. Before the FM signal exits the IC at pin 18, it travels through a deep pass filter. It is then fed as an FMRV via an external emitter follower 7013 and R3105 to be added to the chroma signal.

b) Chrominance PAL

The chroma signal is separated from the incoming video signal (pin 35) by a band pass filter (BPF1) and reaches an ACC stage. The ACC amplifier stage controls the chroma amplitude for the subsequent stages (time constant via capacitor on pin 13). The chroma signal is then conveyed to the main converter. The main converter mixes the 5.06MHz subcarrier on the auxiliary converter with the 4.43 MHz chroma signal to the 627kHz chroma FM signal. The subcarrier is a mixture of 4.43MHz (the REC APC time constant on pin 54 compares quartz and burst frequency) and (40+ 1/8) f_H = 627kHz (produced by $321f_H$ -VCO, time constant pin 49/51 and phase rotation in accordance with the VHS standard, control pin 66). Via a band pass filter and the colour killer stage, the converted chroma signal reaches pin 14 on the IC, from where it is added directly to the Y FM signal via resistors 3102 and 3103. The colour killer can either identify the incoming signal on its own (PAL yes/no, PAL: chroma signal out, SECAM L: chroma signal killed) or be set to PAL or SECAM L using the I²C bus. The quartz oscillation (pin 56) is used both as the reference frequency and for the chroma processing, as well as for generating the pulse frequency for the combined CCD [7002, pin 10].

c) MESECAM

The signal path is virtually identical to the path for PAL.
The differences are:

- No phase rotation.
- Broader filter characteristics for the chroma bandpasses.
- Free-running quartz frequency.

d) SECAM L

The FBAS signal (VREC) from the IC7004 runs via C2072 to pin 15/IC 7072 (SECAM L chroma signal processor LA 7339), completes a 4.3MHz-BP within the IC, and then to the bell filter (HF cloche) which reverses the sender-side HF pre-emphasis. In addition, the IC generates the 1.1 MHz signal required for recording using frequency separation (1:4) of the chroma signal. The signal is then blanked during the line synchronous pulse period and reaches the 1.1MHz-BP which suppresses the harmonics produced in the frequency separation process. The next anti-

cloche filter produces the FM pre-emphasis again, which is provided as standard for a Secam chroma signal. This signal then exits the IC on pin11 and runs via a 3.3MHz trap C2080 / L5073 and emitter follower 7073 as CSRV for addition to the luminance FM signal. The Secam recording current is set using controller 3086.

2.7.3 Playback:

a) Luminance

The FM playback signal goes from the head amplifier IC 7104/05 to the signal electronics IC7007, pin 15 as an FMPV. In the IC7004, the level of the envelope curve is first controlled and then filtered in the FM processing. On pin 17, the signal exits the IC, runs through a phase shifter and a transistor stage to adjust the filter characteristics and re-enters the IC7004 on pin 20. The FM signal limited using the double limiter is demodulated and filtered using a deep pass.
The demodulated Y signal is also affected by the recording-side pre-emphasis. This then deals with the linear de-emphasis on the basis of the emitter follower 7005. The filter connection is effective because in playback mode, pin 25 becomes the open collector output. The load impedance for this output is determined by the de-emphasis circuit. Using a peaking stage (pin 22) the frequencies are raised by approx. 2.5 MHz. The Y signal is then terminated, filtered using a low pass, and carried by a vertical noise canceller or dropout compensator. For this purpose, the Y signal leaves the IC7004 (out: pin 42, in: pin 40) and is delayed by 1H in the IC7002. The CCD-1H delay line is effective for the Y signal first as a comb filter (vertical noise suppression) and secondly as a line storage device for the dropout compensation. The subsequent switching stages are: The non-linear de-emphasis, horizontal noise canceller and the picture control switching to the increase in edge steepness (sharpness). The chroma signal is then added to the luminance signal and output as a FBAS signal (pin 38).

b) Chroma PAL

On pin 15, the FMPV signal is carried from the head amplifier to the IC7004 signal electronics. From the FMPV signal the 627-kHz chroma signal is filtered using the internal deep pass. The ACC amplifier amplifies and controls the chroma amplitude. In the main converter, the chroma signal is mixed with 5.06 MHz back to the original 4.43 MHz. The 5.06 MHz are produced in playback from the free-running quartz oscillator and from the (40+1/8) f_H = 627 kHz frequency derived from the 321f_H-VCO. After the main converter, the chroma signal is mostly freed of crosstalk from additional traces using 2H comb filter 7002. The chroma signal is then filtered using band pass, checked by the colour killer, looped through pin 46 and 45 and then added to the Y signal.

c) Chroma MESECAM

The signal path is virtually identical to the path for PAL.
The differences are:
- The 321 f_H VCO is synchronized by the Sync.
- No phase rotation.
- The comb filter is not active.
- Greater bandwidth for the internal bandpass filter.

d) Chroma SECAM L

During playback, the FM signal is fed from the head amplifier (FMPV) to pin 13 IC7072, controlled and sent via the same 1.1MHz bandpass as for recording. The NF pre-emphasis for recording is then reversed. The anti-cloche switching in recording is used here as cloche switching. In the next stage, the frequency of the signal is doubled. The 2.2MHz band pass frees the signal from interfering harmonic waves, before it is doubled in frequency once more. So that the signal becomes a standard Secam chroma signal, it is provided with an HF pre-emphasis again (anti-cloche). Finally, the chroma signal runs through a mute stage and reaches the 2.2MHz trap C2076/L5071 via pin 17 and emitter follower 7071, before it reaches pin 45 of the signal electronics IC 7004 as a CSP signal via a coupling capacitor. The 3.3MHz interference level needs to be kept to a minimum using controller 3089.

e) NTSC

During the playback of NTSC signals, the original NTSC chroma is converted into a PAL chroma signal (see above for control signals). This requires an IC-internal switchover in the chroma part, but also a switchover in the CCD-IC7002 to a 1H comb filter to the crosstalk reduction. Line and picture frequencies remain unchanged in accordance with the NTSC standard.

f) PAL M,N

As for chroma PAL.

2.8 Video head amplifier (HA) - RUBAD

Head amplifier IC STV5744 for 4-head pos.7105 (STV5742 for 2-head pos.7104)

2.8.1 Recording

The changeover to recording is carried out using the FMPV line via pin 15, which functions as a switching input (with IREV via [7102]). The video recording current, which is summated from luminance and PAL/SECAM chrominance, is supplied to pin 19 (15). The recording current is then fed to pin 1(SP) or pin 11(LP) to the video heads. The current through 3110 on pin 18 (14) TRIV acts as a current reference for setting the recording current. 7106 switches (controlled by the SP recording output) with SP a resistance parallel to 3110 and therefore allows the required increase in recording current for SP. The record AGC is only specified during CSYNC=H (pin 17(13)).

2.8.2 Playback

The FM signals from the video heads are conveyed during playback via pins 5 and 7 with SP or the pins 4 and 8 with LP to the low-noise playback amplifiers. The video heads are switched using the summated HP1 and HSC signal on pin 13 (9). The CSYNC signal on pin 17 (13) ensures that the switchover between the SP and LP heads in feature mode is carried out at the next rising edge of the pulse and therefore only at the end of a line. The playback signal reaches the signal electronics (VS) as FMPV via pin 15 (11). During playback, pin 18 (14) supplies the TRIV signal which represents a DC proportional to the signal intensity. TRIV is used for the deck controller as information for auto tracking. The unused head pair is short-circuited to the amplifier inputs via pin 19 (15) (functions as a switching input during playback) to reduce crosstalk in the ring transformer in the scanners (controlled using ISWS via 7100). The ENVC signal output to pin 12 supplies to the deck µC the information as to whether or not the PB signal for the SP or the LP heads is greater.

2.9 TV signal processing (TV) - TVBAD

The center of this switching part is the IC7205, the I²C bus-controlled PAL/NTSC/SECAM TV processor TDA8840/42/44.
The most important integrated modules for video processing are:
- CVBS switchover
- Luminance delay line
- Chroma bandpass filter with switchable center frequency
- PAL / NTSC / SECAM decoder

Differences between the individual IC versions:

IC version	TDA 8840	TDA 8841	TDA 8842	TDA 8844
PAL decoder	X	X	X	X
SECAM decoder			X	X
NTSC decoder		X	X	X

2.9.1 Video signal processing

In the IC7205, the IF signal (IF-IN pins 48,49) is demodulated, runs through a video amp mute stage and exits the IC at pin 6. From there, the signal is conveyed further, as described in chapter 2.5.1 (front end 1). The "internal" front end video VFV1 then reaches pin 13/IC7205 (CVBS_INT). Other video sources for the internal switchover include the video from SCART VSCIN to pin 17 (CVBS_EXT) and the video from recorder unit board VRUB to pin 11 (CVBS_Y). The source selection is made in the IC using the CVBS switch controlled by the I²C bus. Pin 38 (CVBS1OUT, $2V_{PP}$) supplies the VTV video signal via emitter follower 7201 to supply IC7804 (Teletext decoder) with the Teletext information.

CVBS switch and video identification:

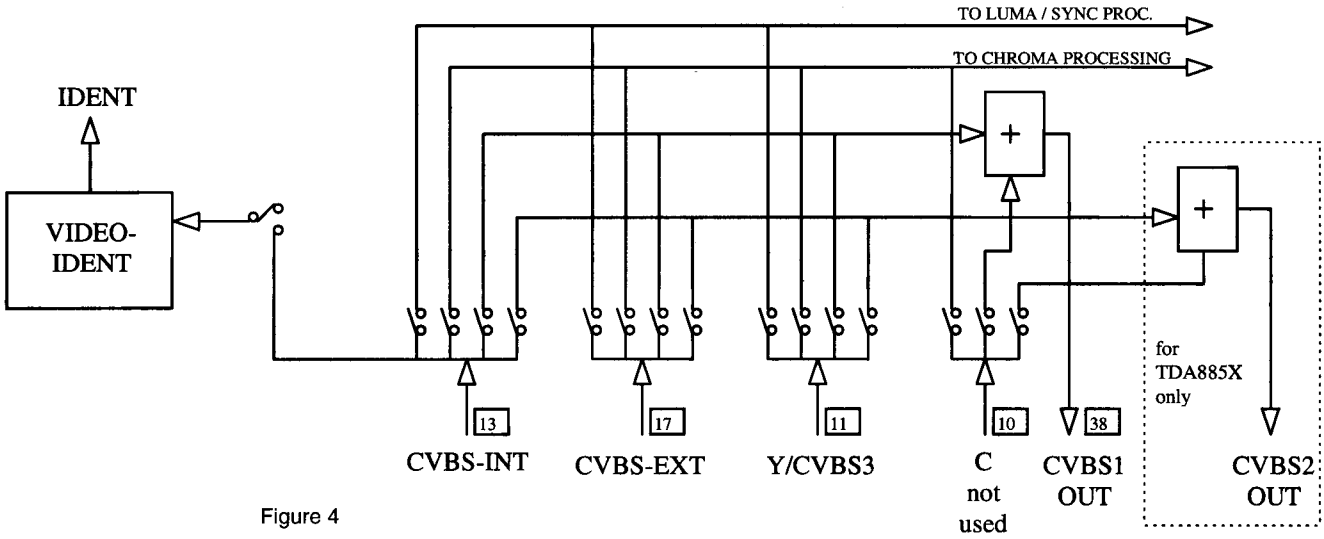

Figure 4

2.9.2 Chroma signal processing

The filters used internally in the TV-IC are active filters which are calibrated automatically. The medium frequencies of the chroma band pass filter can be switched using the I²C bus to optimize it for the various input signals. The colour decoder can decode PAL, NTSC and SECAM signals (depending on the IC type), has a colour killer stage, and two demodulators for the colour difference signals. The demodulated colour difference signals are conveyed internally to the base band delay line to improve the cross colour performance (comb filter effect).

2.9.3 RGB signal processing

The RGB signals are formed via matrix switches from the luminance signal and the colour difference signals. The TV-IC also has an RGB input stage (pin 23, 24, 25). These signals can be keyed using the fast blanking signal (pin 26). Using switch HC4053 (IC7212), either the Teletext signals RTXT, GTXT, BTXT or the RGB signals from the SCART socket RED, GREEN, BLUE are selected, controlled by the blanking pulses BLTXT or BLSC. The RGB output signals (pins 19, 20, 21) are fed directly to the picture tube printed board via plug pos.1957.

2.9.4 TV synchronization

In the TV-IC, the separated sync pulses are carried to the first phase detector ("φ-1 loop") and the coincidence detector. The coincidence detector is used to detect whether or not the line oscillator is synchronized. The "φ-1 loop" is used to synchronize the horizontal oscillator with the separated sync pulses of the selected video. The "φ-2 loop" corrects oscillations in the actual horizontal deflection depending on the beam current relative to the horizontal oscillator. For the timing of the vertical ramp, the vertical divider is used, which is synchronized to the vertical sync pulse.

Supply diagram 5AD / RUB

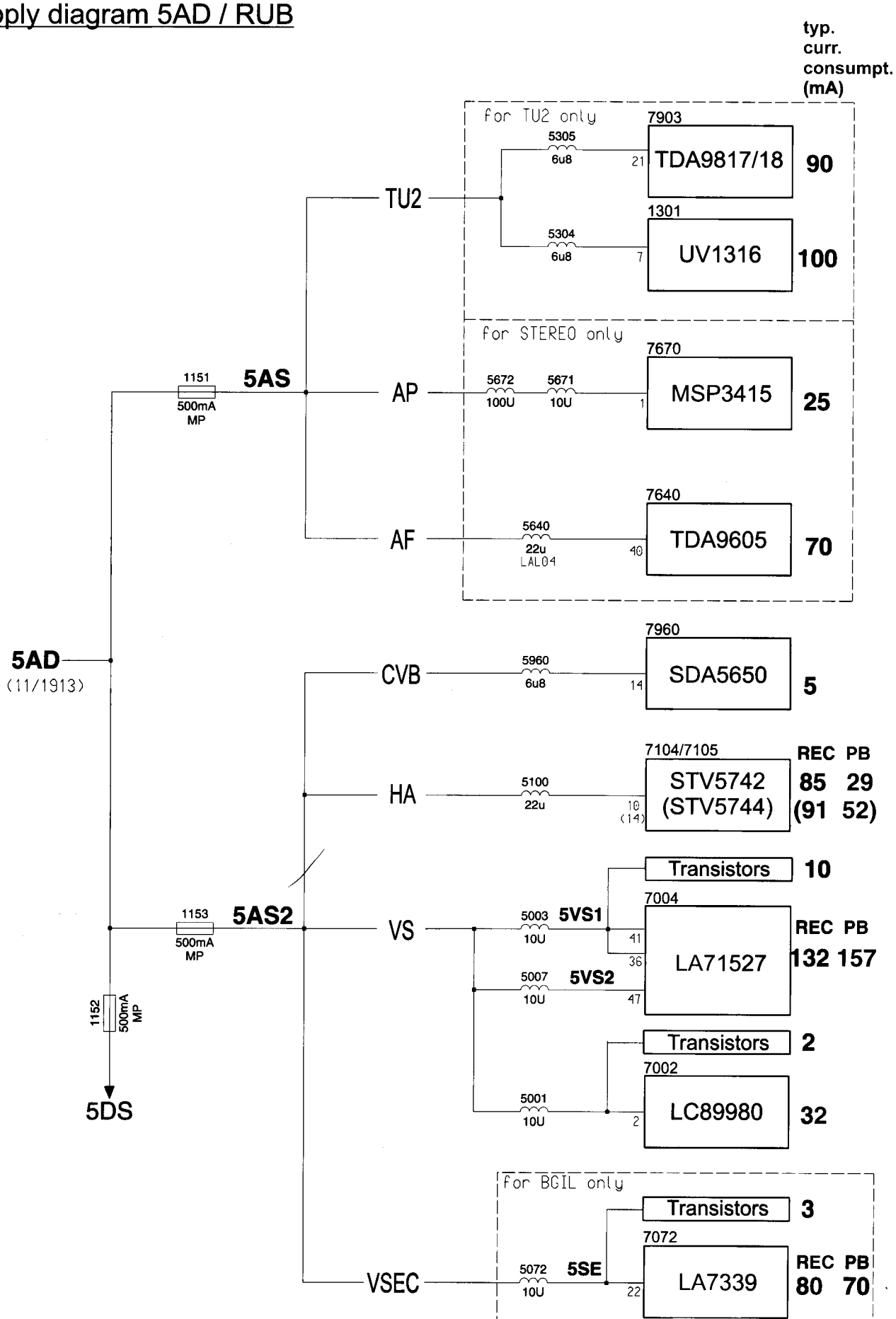

Supply diagram 5STBY / RUB

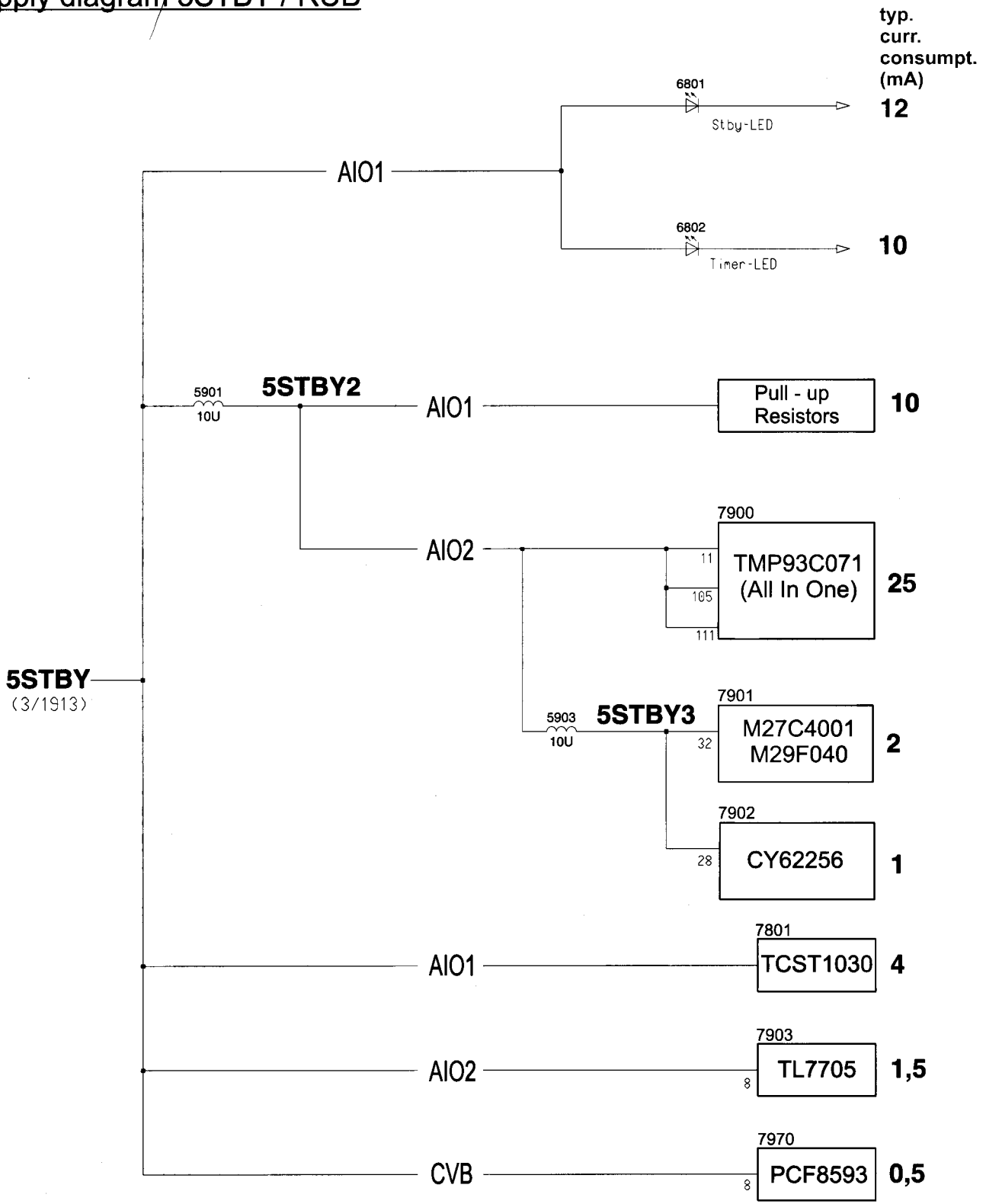

Supply diagram 5AD,14A,14M1 / RUB

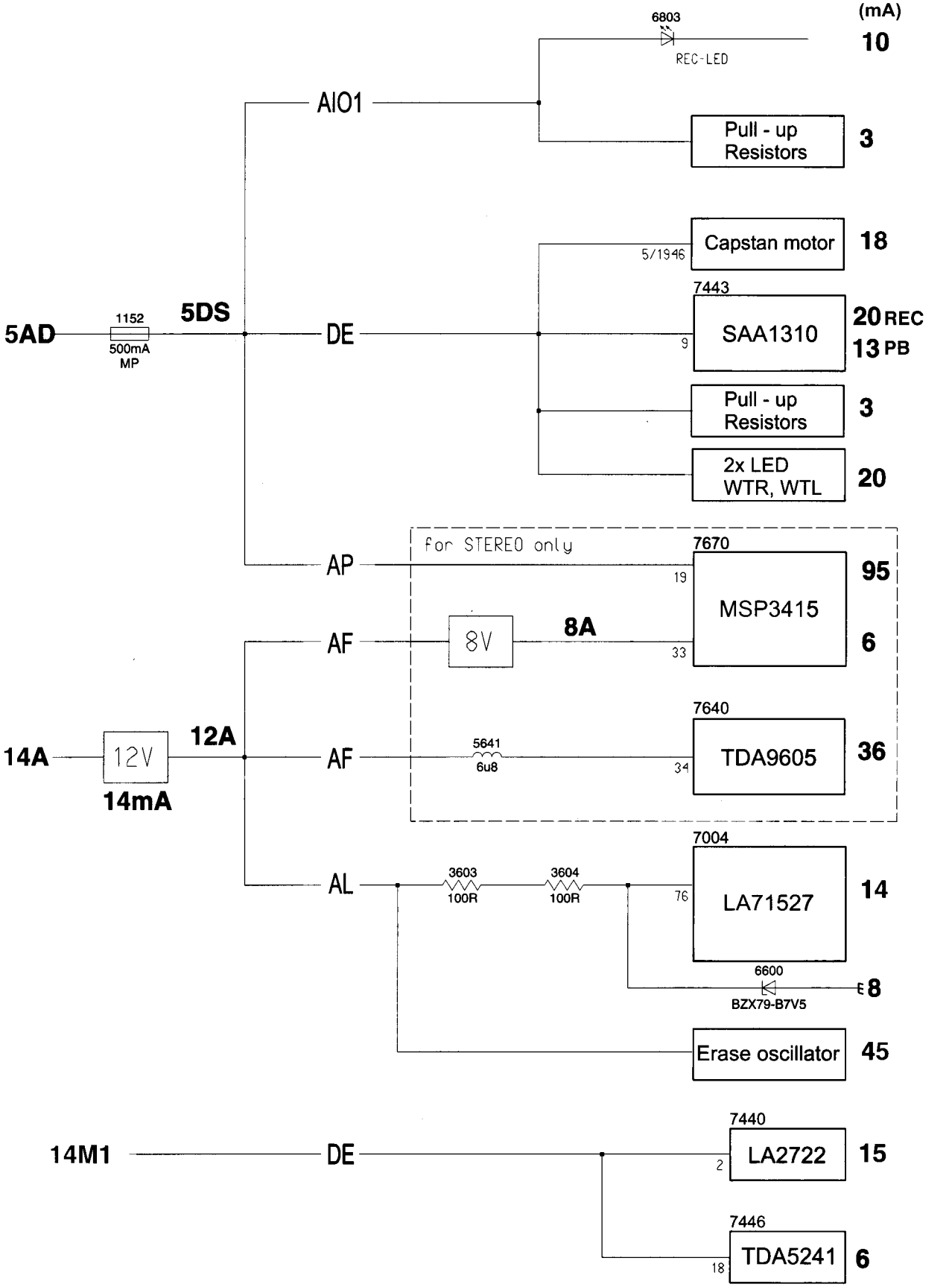

Supply diagram 5AD / TVB

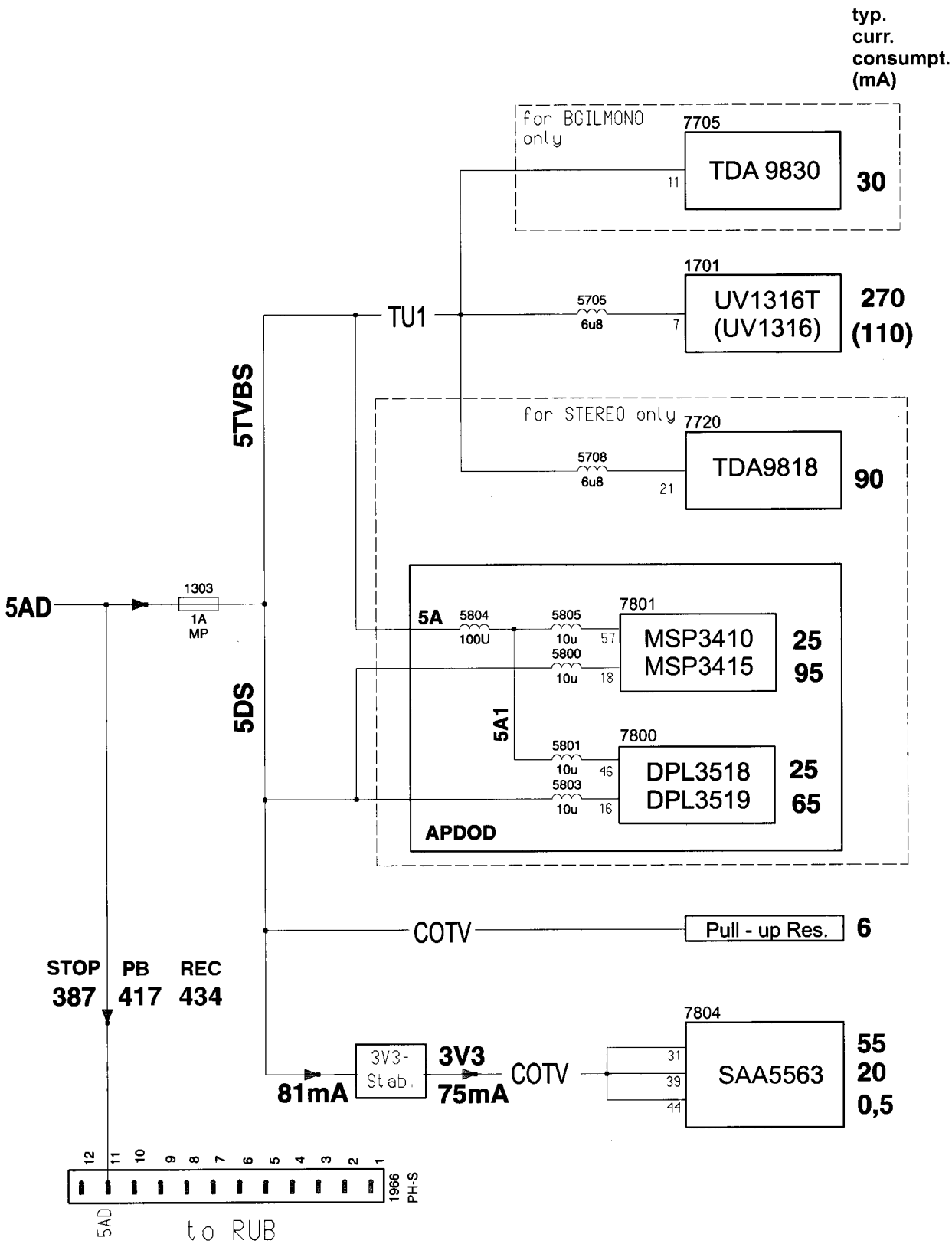

Supply diagram 14A / TVB

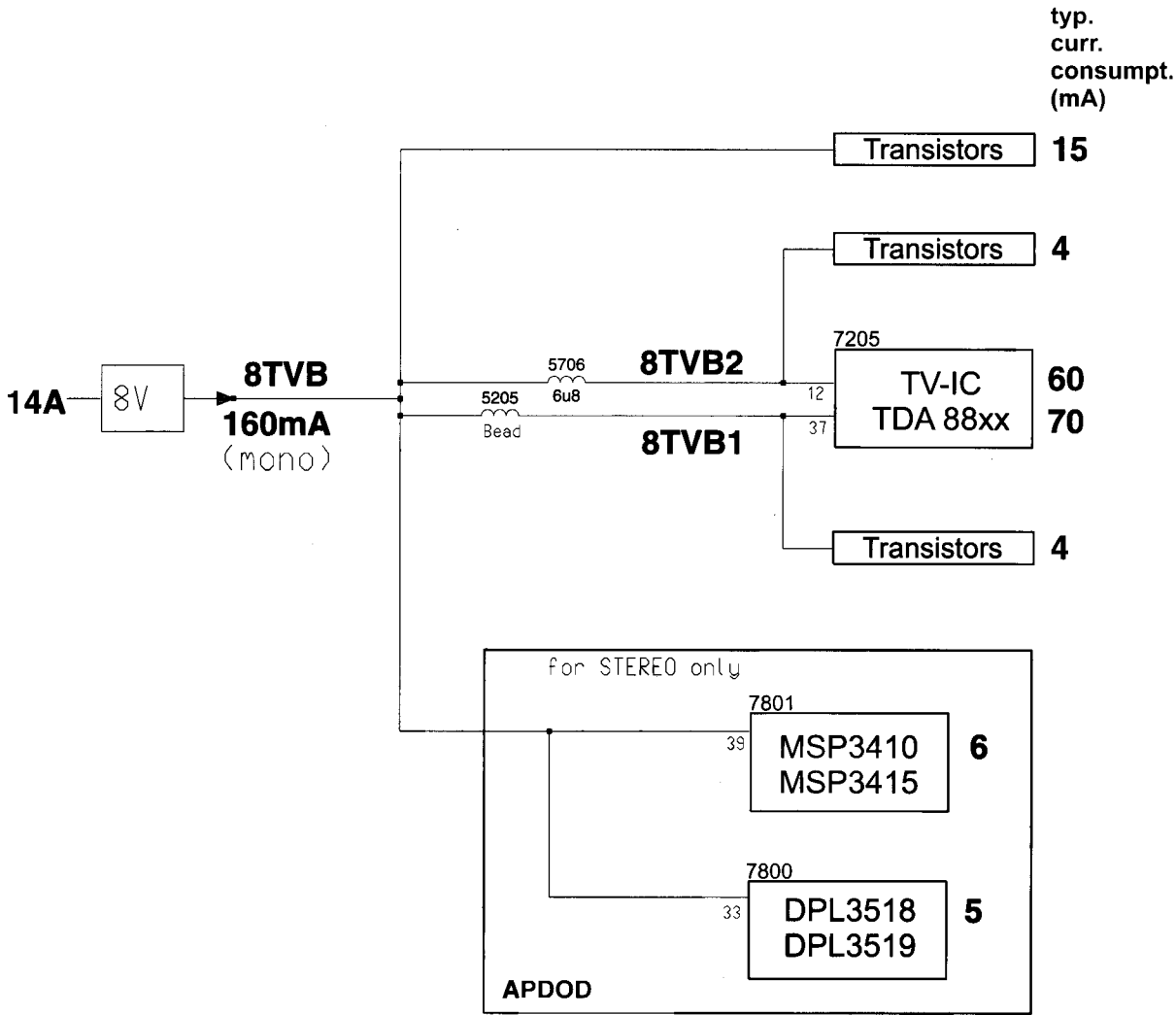

E. ELECTRICAL SETTINGS

1. MEASURING INSTRUMENTS

The following instruments are required to carry out the electrical setting work:

1. Dual trace oscilloscope
   Voltage range : 0.001 ~ 50V/Div.
   Frequency range : DC ~ 50 MHz
   Probe : 10:1; 1:1
2. Digital Multimeter
3. Frequency meter
4. Sine-wave generator : 0 ~ 50MHz
5. Test pattern generator
6. Plastic adjustment tool
7. Isolating transformer (regulating transformer)
8. VHS test cassette 4822 397 30103
   SPC test cassette 4822 397 30268

VHS test cassette

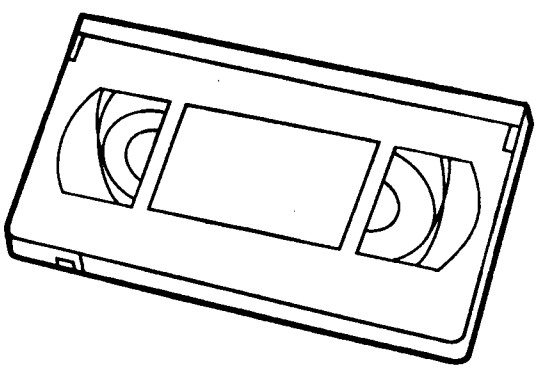

Counter Reading Start	0	0040 ±8	0310 ±12
Video	Blank	B&W Pattern	Color Bars
Audio	Blank	6kHz (mono)	40Hz, 3kHz, 15kHz (Mono & Stereo)

2. SETTING INSTRUCTIONS

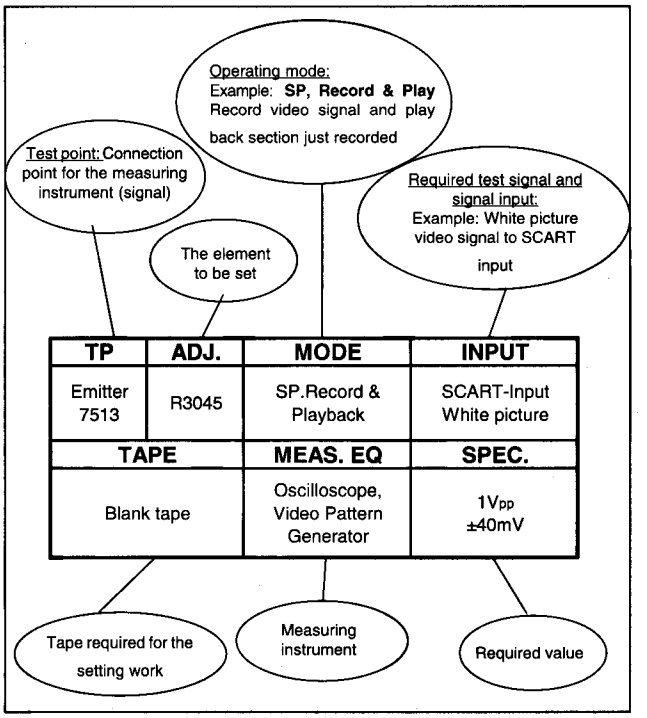

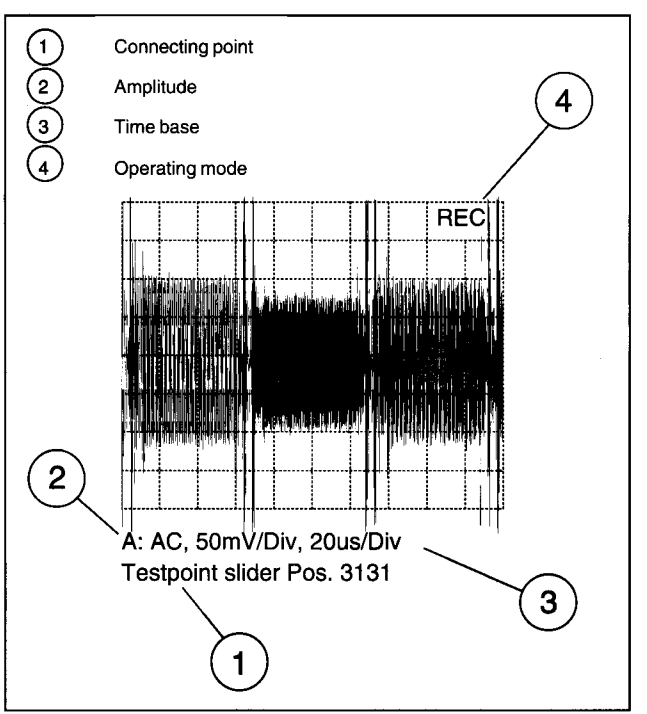

3. SETTINGS

The following settings are described below:

1. Power supply unit
2. Clock setting
3. Tuner 1
4. Tuner 2
5. Servo-system
6. Luminance and chrominance
7. Audio part
8. TV and picture tube part

3.1 Power supply unit (PS)

3.1.1 UBAT [R3348]

Purpose: Ensure correct functioning

Consequences of incorrect settings:
The correct functioning of the TV and VCR is not guaranteed.

TP	ADJ.	MODE	INPUT
C2353	R3348	Mains switch ON	SCART-Input No signal
TAPE		**MEAS. EQ**	**SPEC.**
		Digital Voltmeter	14",20",21" = 95V 25" = 138V (see description below)

Note: C2353 and R3348 are located on the TVB-board (PS part)

PROCEDURE:

- Set potentiometer R3348 to the centre position.
- Switch the device to the SCART input; do not apply a signal.
- Set the brightness and contrast to minimum.
- Connect the multimeter to C2353.
- Set a voltage of 95V (for 14",20" and 21") or 138V (for 25") using the potentiometer R3348.
- After making the setting, reset the original brightness and contrast values.

3.2 Clock setting

Purpose: Precise setting of the clock

Consequences of incorrect settings:
The clock gains or loses time.

TP	ADJ.	MODE	INPUT
IC7970 Pin 7	Service Menu	Service Mode	No Input signal
TAPE		**MEAS. EQ**	**SPEC.**
		Frequ. Counter	See description below

Note: IC7970 is located on the RUB-board (CVB part)

PROCEDURE:

- Call up Service mode (press the "STOP" button on the remote control, then the "PLAY" button on the device, and hold down both buttons for approx. 5 seconds).
- Connect the frequency meter to IC 7970 pin 7 and measure the 1Hz signal to at least 6 decimal places
- In the Service menu, select the "SERVICE CONTROL" line using the "▼" button and press "▶".
- Select the "CLOCK ADJUSTMENT MENU " line using the "▼" button
- Use the number keys to enter the value measured and hold down the "OK" button for 5 seconds until "STORED" appears.

Note: The input can be cancelled by pressing the "MENU" button (Service menu is switched off). Pressing "MENU" again switches the Service menu back on

3.3 Tuner 1 (TV)

3.3.1 Automatic frequency control AFC1 [5707] (only for Stereo)

Purpose: Correct functioning of the demodulator switching.

Consequences of incorrect settings:
Poor or distorted reception in TV circuits

Preparation:
Connect pin 1 on tuner 1700/1701 to pin 10.

TP	ADJ.	MODE	INPUT
IC7720 Pin 17	L5707	TV	38,9MHz / 200mV$_{pp}$ on Pin 11 Tuner 1700/1701
TAPE		**MEAS. EQ**	**SPEC.**
		Digital Voltmeter, Frequ. Generator	2,5V ±0,2V

Note: IC7720 and L5707 are located on the TVB-board (TU1 part).

3.3.2 Automatic gain control AGC 1

Purpose: Set the automatic gain control

Consequences of incorrect settings:
If the input level is too low, the AGC synchronisation will not function correctly in the TV circuits. If the level is too high, the picture may be distorted.

TP	ADJ.	MODE	INPUT
Tuner 1700/1701 Pin 11	Service Menu	Service Mode	5mV (74dBµV) on aerial input channel 24 PAL-White picture no audio carrier
TAPE		**MEAS. EQ**	**SPEC.**
		Oscilloscope (10:1 Probe), Video Pattern Generator	550mV$_{pp}$ -1dB (See description below)

PROCEDURE:

- Call up Service mode (press the "STOP" button on the remote control, then the "PLAY" button on the device, and hold down both buttons for approx. 5 seconds).
- In the Service menu, use the "▼" button to select the "SERVICE CONTROL MENU" line and press "▶"
- Select the "TUNER 1 AGC" line using the "▼" button
- Use the "◀" and "▶" arrow buttons to set the level on the tuner output to 550 mV$_{pp}$ and hold down the "OK" button for approx. 5 seconds until "STORED" appears

Note: Tuner 1700/1701 is located on the TVB-board (TU1 part).

3.3.3 40.4 MHz suppression in tuner 1 [5701] (for SECAM only)

Purpose: Suppress residual band I carriers.

Consequences of incorrect settings:
Poor or distorted reception in TV circuits due to a weakening of the PAL picture carrier (38.9 MHz).

TP	ADJ.	MODE	INPUT
SAW 1708 Pin 1	L5701	TV	40,4MHz / 200mV$_{pp}$ on Pin 11 Tuner 1700/1701
TAPE		MEAS. EQ	SPEC.
		Oscilloscope (10:1 Probe), Frequ. Generator	Adjust to minimum amplitude

Note: SAW1708 and L5701 are located on the TVB-board (TU1 part).

3.3.4 Tuner 1 Type

Purpose: Set the tuner type used

Consequences of incorrect settings:
No reception in UHF range.

TP	ADJ.	MODE	INPUT
	Service Menu	Service Mode	5mV (74dBµV) on aerial input channel 40 (623MHz)
TAPE		MEAS. EQ	SPEC.
		Video Pattern Generator	See description below

PROCEDURE:
- In Manual Tuning Mode set channel 40 and save it under a program number.
- Call up Service Mode (press the "STOP" button on the remote control, then the "PLAY" button on the unit, and hold down both buttons for approx. 5 seconds).
- In the Service Menu, select the "SERVICE CONTROL MENU" line using the " ▼ " button and press " ▶ "
- Select the line "TUNER 1 TYPE" using the " ▼ " button.
- Use the arrow buttons " ◀ " and " ▶ " to switch between "PH" and "AL" and the position at which the test picture is displayed, save using the "OK" button (hold down for 5 secs.).

3.4 Tuner 2 (TU2)

3.4.1 Automatic frequency control AFC2 [5300]

Purpose: Correct functioning of the demodulator switching.

Consequences of incorrect settings:
Poor or distorted reception in VCR circuits

Preparation:
Connect pin 1 of tuner 1301 to pin 10.

TP	ADJ.	MODE	INPUT
IC7309 Pin 17	L5300	TV	38,9MHz / 200mV$_{pp}$ on Pin 11 Tuner 1301
TAPE		MEAS. EQ	SPEC.
		Digital Voltmeter, Frequ. Generator	2,5V ±0,2V

Note: IC7309 and L5300 are located on the RUB-board (TU2 part).

3.4.2 AFC 2 reference

Purpose: Adjust the synchronous operation of tuner 1 and tuner 2.

Consequences of incorrect settings:
Poor or distorted reception in TV or circuits.

Preparation:
Connect pin 1 of tuner 1301 to pin 10.

TP	ADJ.	MODE	INPUT
	Service Menu	Service Mode, PAL-Mode	38,9MHz / 200mV$_{pp}$ on Pin 11 Tuner 1301
TAPE		MEAS. EQ	SPEC.
		Frequ. Generator	See description below

PROCEDURE
- Call up Service mode (press the "STOP" button on the remote control, then the "PLAY" button on the device, and hold down both buttons for approx. 5 seconds).
- In the Service menu, use the " ▼ " button to select the "SERVICE CONTROL MENU" line and press " ▶ ".
- Use the " ▼ " button to select the "TUNER 2 AFC REF." line and press " ▶ ".

3.4.3 Automatic gain control AGC 2 [3307]

Purpose: Set the automatic gain control

Consequences of incorrect settings:
If the input level is too low, the AGC synchronisation will not function correctly in the VCR circuits. If the level is too high, the picture may be distorted.

TP	ADJ.	MODE	INPUT
Tuner 1301 Pin 11	R3307	TV	5mV (74dBµV) on aerial input channel 24 PAL-White picture no audio carrier
TAPE		MEAS. EQ	SPEC.
		Oscilloscope (10:1 Probe), Video Pattern Generator	550mV$_{pp}$ -1dB

Note: Tuner 1301 and R3307 are located on the RUB-board (TU2 part).

3.4.4 40.4 MHz suppression in tuner 2 [5301] (for SECAM only)

Purpose: Suppress residual band I carriers.

Consequences of incorrect settings:
Poor or distorted reception in VCR circuits due to a weakening of the PAL picture carrier (38.9 MHz)

TP	ADJ.	MODE	INPUT
SAW 1300 Pin 1	L5301	TV mode tuned to SECAM Bd I channel	40,4MHz / 200mV$_{pp}$ on Pin 11 Tuner 1301
TAPE		**MEAS. EQ**	**SPEC.**
		Oscilloscope (10:1 Probe), Frequ. Generator	Adjust to minimum amplitude

Note: SAW1300 and L5301 are located on the RUB-board (TU2 part).

3.4.5 Tuner 2 Type

Purpose: Set the tuner type used

Consequences of incorrect settings:
No reception in UHF range.

TP	ADJ.	MODE	INPUT
	Service Menu	Service Mode	5mV (74dBµV) on aerial input channel 40 (623MHz)
TAPE		**MEAS. EQ**	**SPEC.**
		Video Pattern Generator	See description below

PROCEDURE:
- In Manual Tuning Mode set channel 40 and save it under a program number.
- Call up Service Mode (press the "STOP" button on the remote control, then the "PLAY" button on the unit, and hold down both buttons for approx. 5 seconds).
- In the Service Menu, select the "SERVICE CONTROL MENU" line using the " ▼ " button and press " ▶ "
- Select the line "TUNER 2 TYPE" using the " ▼ " button.
- Use the arrow buttons " ◀ " and " ▶ " to switch between "PH" and "AL" and the position at which the test picture is displayed, save using the "OK" button (hold down for 5 secs.).

3.5 SERVO-SYSTEM (DE)

3.5.1 Gap position

Purpose: Ensure correct head changeover during playback.

Consequences of incorrect settings:
Poor head changeover, changeover visible in picture, or picture fluctuations.

TP	ADJ.	MODE	INPUT
	Service Menu	Service Mode, Playback	
TAPE		**MEAS. EQ**	**SPEC.**
VHS Alignment Tape 4822 397 30103			See description below

PROCEDURE
- Call up Service mode (press the "STOP" button on the remote control, then the "PLAY" button on the device, and hold down both buttons for approx. 5 seconds).
- In the Service menu, use the " ▼ " button to select the "SERVICE CONTROL MENU" line and press " ▶ ".
- Use the " ▼ " button to select the "GAP POSITION" line. Play back the VHS test cassette (4822 397 30103) and press " ▶ "

The setting is made automatically and the corresponding values are stored in the EEPROM.
The device switches to STOP after the setting has been made.
If the setting has not been completed correctly, the device ejects the cassette.

Possible causes:
Poor video signal.
Head disc is defective.
µP defective.

3.6 Luminance and chrominance (VS,VSEC)

3.6.1 SECAM recording current [R3086]

Purpose: Ensure optimal chrominance level during recording.

Consequences of incorrect settings:
If the chroma level is too high during recording, cross patterns may appear in coloured areas.
If the level is too low, colour noise interference may occur.

TP	ADJ.	MODE	INPUT
C2077/ R3100	R3086	Record	SECAM-Red picture (75% Saturation) on SCART
TAPE		**MEAS. EQ**	**SPEC.**
Blank Tape		Oscilloscope, Video Pattern Generator	**A**=100mV$_{pp}$ ±10mV (see Fig. E4)

Notes: With varying frame amplitudes, the setting is made for the greatest amplitude.R3086 is located on the RUB-board (VSEC part).

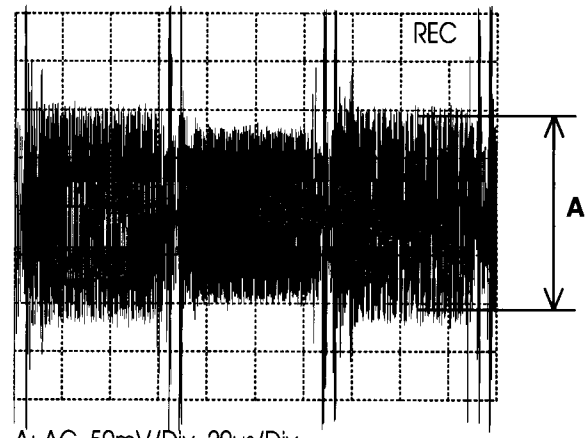

Fig. E4

3.6.2 3.3MHz adjustment [R3089] (only for SECAM)

Purpose: To adjust the mixing oscillator

Consequences of incorrect settings:
Cross patterns in coloured areas, coloured noise.

TP	ADJ.	MODE	INPUT
	R3089	SP. Record & Playback	SECAM-Red picture (75% Saturation) on SCART
TAPE		**MEAS. EQ**	**SPEC.**
Blank Tape		Video Pattern Generator	See description below

PROCEDURE:
- Play back red image recorded.
- Use R3089 to set the interference to a minimum level.

Note: R3089 is located on the RUB board (VSEC part).

3.6.3 Studio picture control SPC

Purpose: Set the reference level for the SPC.

Consequences of incorrect settings:
Resolution too low or "strays" during playback.

TP	ADJ.	MODE	INPUT
	Service Menu	Service Mode, Stop	PAL-Black picture on SCART
TAPE		**MEAS. EQ**	**SPEC.**
SPC-Alignment Tape 4822 397 30268		Video Pattern Generator	See description below

PROCEDURE
- Call up Service mode (press the "STOP" button on the remote control, then the "PLAY" button on the device, and hold down both buttons for approx. 5 seconds).
- In the Service menu, use the "▼" button to select the "SERVICE CONTROL MENU" line and press "▶".
- Use the "▼" button to select the "SPC ADJUSTMENT" line.
- Play back the VHS test cassette (4822 397 30268) and press "▶"

The setting is made automatically and the corresponding values are stored in the EEPROM.
The device switches to STOP after the setting has been made.
If the setting has not been completed correctly, the device ejects the cassette.

Possible causes:
Poor video signal.
Head disc is defective.
µP defective.

3.7 Audio part

3.7.1 Erase frequency

Purpose: Set optimal erase frequency.

Consequences of incorrect settings:
Erase frequency or harmonic waves may cause interference.

TP	ADJ.	MODE	INPUT
Connector 1961 Pin1	L5602	Record	PAL-White picture with audio on SCART
TAPE		**MEAS. EQ**	**SPEC.**
Blank Tape		Frequ. Counter Video Pattern Generator	70kHz ±10kHz

Note: Connector 1961 and L5602 are located on the RUB-board (AL part).

3.7.2 BIAS magnetic biasing current [R3630]

Purpose: Set optimal magnetic biasing current.

Consequences of incorrect settings:
If the level is too high, the treble response in the linear tone is too low. If the level is too low, the treble response is too great, and the harmonic distortion is increased.

TP	ADJ.	MODE	INPUT
R3629	R3630	Record	PAL-White picture with audio on SCART
TAPE		**MEAS. EQ**	**SPEC.**
Blank Tape		AC-Millivoltmeter, Video Pattern Generator	16mV$_{RMS}$ ±1mV (see description below)

Note: R3629 and R3630 are located on the RUB-board (AL part).

Checking the magnetic biasing current setting:
Apply a sine-wave signal with an amplitude of 50mVeff to the SCART audio input. Record the 1kHz signal and 10kHz signal for 30 seconds each. Play back the recording and check that the amplitude difference is in the ±3dB range. If this is not the case, correct the value for the magnetic biasing current. If the treble is too low, the bias current should be reduced slightly. If the distortion is too great, the bias current should be increased slightly.
(approximate value: +1mV = -1dB Treble).

3.7.3 Audio playback level

Purpose: Ensure a uniform level for recording and playback.

Consequences of incorrect settings:
Level fluctuations during playback.

STEREO sets

TP	ADJ.	MODE	INPUT
Pin 1 SCART (AudOutR)	Service Menu	SP. Record & Playback	PAL-White picture 500mV$_{RMS}$/1kHz on Pin 2 and 4 SCART
TAPE		**MEAS. EQ**	**SPEC.**
Blank Tape		AC-Millivoltmeter, Video Pattern Generator	500mV$_{RMS}$ ±50mV (see description below)

PROCEDURE:
- Play back the 1kHz sine-wave signal recorded.
- Call up Service mode (press the "STOP" button on the remote control, then the "PLAY" button on the device, and hold down both buttons for approx. 5 seconds).
- In the Service menu, use the "▼" button to select the "SERVICE CONTROL MENU" line and press "▶".
- Use the "▼" button to select the "AUDIO LIN. PLAYBACK" line.
- Switch over to mono using the "AUDIO" button.
- Use the arrow buttons "◀" and "▶" to set the audio level on the SCART output to 500mVRMS and hold down the "OK" button for 5 seconds until "STORED" appears.

Note: The input can be cancelled by pressing the "MENU" button (Service menu is switched off). Pressing "MENU" again switches the Service menu back on.

MONO sets

TP	ADJ.	MODE	INPUT
Pin 1 SCART (AudOutR)	R3638	SP. Record & Playback	PAL-White picture 500mV$_{RMS}$/1kHz on Pin 2 and 4 SCART
TAPE		**MEAS. EQ**	**SPEC.**
Blank Tape		AC-Millivoltmeter, Video Pattern Generator	500mV$_{RMS}$ ±50mV

Note: R3638 is located on the RUB-board (AL part).

3.8 TV and picture tube settings (TV, LS)

Preparation:

- Demagnetise the picture tube (connect the device – cooled to room temperature – to the mains).
- Allow the device to warm up for around 15 minutes.
- Set up the screen to face eastwards
- ABS Loop ON (Service menu)
  Switch "CONTRAST PLUS" in the "PICTURE" menu to "OFF".

3.8.1 Cut-off

Purpose: Set the operating point setting for ABS Loop

Consequences of incorrect settings:
Incorrect colour temperature with a dark picture. White peak missing.

TP	ADJ.	MODE	INPUT
Conn. 1955 Pins 6,8,11 Conn. 1958 Pins 3,7,9	SCREEN on Line transf.	TV	PAL-Black picture with Burst on SCART
TAPE		**MEAS. EQ**	**SPEC.**
		Digital Voltmeter, Video Pattern Generator	14" = 140V 20,21,25" = 150V (see description below)

PROCEDURE:
- Call up Service mode (press the "STOP" button on the remote control, then the "PLAY" button on the device, and hold down both buttons for approx. 5 seconds).
- In the Service menu, use the "▼" button to select the "SERVICE CONTROL MENU" line and press "▶".
- Use the "▼" button to select the "TV DEFAULT VALUES" line and press "OK".
- Increase the brightness so that the black picture becomes slightly brighter.
- On the picture tube connector 1958 on the R,G,B pins 8,6 and 11 (for 20",21" and 25") or 1955 pins 3,7 and 9 (for 14") (see square contact surfaces) as certain the cathode connection to which the greatest voltage is being applied.
- Set the cathode (with the highest voltage) to 140V (for 14") or 150V (for 20,21,25") using the SCREEN controller on the line transformer.
  Remark: SCREEN is the lower controller on the transformer.

3.8.2 Focus

Purpose: Ensure optimal picture sharpness.

Consequences of incorrect settings:
Blurred picture

TP	ADJ.	MODE	INPUT
	FOCUS on Line Transf.	TV	Crosshatch pattern on SCART
TAPE		**MEAS. EQ**	**SPEC.**
		Video Pattern Generator	Best picture sharpness

Note: Before adjustment, set the sharpness in the "PICTURE" menu to the centre value. Remark: FOCUS is the upper controller on the transformer.

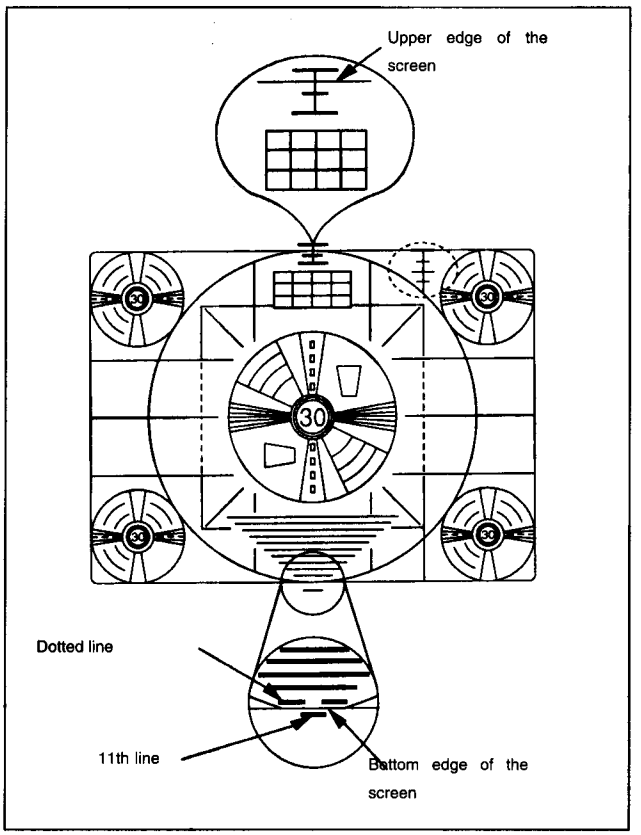

Fig. E5

3.8.3 Horizontal picture position

Purpose: Ensure correct horizontal picture position

Consequences of incorrect settings:
Missing picture information on the edge of the screen

TP	ADJ.	MODE	INPUT
	Service Menu	Service Mode, Playback	
TAPE		**MEAS. EQ**	**SPEC.**
VHS-Alignment Tape 4822 397 30103			See description below (and Fig. E5)

PROCEDURE:
- Call up Service mode (press the "STOP" button on the remote control, then the "PLAY" button on the device, and hold down both buttons for approx. 5 seconds).
- In the Service menu, use the "▼" button to select the "SERVICE CONTROL MENU" line and press "▶".
- Use the "▼" button to select the "TV ADJUSTMENTS" line and press "OK".
- Start the playback
- Use the arrow buttons "◀" and "▶" to position the test picture precisely in the centre of the screen (left and right-hand corners are of equal size).
  Hold down the "OK" button for 5 seconds until "STORED" appears.

Note: The input can be cancelled by pressing the "MENU" button (Service menu is switched off). Pressing "MENU" again switches the Service menu back on.

3.8.4 Vertical picture position, picture amplitude and slope

Purpose: Set optimal vertical picture size and position

Consequences of incorrect settings:
Missing picture information on the edge of the screen, or a distorted picture.

TP	ADJ.	MODE	INPUT
	Service Menu	Service Mode, Playback	
TAPE		**MEAS. EQ**	**SPEC.**
VHS-Alignment Tape 4822 397 30103			See description below (and Fig. E5)

PROCEDURE:
- Call up Service mode (press the "STOP" button on the remote control, then the "PLAY" button on the device, and hold down both buttons for approx. 5 seconds).
- In the Service menu, use the "▼" button to select the "SERVICE CONTROL MENU" line and press "▶".
- Use the "▼" button to select the "TV ADJUSTMENTS" line and press "OK".
- Start the playback

1) Slope
- Press the "▼" button several times until "VERTICAL SLOPE" appears (the bottom half of the picture is blanked).
- Use the arrow keys "◀" and "▶" to set the middle line of the test picture precisely in the centre of the vertical screen.
- Hold down the "OK" button for 5 seconds until "STORED" appears.

2) Picture position
- Press the "▼" button several times until "VERTICAL SHIFT" appears.
- Use the arrow keys "◀" and "▶" to adjust the test picture in the vertical middle of the screen.
- Hold down the "OK" button for 5 seconds until "STORED" appears.

3) Picture amplitude
- Press the "▼" button several times until "VERTICAL AMPLITUDE" appears (the bottom half of the picture is blanked).
- Use the arrow keys "◀" and "▶" to set the bottom and the top edge of the circular test picture according to figure E5.
- Hold down the "OK" button for 5 seconds until "STORED" appears.

Note: The input can be cancelled by pressing the "MENU" button (Service menu is switched off). Pressing "MENU" again switches the Service menu back on.

3.8.5 East/West adjustments (for 25"only)

Purpose: Set optimal horizontal picture size and position

Consequences of incorrect settings:
Missing picture information on the edge of the screen, or a distorted picture.

PROCEDURE:
- Call up Service mode (press the "STOP" button on the remote control, then the "PLAY" button on the device, and hold down both buttons for approx. 5 seconds).
- In the Service menu, use the "▼" button to select the "SERVICE CONTROL MENU" line and press "▶".
- Use the "▼" button to select the "TV ADJUSTMENTS" line and press "OK".

1) East/West-width

TP	ADJ.	MODE	INPUT
	Service Menu	Service Mode, Playback	
TAPE		MEAS. EQ	SPEC.
VHS-Alignment Tape 4822 397 30103			See description below (and Fig. E5)

- Press the "▼" button several times until "E/W WIDTH" appears.
- Start the playback
- Use the arrow keys "◄" and "►" to adjust the test picture in the horizontal middle of the screen.
- Hold down the "OK" button for 5 seconds until "STORED" appears.

2) East/West-parabola

TP	ADJ.	MODE	INPUT
	Service Menu	TV	Crosshatch pattern on SCART
TAPE		MEAS. EQ	SPEC.
		Video Pattern Generator	See description below

- Activate TV-mode and apply a crosshatch pattern testpicture to the SCART input.
- Press the "▼" button several times until "E/W PARABOLA" appears.
- Use the arrow keys "◄" and "►" to adjust the left and right hand vertical lines to minimum distortions (see Fig. E6).
- Hold down the "OK" button for 5 seconds until "STORED" appears.

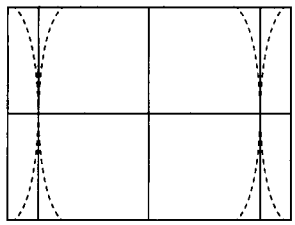

Fig. E6

3) East/West corner parabola

- Activate TV-mode and apply a crosshatch pattern testpicture to the SCART input.
- Press the "▼" button several times until "E/W CORNER" appears.
- Use the arrow keys "◄" and "►" to adjust the corners to minimum distortions (see Fig. E7).
- Hold down the "OK" button for 5 seconds until "STORED" appears.

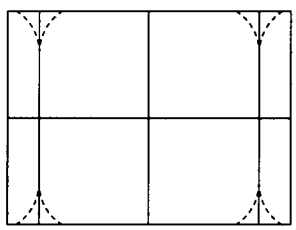

Fig. E7

4) East/West trapezium

- Activate TV-mode and apply a crosshatch pattern testpicture to the SCART input.
- Press the "▼" button several times until "E/W TRAPEZIUM" appears.
- Use the arrow keys "◄" and "►" to adjust the left and right hand vertical lines parallel to the screen edge (see Fig. E8)
- Hold down the "OK" button for 5 seconds until "STORED" appears.

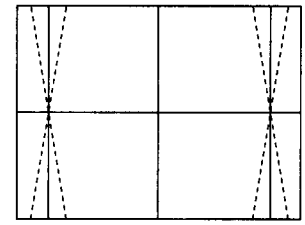

Fig. E8

3.8.6 Adjusting the whiteness

Purpose: Setting the R,G,B cathode ray currents

Consequences of incorrect settings:
Incorrect depiction of colours.

TP	ADJ.	MODE	INPUT
	Service Menu	TV	PAL-Black/White picture on SCART
TAPE		MEAS. EQ	SPEC.
		Video Pattern Generator	See description below

PROCEDURE:

- Adjust the "SMART PICTURE" picture setting to "NATURAL" using the "SMART ▭" button.
- Set the tint in the "PICTURE" menu to "NATURAL".
- Call up Service mode (press the "STOP" button on the remote control, then the "PLAY" button on the device, and hold down both buttons for approx. 5 seconds).
- In the Service menu, use the "▼" button to select the "SERVICE CONTROL MENU" line and press "►".
- Use the "▼" button to select the "TV ADJUSTMENTS" line and press "OK".
- Press the "▼" button several times until "BLUE" appears.
- Use the "◄" and "►" arrow buttons to set the blue level required and hold down the "OK" button for 5 seconds until "STORED" appears.
- Press the "▼" button until "RED" appears.
- Use the "◄" and "►" arrow buttons to set the red level required and hold down the "OK" button for 5 seconds until "STORED" appears.
- If necessary, press the "▼" button several times until "BLUE" or "RED" appears, and repeat the adjustment.

Note: The setting for the green cathode "GREEN" should not be changed if possible.

INTERCONNECTION WIRING DIAGRAM

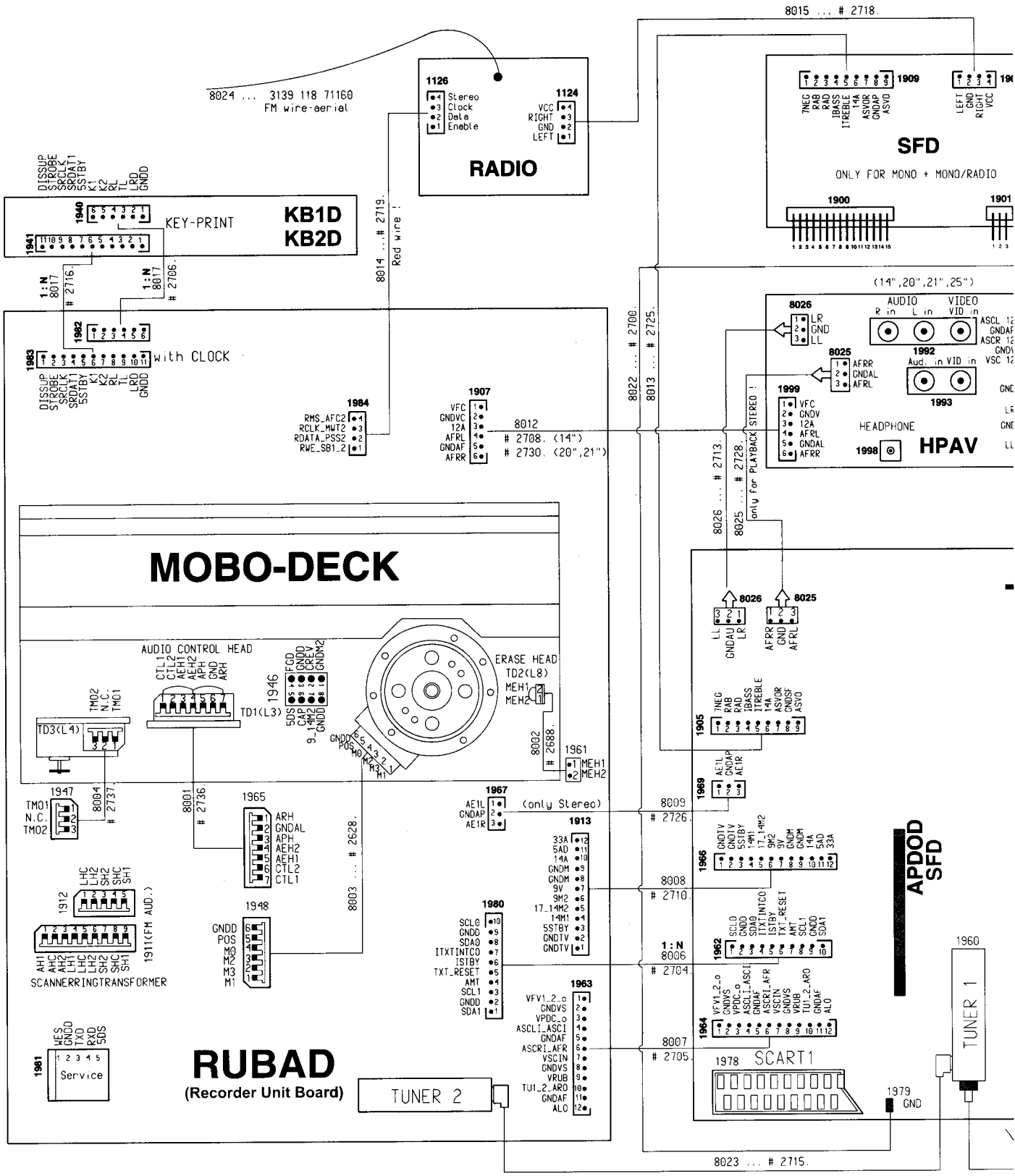

	Interconnections														
Circuit	ACO	AF	AF2	AIO1	AIO2	AL	AMP	AP	COTV	CVB	DE	DOSCD	HA	HPAV	IO_1
page	3-29	3-22	3-30	3-16	3-17	3-23	3-13	3-21	3-14	3-19	3-18	3-32	3-26	3-27	3-11
Circuit	KB1D	KB2D	LS	MFSWD	PS (RUB)	PS (TVB)	PT	SF	SFD	TU1	TU2	TV	VS	VSEC	
page	3-33	3-34	3-8	3-34	3-15	3-7	3-28	3-12	3-31	3-9	3-20	3-10	3-24	3-25	

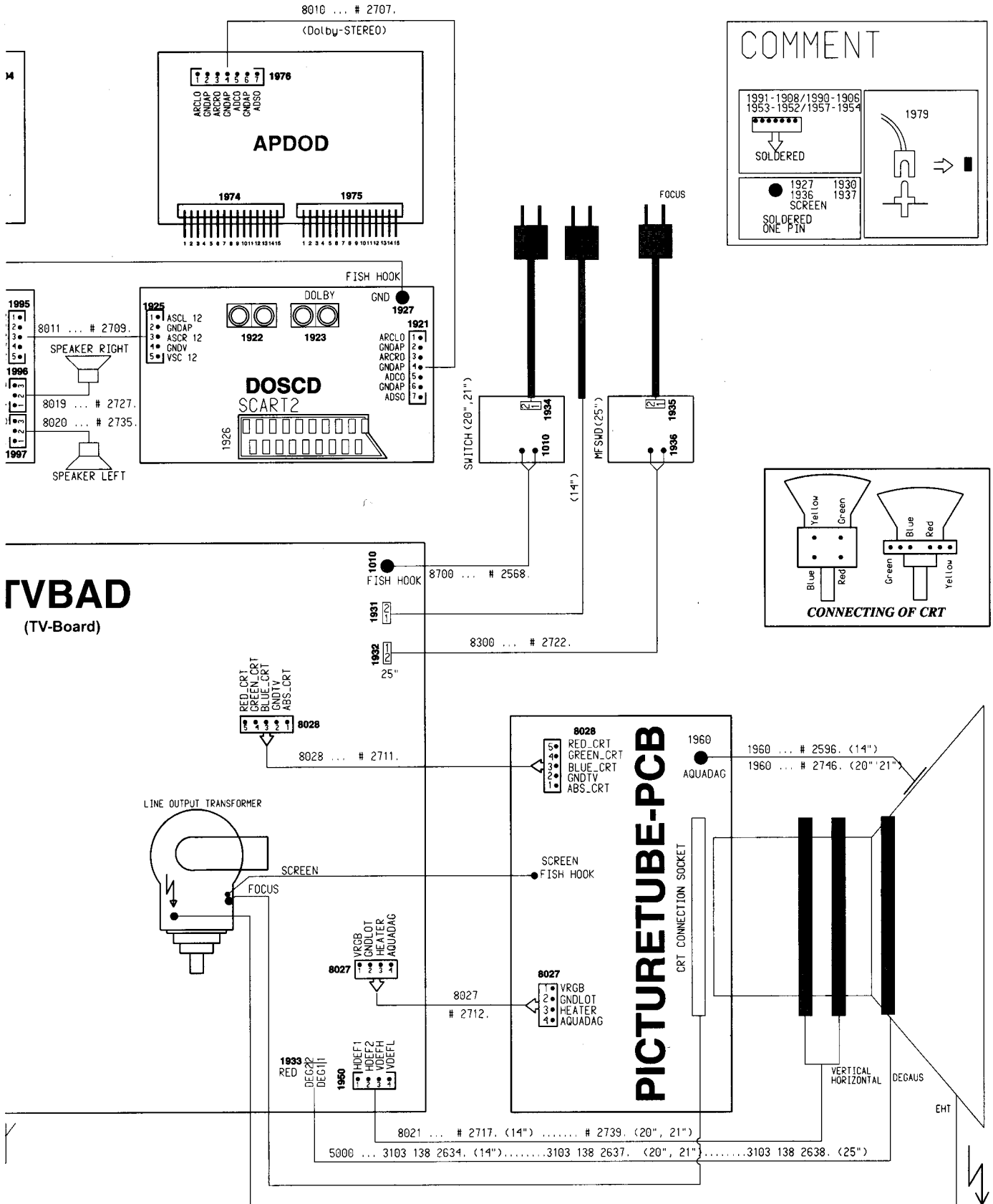
8010 ... # 2707.
(Dolby-STEREO)
1976
ARCLO GNDAP ARCRO GNDAP ADCO GNDAP ADSO
APDOD
1974
1975
COMMENT
1991-1908/1990-1906
1953-1952/1957-1954
SOLDERED
1979
1927 1930
1936 1937
SCREEN
SOLDERED ONE PIN
FOCUS
FISH HOOK
DOLBY
GND
1927
1995
8011 ... # 2709.
SPEAKER RIGHT
1996
8019 ... # 2727.
8020 ... # 2735.
1997
SPEAKER LEFT
1925
ASCL 12
GNDAP
ASCR 12
GNDV
VSC 12
1922
1923
1921
ARCLO
GNDAP
ARCRO
GNDAP
ADCO
GNDAP
ADSO
DOSCD
SCART2
1926
SWITCH (20",21")
1934
1010
MFSWD (25")
1935
1936
(14")
CONNECTING OF CRT
Yellow
Green
Blue
Red
Blue
Red
Green
Yellow
TVBAD
(TV-Board)
1010
FISH HOOK
8700 ... # 2568.
1931
1932
25"
8300 ... # 2722.
RED_CRT
GREEN_CRT
BLUE_CRT
GNDTV
ABS_CRT
8028
8028 ... # 2711.
8028
RED_CRT
GREEN_CRT
BLUE_CRT
GNDTV
ABS_CRT
PICTURETUBE-PCB
1960
AQUADAG
1960 ... # 2596. (14")
1960 ... # 2746. (20" 21")
CRT CONNECTION SOCKET
LINE OUTPUT TRANSFORMER
SCREEN
FOCUS
SCREEN
FISH HOOK
VRGB
GNDLOT
HEATER
AQUADAG
8027
8027
2712.
8027
VRGB
GNDLOT
HEATER
AQUADAG
1933
RED
DEG22
DEG11
1950
HDEF1
HDEF2
VDEFH
VDEFL
VERTICAL
HORIZONTAL
DEGAUS
EHT
8021 ... # 2717. (14") ..... # 2739. (20", 21")
5000 ... 3103 138 2634. (14").....3103 138 2637. (20", 21").....3103 138 2638. (25")

TUNER 1 AND TV - BLOCK DIAGRAM

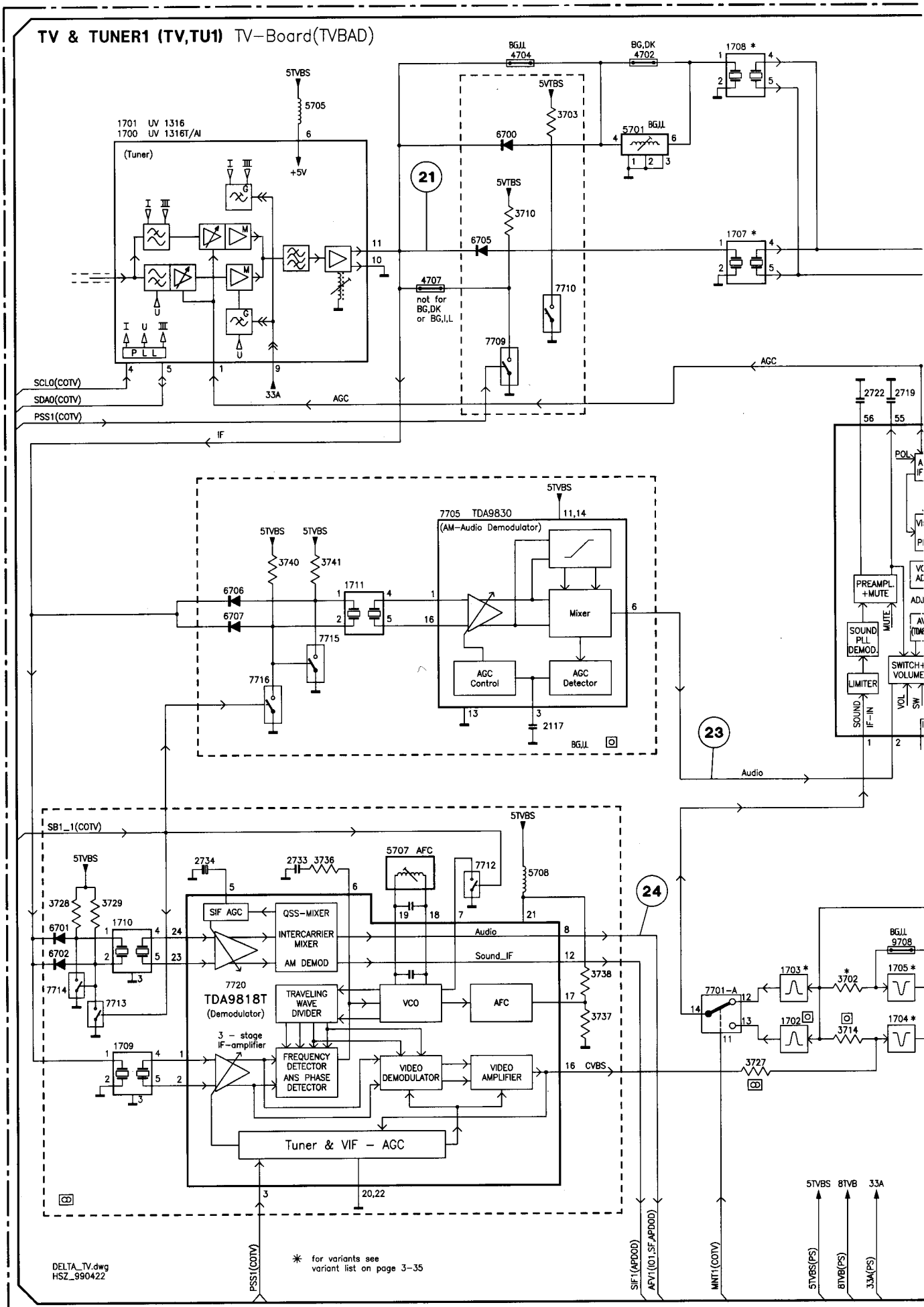

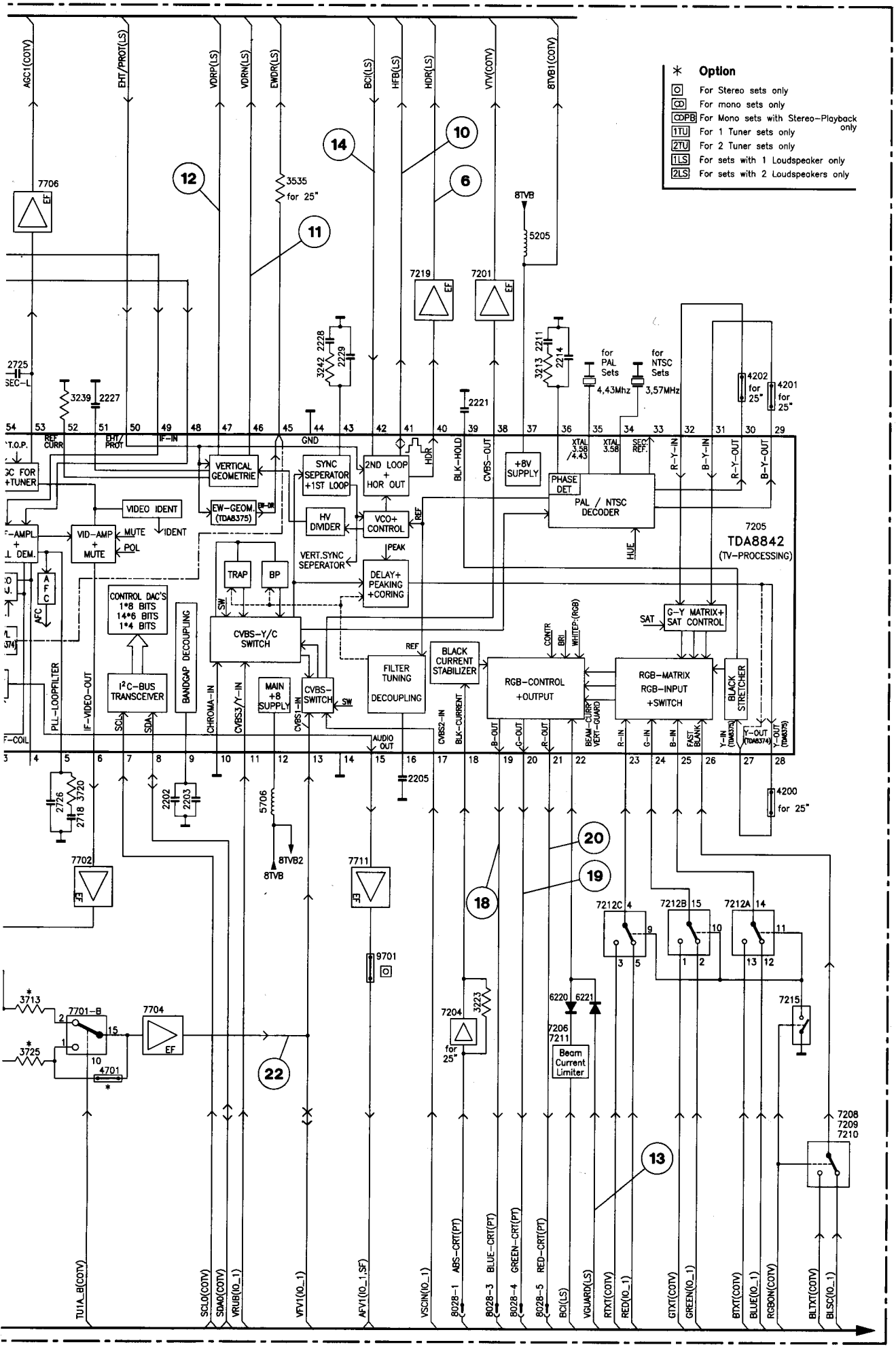

* Option
For Stereo sets only
For mono sets only
For Mono sets with Stereo-Playback only
For 1 Tuner sets only
For 2 Tuner sets only
For sets with 1 Loudspeaker only
For sets with 2 Loudspeakers only
7205
TDA8842
(TV-PROCESSING)
VERTICAL GEOMETRIE
SYNC SEPERATOR +1ST LOOP
2ND LOOP + HOR OUT
+8V SUPPLY
PHASE DET
PAL / NTSC DECODER
VIDEO IDENT
EW-GEOM. (TDA8375)
HV DIVIDER
VCO+ CONTROL
VID-AMP + MUTE
TRAP
BP
VERT.SYNC SEPERATOR
DELAY+ PEAKING +CORING
CONTROL DAC'S 1*8 BITS 14*6 BITS 1*4 BITS
BANDGAP DECOUPLING
CVBS-Y/C SWITCH
I²C-BUS TRANSCEIVER
MAIN +8 SUPPLY
CVBS-SWITCH
FILTER TUNING DECOUPLING
BLACK CURRENT STABILIZER
RGB-CONTROL +OUTPUT
RGB-MATRIX RGB-INPUT +SWITCH
G-Y MATRIX+ SAT CONTROL
BLACK STRETCHER
Beam Current Limiter
7706
7219
7201
7702
7711
7704
7701-B
7204
7212C
7212B
7212A
7215
7208
7209
7210
8TVB
8TVB2
AGC1(COTV)
EHT/PROT(LS)
VDRP(LS)
VDRN(LS)
EWDR(LS)
BCI(LS)
HFB(LS)
HDR(LS)
VTV(COTV)
8TVB1(COTV)
TU1A_B(COTV)
SCL0(COTV)
SDA0(COTV)
VRUB(IO_1)
VFV1(IO_1)
AFV1(IO_1,SF)
VSCIN(IO_1)
8028-1 ABS-CRT(PT)
8028-3 BLUE-CRT(PT)
8028-4 GREEN-CRT(PT)
8028-5 RED-CRT(PT)
BCI(LS)
VGUARD(LS)
RTXT(COTV)
RED(IO_1)
GTXT(COTV)
GREEN(IO_1)
BTXT(COTV)
BLUE(IO_1)
RGBON(COTV)
BLTXT(COTV)
BLSC(IO_1)

POWER SUPPLY, LARGE SIGNAL AND TXT - BLOCK DIAGR

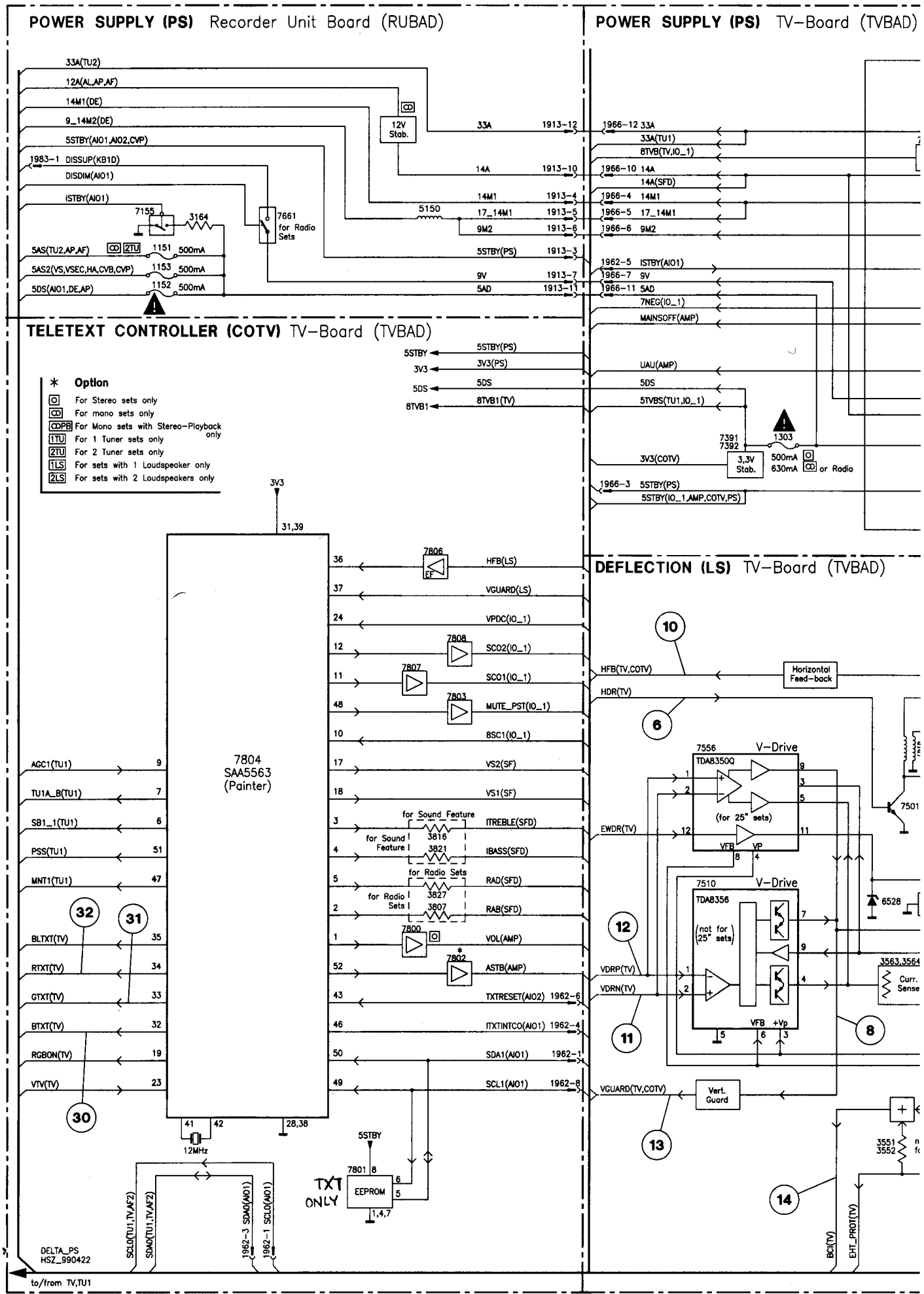

AM

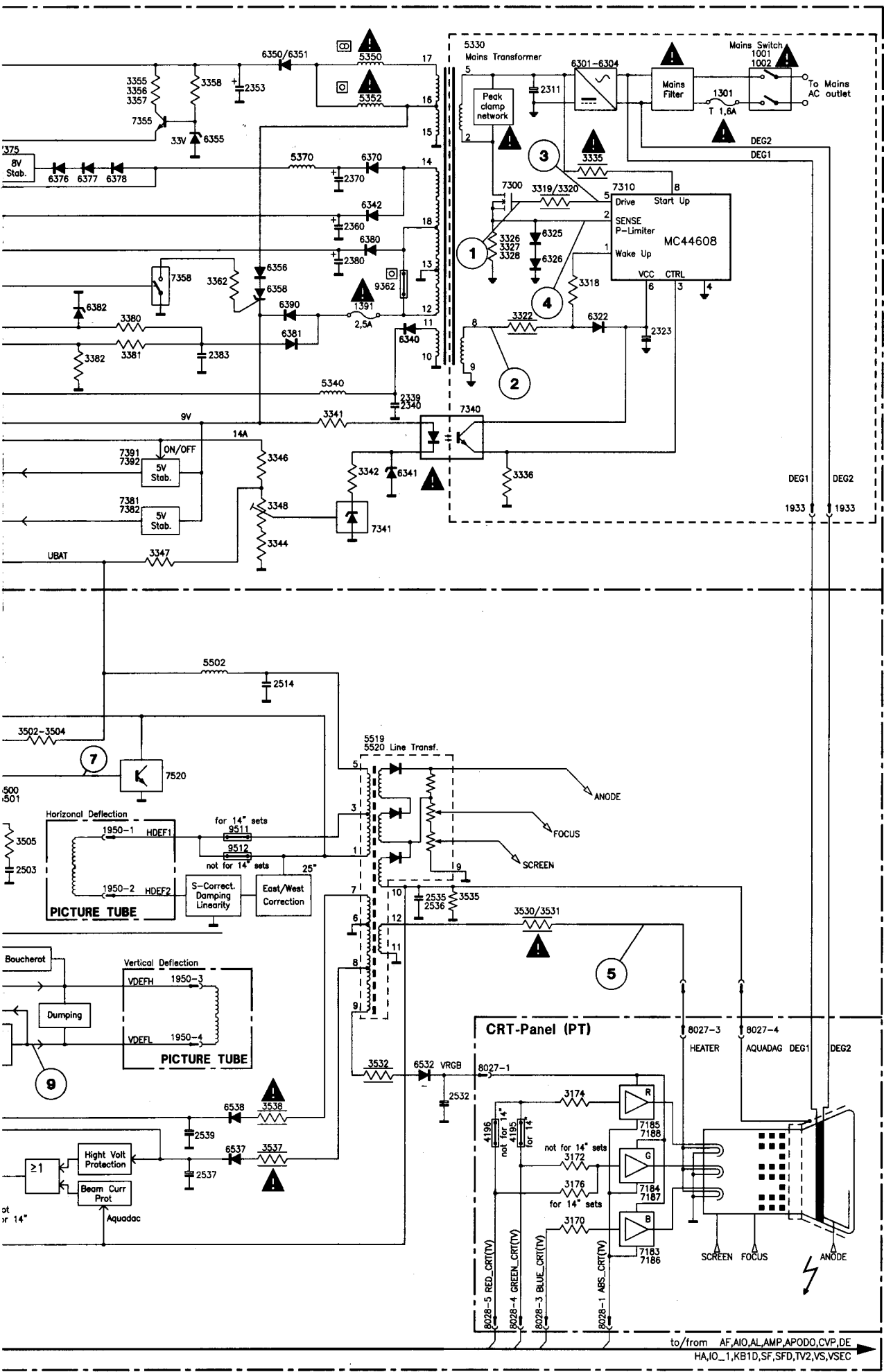
5330
Mains Transformer
Peak clamp network
6301-6304
Mains Filter
Mains Switch
1001
1002
To Mains AC outlet
1301
T 1,6A
DEG2
DEG1
7310
Drive
Start Up
SENSE
P-Limiter
Wake Up
MC44608
VCC
CTRL
7300
3319/3320
3335
3326
3327
3328
6325
6326
3318
3322
6322
2323
6350/6351
5350
5352
3355
3356
3357
3358
2353
7355
33V
6355
8V Stab.
6376
6377
6378
5370
6370
2370
6342
2360
6380
2380
6356
6358
7358
3362
6382
3380
3381
3382
2383
6390
6381
9362
1391
2,5A
6340
5340
2339
2340
9V
3341
7340
14A
ON/OFF
7391
7392
5V Stab.
7381
7382
5V Stab.
3346
3348
3344
3342
6341
7341
3336
UBAT
3347
1933
5502
2514
3502-3504
7520
5519
5520 Line Transf.
ANODE
FOCUS
SCREEN
Horizonal Deflection
1950-1
HDEF1
1950-2
HDEF2
for 14" sets
9511
9512
not for 14" sets
25"
S-Correct. Damping Linearity
East/West Correction
PICTURE TUBE
3505
2503
2535
2536
3535
3530/3531
Boucherot
Vertical Deflection
VDEFH
1950-3
VDEFL
1950-4
Dumping
PICTURE TUBE
CRT-Panel (PT)
8027-3
HEATER
8027-4
AQUADAG
DEG1
DEG2
3532
6532
VRGB
8027-1
2532
3174
R
7185
7188
4196
not for 14"
4195
for 14"
not for 14" sets
3172
G
7184
7187
3176
for 14" sets
3170
B
7183
7186
SCREEN
FOCUS
ANODE
6538
3538
2539
6537
3537
2537
Hight Volt Protection
Beam Curr Prot
Aquadac
8028-5 RED_CRT(TV)
8028-4 GREEN_CRT(TV)
8028-3 BLUE_CRT(TV)
8028-1 ABS_CRT(TV)
to/from AF,AIO,AL,AMP,APODO,CVP,DE
HA,IO_1,KB1D,SF,SFD,TV2,VS,VSEC

IN/OUT AND AUDIO PROCESSING - BLOCK DIAGRAM

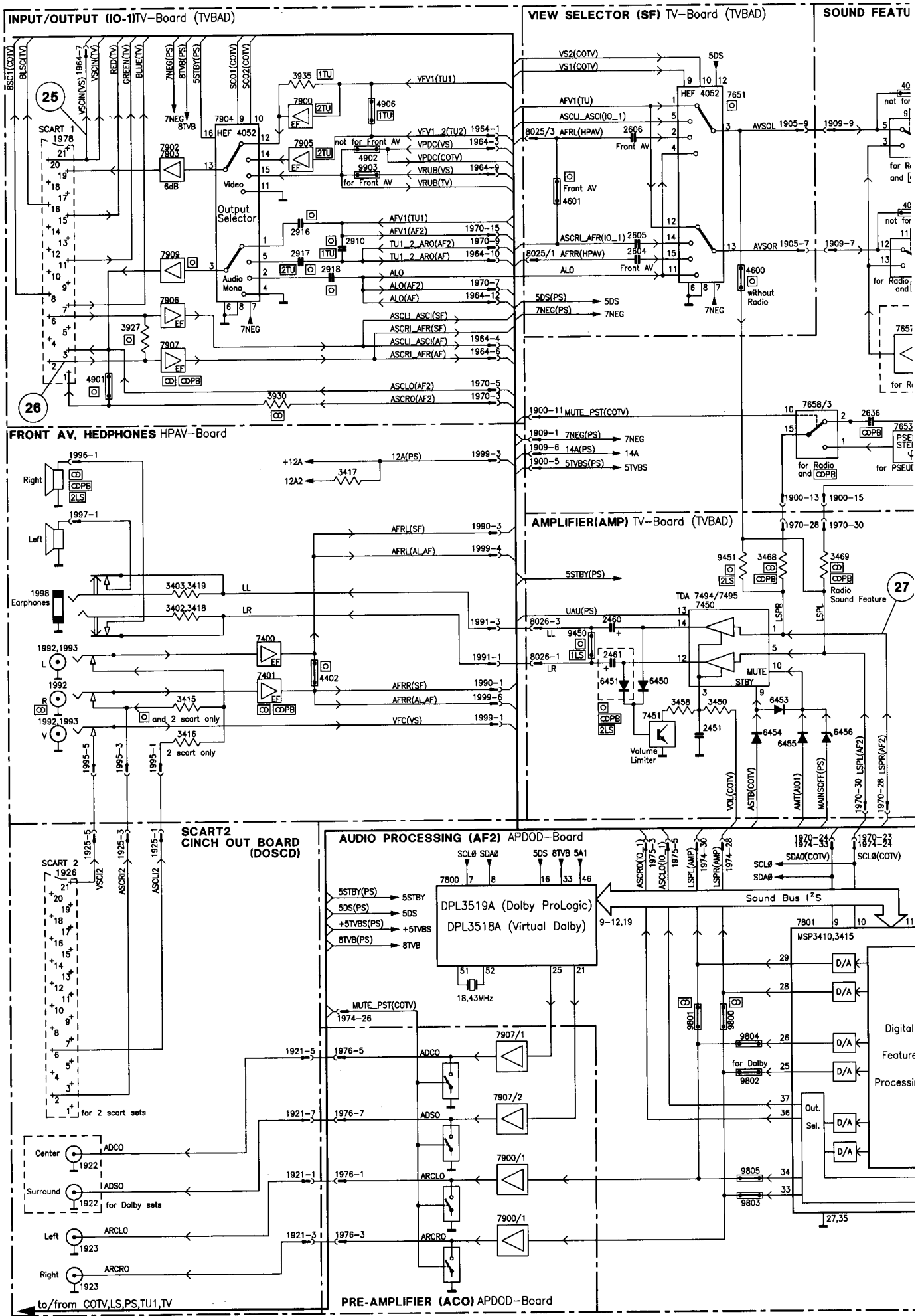

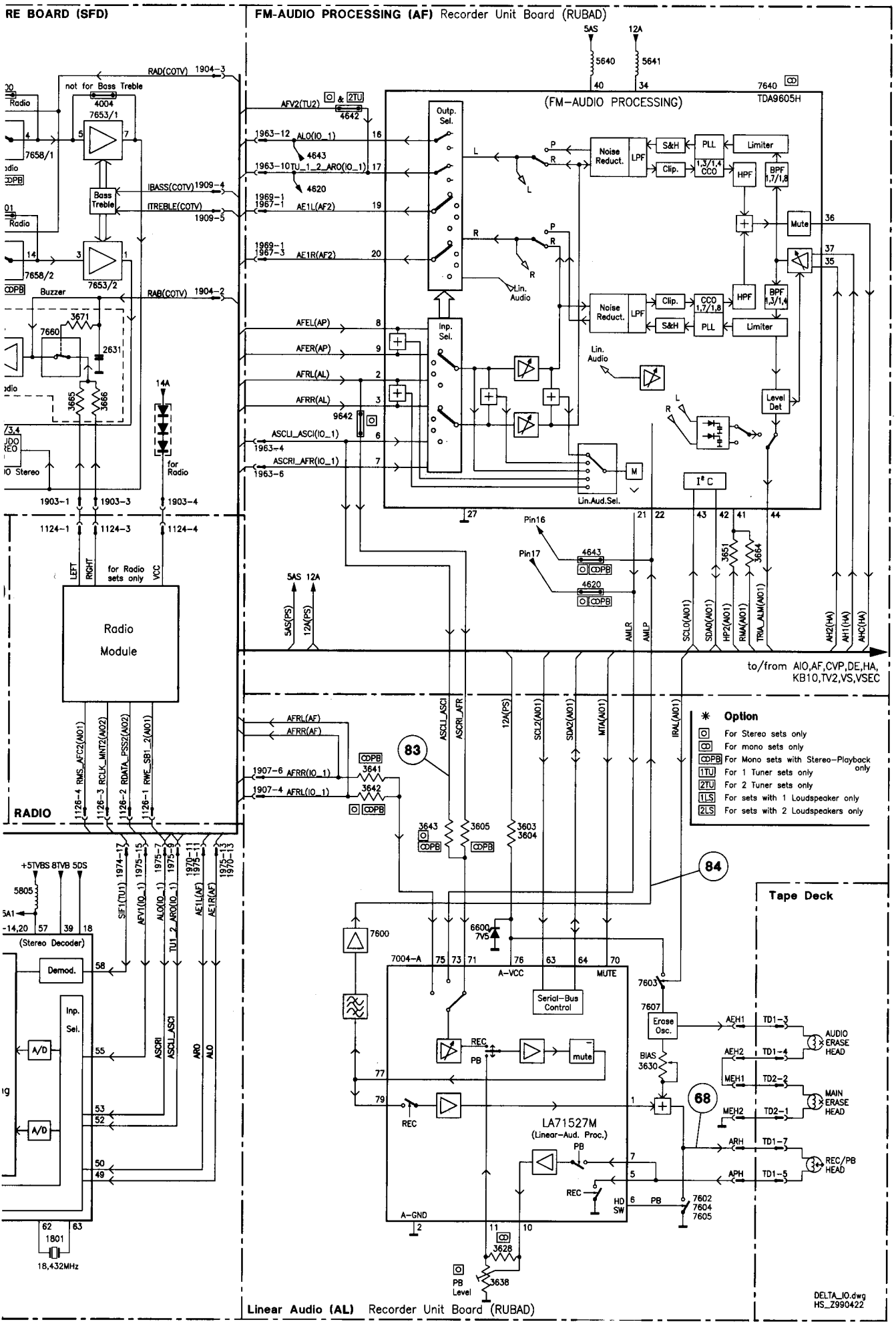
RE BOARD (SFD)
FM-AUDIO PROCESSING (AF) Recorder Unit Board (RUBAD)
(FM-AUDIO PROCESSING)
TDA9605H
Radio Module
RADIO
Tape Deck
LA71527M
(Linear-Aud. Proc.)
(Stereo Decoder)
Linear Audio (AL) Recorder Unit Board (RUBAD)
to/from AIO,AF,CVP,DE,HA, KB10,TV2,VS,VSEC
Option
For Stereo sets only
For mono sets only
For Mono sets with Stereo-Playback only
For 1 Tuner sets only
For 2 Tuner sets only
For sets with 1 Loudspeaker only
For sets with 2 Loudspeakers only
not for Bass Treble
Bass Treble
Buzzer
for Radio
for Radio sets only
Noise Reduct.
Clip.
PLL
Limiter
HPF
BPF
Mute
Level Det
Lin. Audio
Lin.Aud.Sel.
Outp. Sel.
Inp. Sel.
Serial-Bus Control
Erase Osc.
AUDIO ERASE HEAD
MAIN ERASE HEAD
REC/PB HEAD
Demod.
A/D
DELTA_IO.dwg
HS_Z990422

TUNER 2 AND VIDEO PROCESSING - BLOCK DIAGRAM

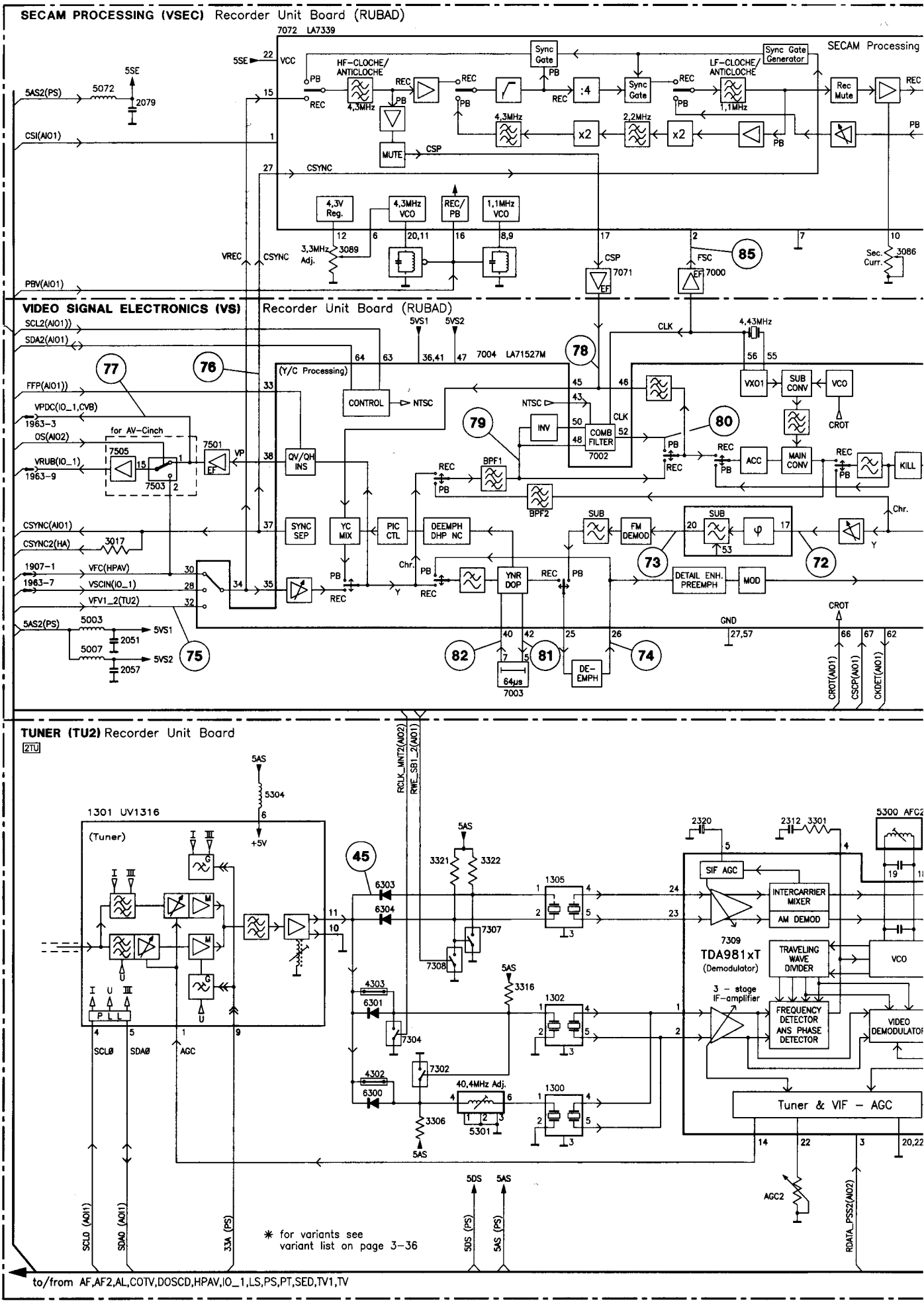

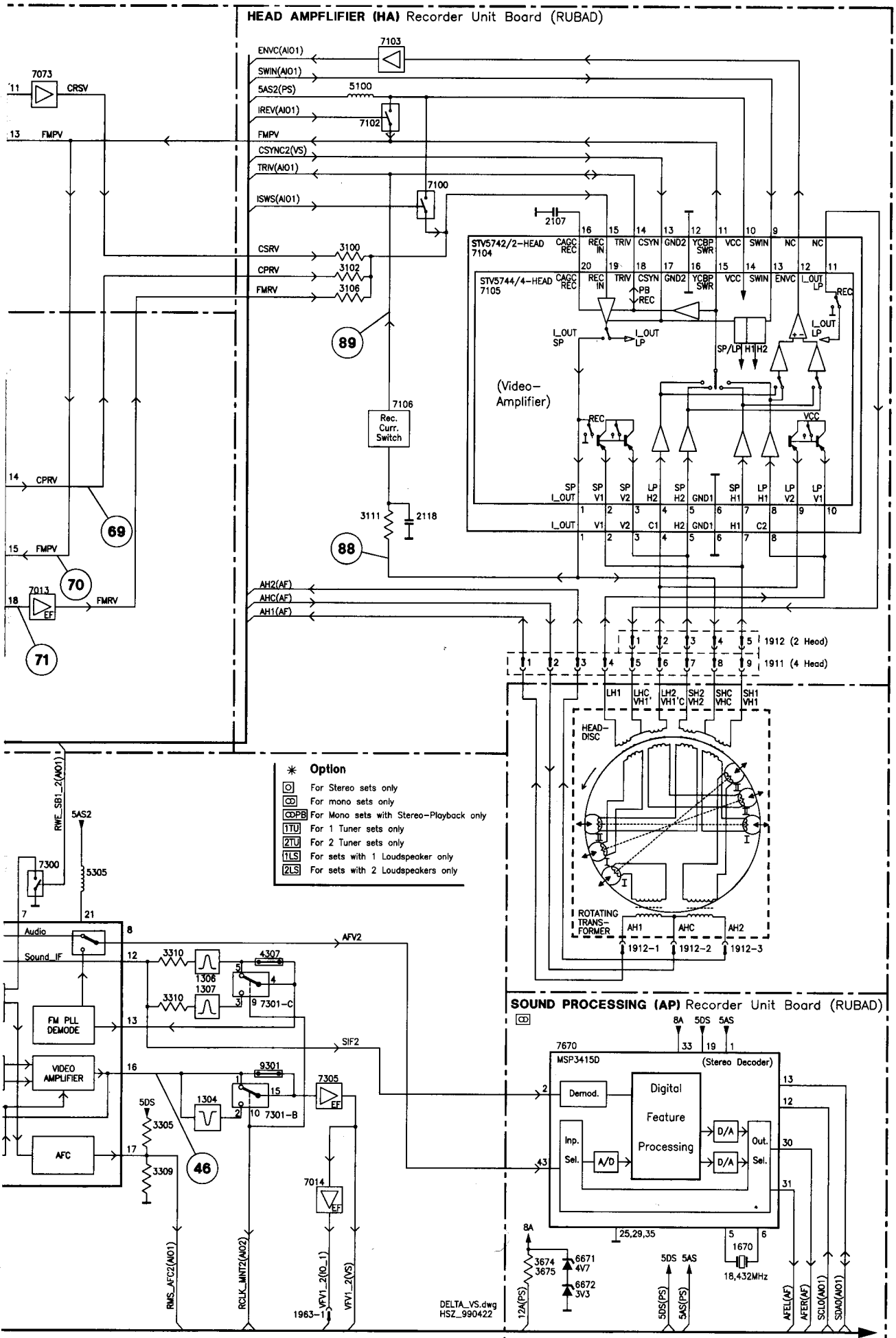
HEAD AMPFLIFIER (HA) Recorder Unit Board (RUBAD)
ENVC(AIO1)
SWIN(AIO1)
5AS2(PS)
IREV(AIO1)
FMPV
CSYNC2(VS)
TRIV(AIO1)
ISWS(AIO1)
CSRV
CPRV
FMRV
7103
7073
5100
7102
7100
2107
3100
3102
3106
STV5742/2-HEAD 7104
STV5744/4-HEAD 7105
(Video-Amplifier)
7106
Rec. Curr. Switch
3111
2118
AH2(AF)
AHC(AF)
AH1(AF)
1912 (2 Head)
1911 (4 Head)
HEAD-DISC
ROTATING TRANS-FORMER
1912-1
1912-2
1912-3
Option
For Stereo sets only
For mono sets only
For Mono sets with Stereo-Playback only
For 1 Tuner sets only
For 2 Tuner sets only
For sets with 1 Loudspeaker only
For sets with 2 Loudspeakers only
RWE_SB1_2(AIO1)
5AS2
7300
5305
Audio
Sound_IF
FM PLL DEMODE
VIDEO AMPLIFIER
AFC
3310
1306
1307
4307
7301-C
1304
9301
7305
7301-B
5DS
3305
3309
7014
AFV2
SIF2
SOUND PROCESSING (AP) Recorder Unit Board (RUBAD)
7670
MSP3415D
(Stereo Decoder)
Demod.
Digital Feature Processing
Inp. Sel.
A/D
D/A
Out. Sel.
3674
3675
6671 4V7
6672 3V3
1670
18,432MHz
RMS_AFC2(AIO1)
RCLK_WINT2(AIO2)
VFV1_2(IO_1)
VFV1_2(VS)
DELTA_VS.dwg
HSZ_990422
AFEL(AF)
AFER(AF)
SCLO(AIO1)
SDAO(AIO1)

CENTRAL CONTROL AND DECK ELECTRONICS - BLOCK I

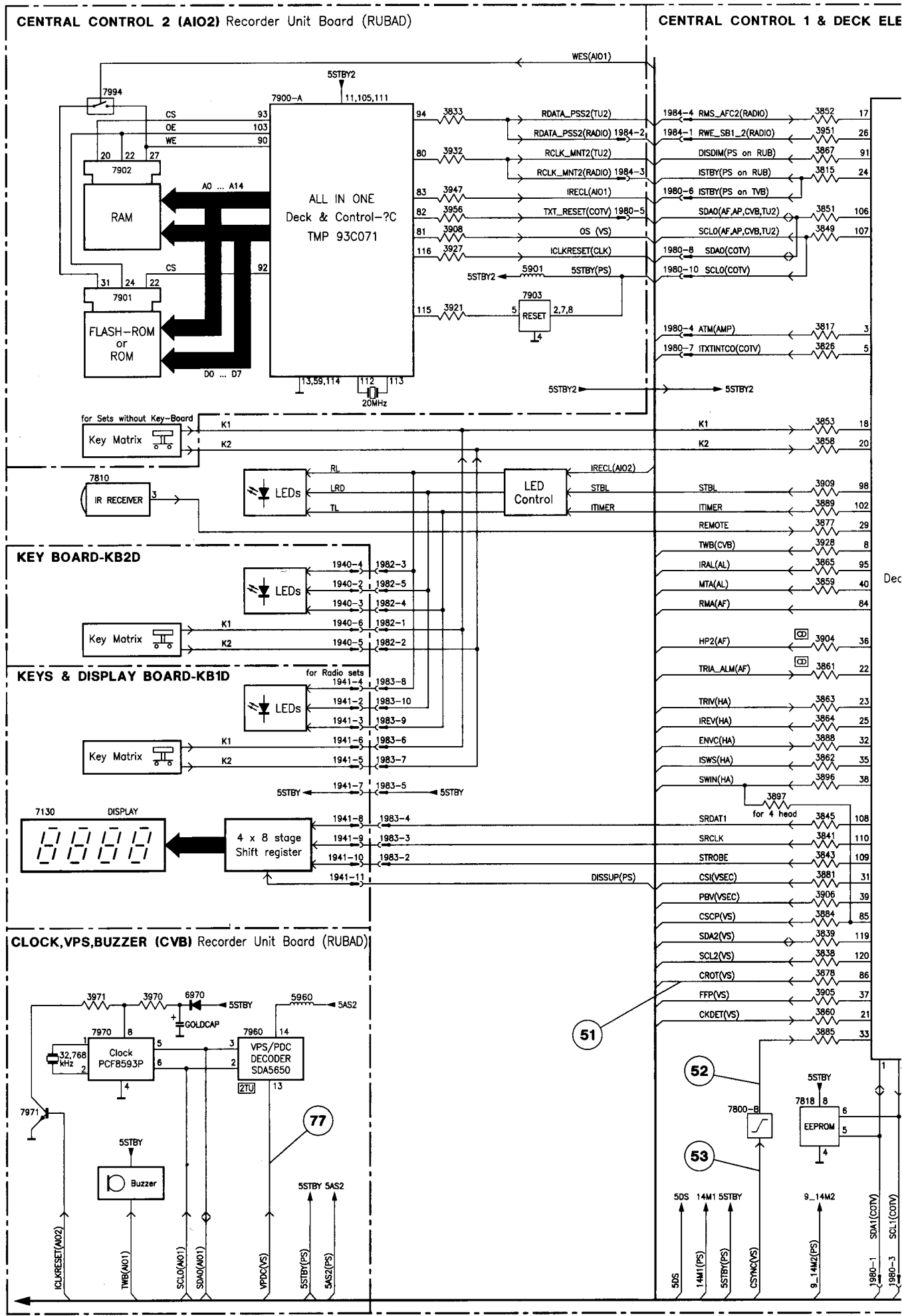

IAGRAM

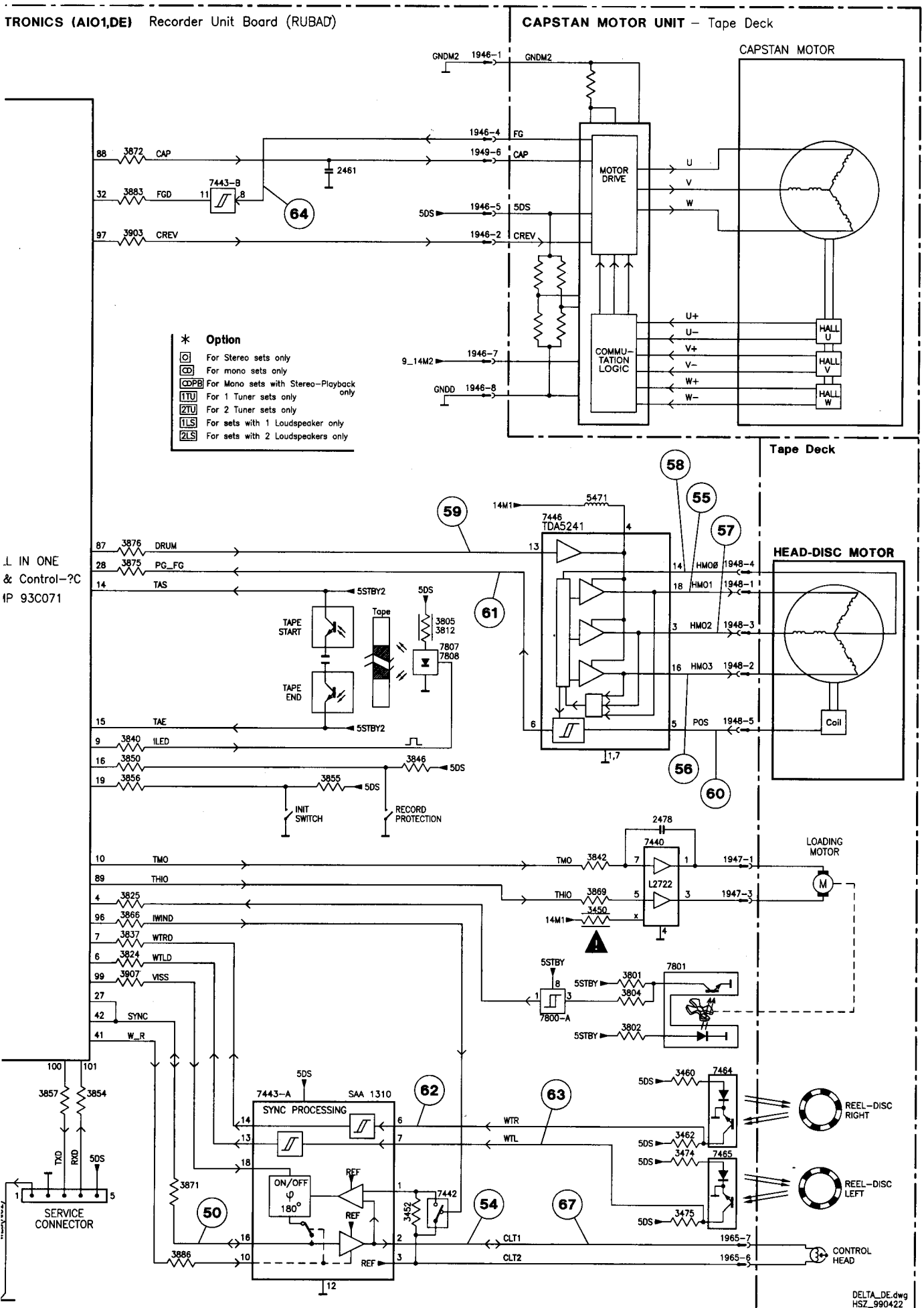
TRONICS (AIO1,DE) Recorder Unit Board (RUBAD)
CAPSTAN MOTOR UNIT – Tape Deck
CAPSTAN MOTOR
MOTOR DRIVE
COMMU-TATION LOGIC
HALL U
HALL V
HALL W
Tape Deck
HEAD-DISC MOTOR
Coil
TDA5241
TAPE START
TAPE END
INIT SWITCH
RECORD PROTECTION
LOADING MOTOR
L2722
SYNC PROCESSING
SAA 1310
ON/OFF
SERVICE CONNECTOR
REEL-DISC RIGHT
REEL-DISC LEFT
CONTROL HEAD
Option
For Stereo sets only
For mono sets only
For Mono sets with Stereo-Playback only
For 1 Tuner sets only
For 2 Tuner sets only
For sets with 1 Loudspeaker only
For sets with 2 Loudspeakers only
DELTA_DE.dwg
HSZ_990422

Power Supply (PS) - TV Board (TVBAD)

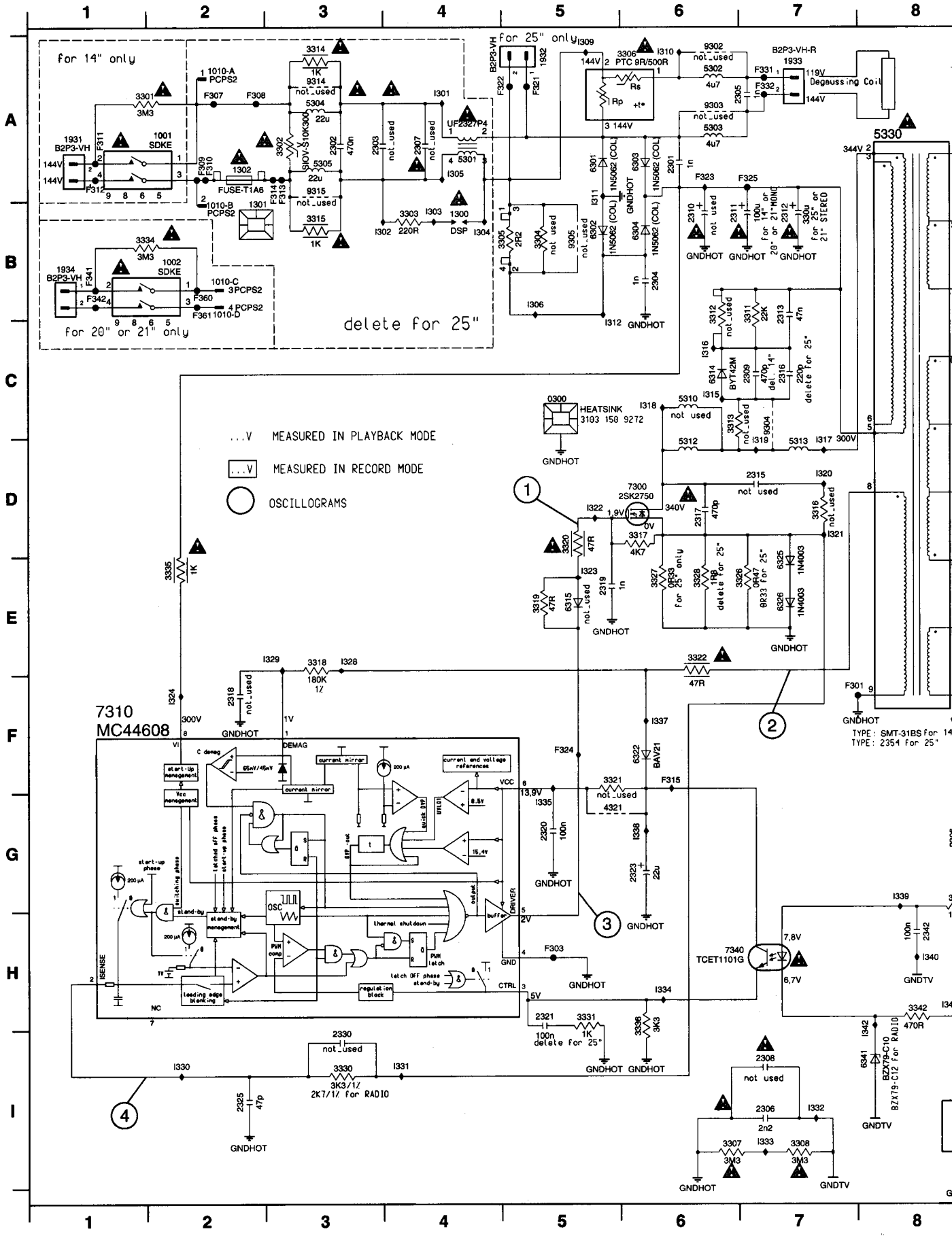

	Interconnections														
Circuit	ACO	AF	AF2	AIO1	AIO2	AL	AMP	AP	COTV	CVB	DE	DOSCD	HA	HPAV	IO_1
page	3-29	3-22	3-30	3-16	3-17	3-23	3-13	3-21	3-14	3-19	3-18	3-32	3-26	3-27	3-11
Circuit	KB1D	KB2D	LS	MFSWD	PS (RUB)	PS (TVB)	PT	SF	SFD	TU1	TU2	TV	VS	VSEC	
page	3-33	3-34	3-8	3-34	3-15	3-7	3-28	3-12	3-31	3-9	3-20	3-10	3-24	3-25	

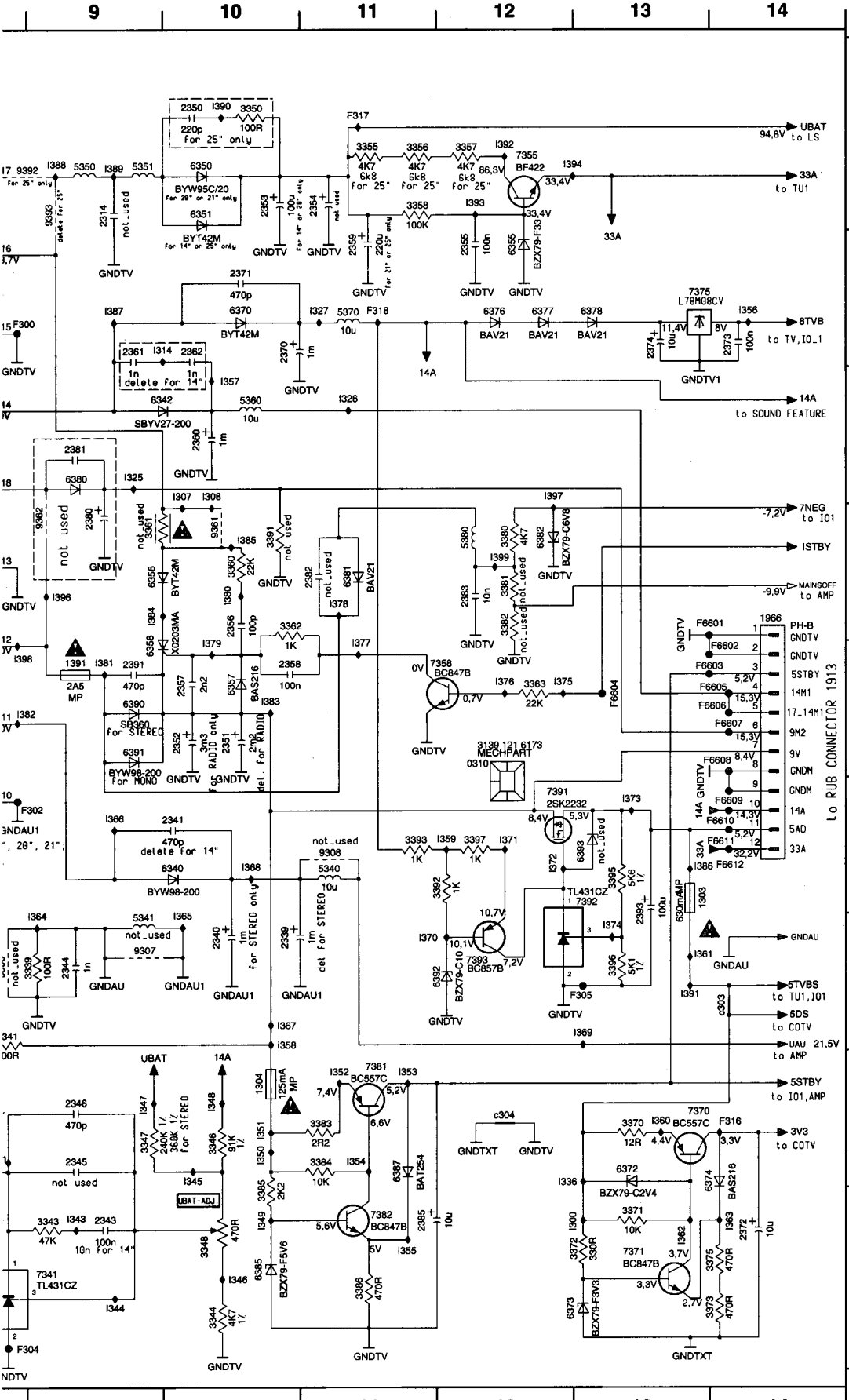

0300 C5	3393 F11	I312 C5
0310 E12	3395 F13	I314 B9
1001 A2	3396 G13	I315 C6
1002 B2	3397 F12	I316 C6
1010-A A2	4321 G5	I317 D7
1010-B A2	5301 A4	I318 C6
1010-C B2	5302 A6	I319 D7
1010-D B2	5303 A6	I320 D7
1300 B4	5304 A3	I321 D7
1301 A2	5305 A3	I322 D5
1302 B2	5310 C6	I323 E5
1303 F13	5312 D6	I324 F2
1304 H10	5313 D7	I325 C9
1391 E9	5330 A8	I326 C11
1931 A1	5340 F11	I327 B11
1932 A5	5341 G9	I328 E3
1933 A7	5350 A9	I329 E3
1934 B1	5351 A9	I330 I2
1966 D14	5360 C10	I331 I4
2301 A6	5370 B11	I332 I7
2302 A3	5380 D12	I333 I7
2303 A3	6301 A5	I334 H6
2304 B6	6302 B5	I335 G5
2305 A7	6303 A6	I336 H12
2306 I7	6304 B6	I337 F6
2307 A4	6314 C6	I338 G6
2308 I7	6315 E5	I339 G8
2309 C7	6322 F6	I340 H8
2310 B6	6325 E7	I341 H8
2311 B6	6326 E7	I342 H8
2312 B7	6340 F10	I343 I9
2313 B7	6341 I8	I344 I9
2314 A9	6342 C9	I345 H10
2315 D7	6350 A10	I346 I10
2316 C7	6351 A10	I347 H9
2317 D6	6355 B12	I348 H10
2318 F2	6356 D9	I349 I10
2319 E5	6357 E10	I350 H10
2320 G5	6358 E9	I351 H10
2321 H5	6370 B10	I352 H11
2323 G6	6372 H13	I353 H11
2325 I2	6373 I12	I354 H11
2330 I3	6374 H14	I355 I11
2339 G10	6376 B12	I356 B14
2340 G10	6377 B12	I357 C10
2341 F10	6378 B13	I358 G10
2342 H8	6380 C9	I359 F12
2343 I9	6381 D11	I360 H13
2344 G9	6382 D12	I361 G13
2345 H9	6385 I10	I362 I13
2346 H9	6387 H11	I363 I14
2350 A10	6390 E9	I364 G9
2351 E10	6391 E9	I365 G10
2352 E10	6392 G12	I366 F9
2353 A10	6393 F13	I367 G10
2354 A11	7300 D6	I368 F10
2355 B12	7310 F1	I369 G13
2356 D10	7340 H7	I370 G11
2357 E10	7341 I9	I371 F12
2358 E10	7355 A12	I372 F12
2359 B11	7358 E12	I373 F13
2360 C10	7370 H13	I374 G13
2361 B9	7371 I13	I375 E12
2362 B10	7375 B13	I376 E12
2370 B10	7381 H11	I377 E11
2371 B10	7382 I11	I378 D11
2372 I14	7391 F12	I379 E10
2373 B14	7392 F13	I380 D10
2374 B13	7393 G12	I381 E9
2380 D9	9302 A6	I382 E8
2381 C9	9303 A6	I383 E10
2382 D11	9304 C7	I384 D9
2383 D12	9305 B5	I385 D10
2385 I11	9306 G8	I386 F13
2391 E9	9307 G9	I387 B9
2393 G13	9308 F11	I388 A9
3301 A1	9314 A3	I389 A9
3302 A3	9315 A3	I390 A10
3303 B4	9361 D10	I391 G13
3304 B5	9362 D9	I392 A12
3305 B5	9392 A9	I393 A12
3306 A5	9393 A9	I394 A12
3307 I6	F300 B8	I396 D9
3308 I7	F301 F7	I397 C12
3311 B7	F302 F9	I398 E8
3312 B6	F303 H5	I399 D12
3313 C6	F304 I8	c303 G14
3314 A3	F305 G13	c304 H12
3315 B3	F307 A2	
3316 D7	F308 A2	
3317 D6	F309 A2	
3318 E3	F310 A2	
3319 E5	F311 A1	
3320 D5	F312 A1	
3321 F5	F313 A3	
3322 E6	F314 A3	
3326 E7	F315 F6	
3327 E6	F316 H14	
3328 E6	F317 A11	
3330 I3	F318 B11	
3331 H5	F321 A5	
3334 B1	F322 A5	
3335 E2	F323 A6	
3336 H6	F324 F5	
3339 G9	F325 A7	
3341 G8	F331 A7	
3342 H8	F332 A7	
3343 I9	F341 B1	
3344 I10	F342 B1	
3346 H10	F360 B2	
3347 H9	F361 B2	
3348 I10	F6601 D14	
3350 A10	F6602 E14	
3355 A11	F6603 E13	
3356 A11	F6604 E13	
3357 A12	F6605 E14	
3358 A11	F6606 E14	
3360 D10	F6607 E14	
3361 D9	F6608 E14	
3362 D10	F6609 F14	
3363 E12	F6610 F14	
3370 H13	F6611 F14	
3371 I13	F6612 F14	
3372 I13	I300 I12	
3373 I14	I301 A4	
3375 I14	I302 B3	
3380 D12	I303 B4	
3381 D12	I304 B4	
3382 D12	I305 A4	
3383 H11	I306 B5	
3384 H11	I307 C10	
3385 I10	I308 C10	
3386 I11	I309 A5	
3391 D10	I310 A6	
3392 F12	I311 A5	

Deflection (LS) - TV Board (TVBAD)

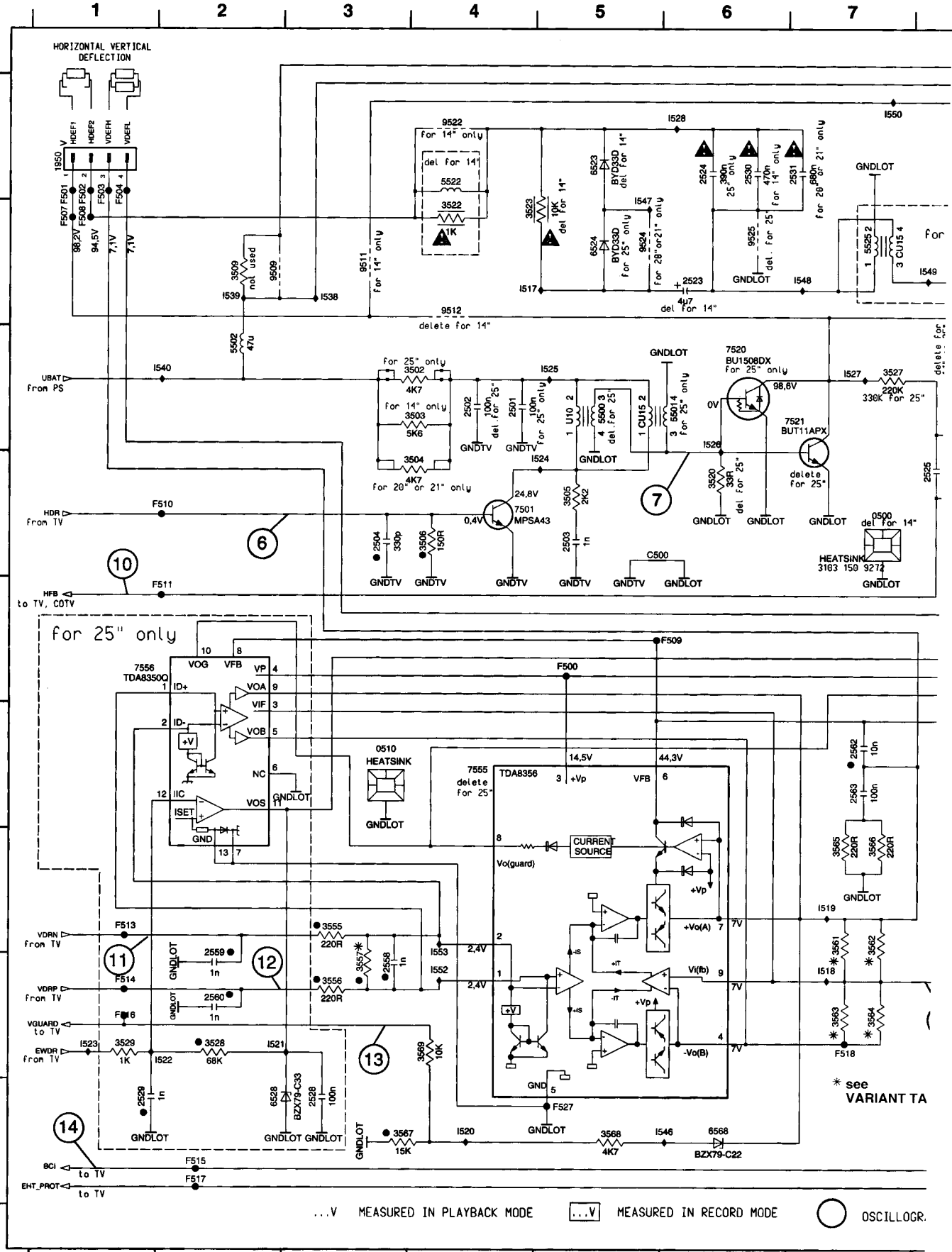

	Interconnections														
Circuit	ACO	AF	AF2	AIO1	AIO2	AL	AMP	AP	COTV	CVB	DE	DOSCD	HA	HPAV	IO_1
page	3-29	3-22	3-30	3-16	3-17	3-23	3-13	3-21	3-14	3-19	3-18	3-32	3-26	3-27	3-11
Circuit	KB1D	KB2D	LS	MFSWD	PS (RUB)	PS (TVB)	PT	SF	SFD	TU1	TU2	TV	VS	VSEC	
page	3-33	3-34	3-8	3-34	3-15	3-7	3-28	3-12	3-31	3-9	3-20	3-10	3-24	3-25	

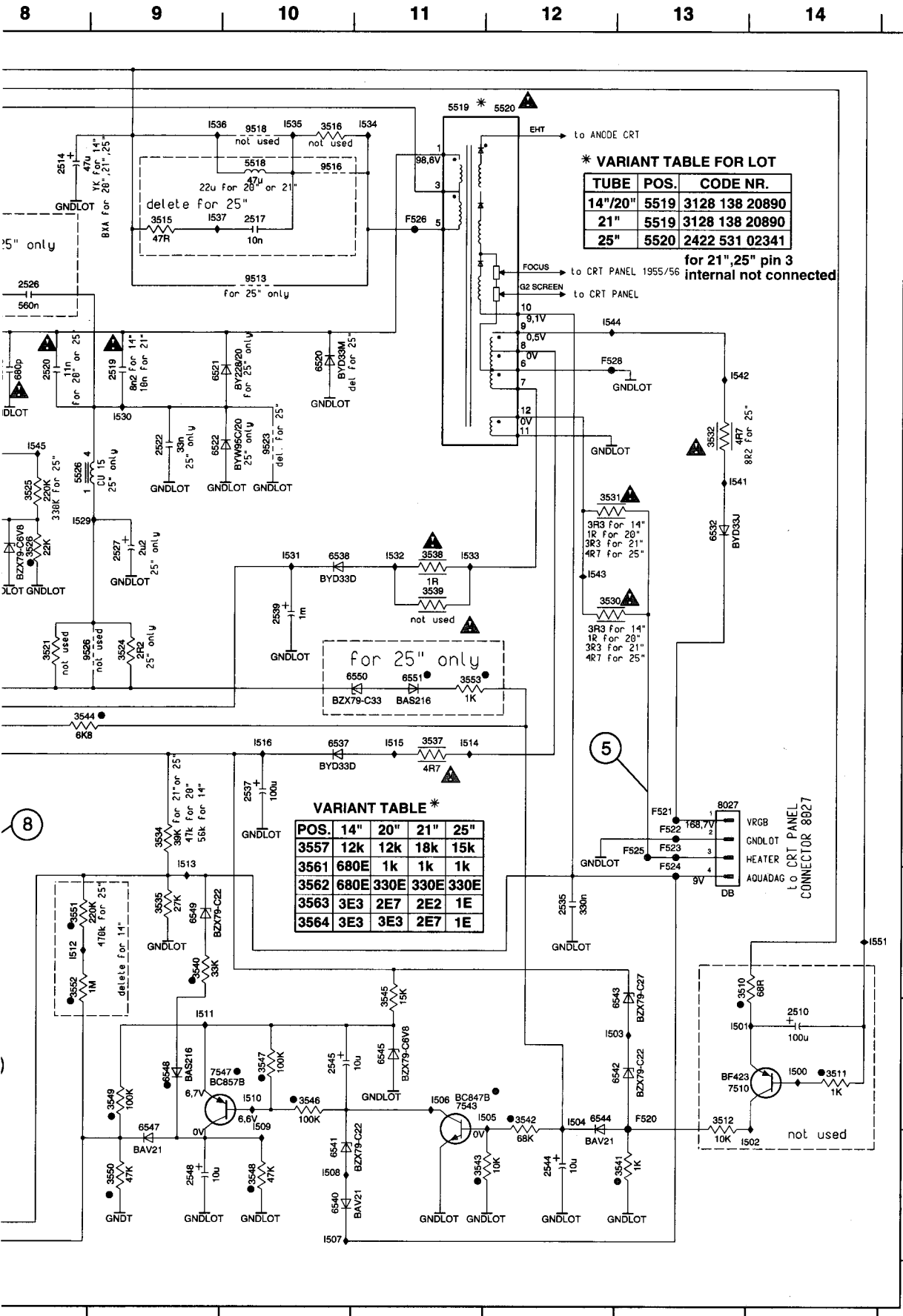

0500 D7
0510 F3
1950 A1
2501 C4
2502 C4
2503 D5
2504 D3
2510 H14
2514 A8
2517 B10
2518 C8
2519 C9
2520 C8
2522 C9
2523 B6
2524 A6
2525 D8
2526 B8
2527 D9
2528 I3
2529 I1
2530 A6
2531 A7
2535 G12
2537 F10
2539 E10
2544 I12
2545 H10
2548 I9
2558 H3
2559 H2
2560 H2
2562 F7
2563 F7
3502 C4
3503 C4
3504 D4
3505 D5
3506 D4
3509 B2
3510 G13
3511 H14
3512 H13
3515 B9
3516 A10
3520 D6
3521 E8
3522 B4
3523 B4
3524 E9
3525 D8
3526 D8
3527 C7
3528 H2
3529 H1
3530 D12
3531 D12
3532 C13
3534 F9
3535 G9
3537 F11
3538 D11
3539 D11
3540 G9
3541 I13
3542 H12
3543 I11
3544 E8
3545 G11
3546 H10
3547 H10
3548 I10
3549 H9
3550 I9
3551 G8
3552 G8
3553 E11
3555 G3
3556 H3
3557 H3
3561 G7
3562 G7
3563 H7
3564 H7
3565 G7
3566 G7
3567 I3
3568 I5
3569 H4
5500 C5
5501 C6
5502 C2
5518 A10
5519 A11
5520 A12
5522 A4
5525 B7
5526 D8
6520 C10
6521 C9
6522 C9
6523 A5
6524 B5
6526 D8
6528 I2
6532 D13
6537 F10
6538 D10
6540 I10
6541 I10
6542 H13
6543 H13
6544 H12
6545 H11
6547 I9
6548 H9
6549 G9
6550 E11
6551 E11
6568 I6
7501 D4
7510 H14
7520 C6
7521 C7
7543 H11
7547 H10
7555 F4
7556 E1
8027 F13
9509 B2
9511 B3
9512 B4
9513 B10
9516 A10
9518 A10
9522 A4
9523 C10
9524 B5
9525 B6
9526 E9
C500 D5
F500 E5
F501 A1
F502 A1
F503 A1
F504 A1
F507 B1
F508 B1
F509 E6
F510 D2
F511 E2
F513 G1
F514 H1
F515 I2
F516 H1
F517 I2
F518 H7
F520 H13
F521 F13
F522 F13
F523 F13
F524 G13
F525 F13
F526 B11
F527 I5
F528 C12
I500 H14
I501 H13
I502 I14
I503 H12
I504 H12
I505 H11
I506 H11
I507 I10
I508 I10
I509 H10
I510 H10
I511 D6
I512 E8
I513 G8
I514 F11
I515 F11
I516 F10
I517 B4
I518 H7
I519 G7
I520 I4
I521 H2
I522 H2
I523 H1
I524 D5
I525 C5
I526 C6
I527 C7
I528 A6
I529 D8
I530 C9
I531 D10
I532 D11
I533 D11
I534 A11
I535 A10
I536 A9
I537 B9
I538 B3
I539 B2
I540 C2
I541 D13
I542 C13
I543 D12
I544 B12
I545 C8
I546 I6
I547 B5
I548 B7
I549 B8
I550 A7
I551 G14
I552 H4
I553 G4

Tuner 1 (TU1) - TV Board (TVBAD)

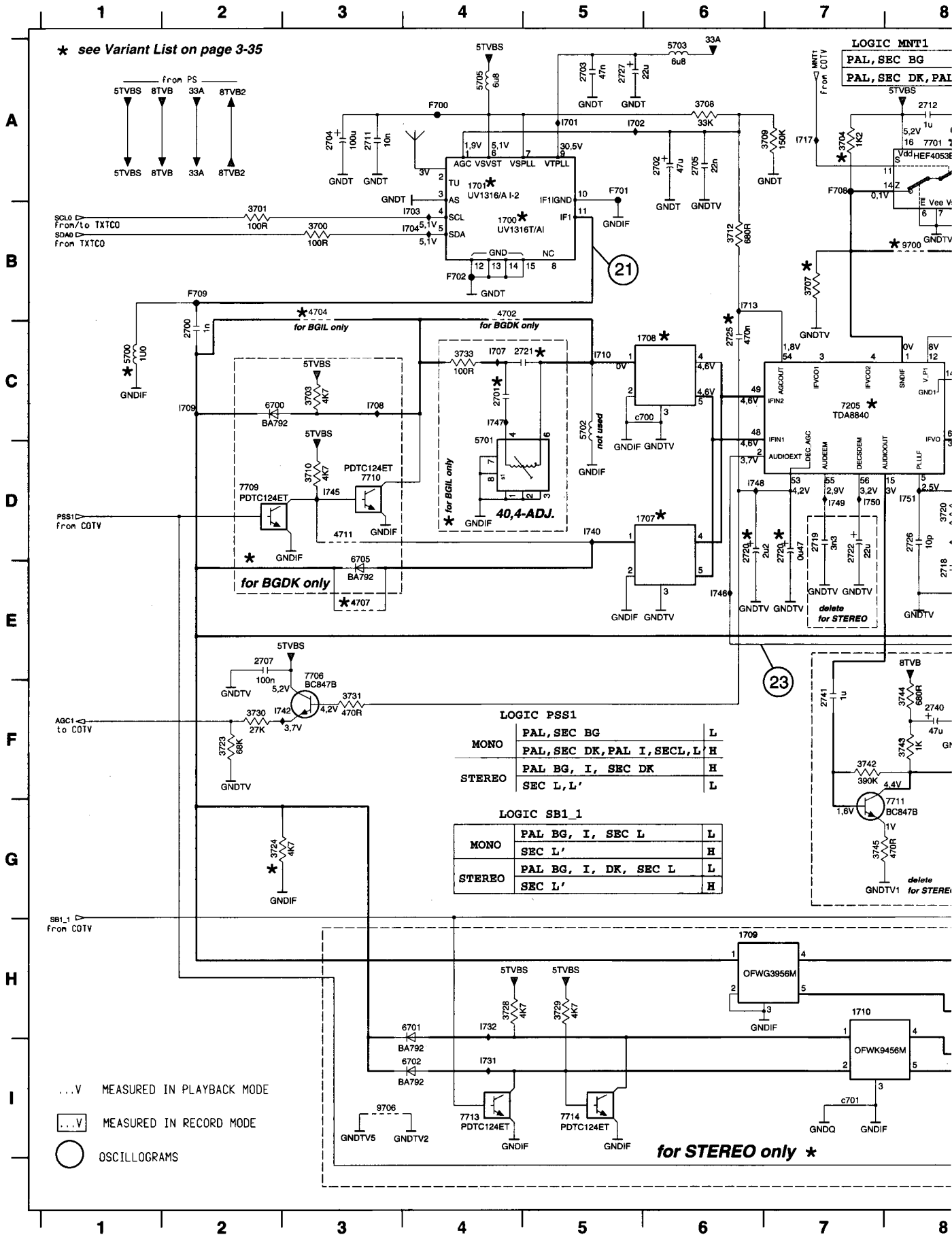

Interconnections															
Circuit	ACO	AF	AF2	AIO1	AIO2	AL	AMP	AP	COTV	CVB	DE	DOSCD	HA	HPAV	IO_1
page	3-29	3-22	3-30	3-16	3-17	3-23	3-13	3-21	3-14	3-19	3-18	3-32	3-26	3-27	3-11
Circuit	KB1D	KB2D	LS	MFSWD	PS (RUB)	PS (TVB)	PT	SF	SFD	TU1	TU2	TV	VS	VSEC	
page	3-33	3-34	3-8	3-34	3-15	3-7	3-28	3-12	3-31	3-9	3-20	3-10	3-24	3-25	

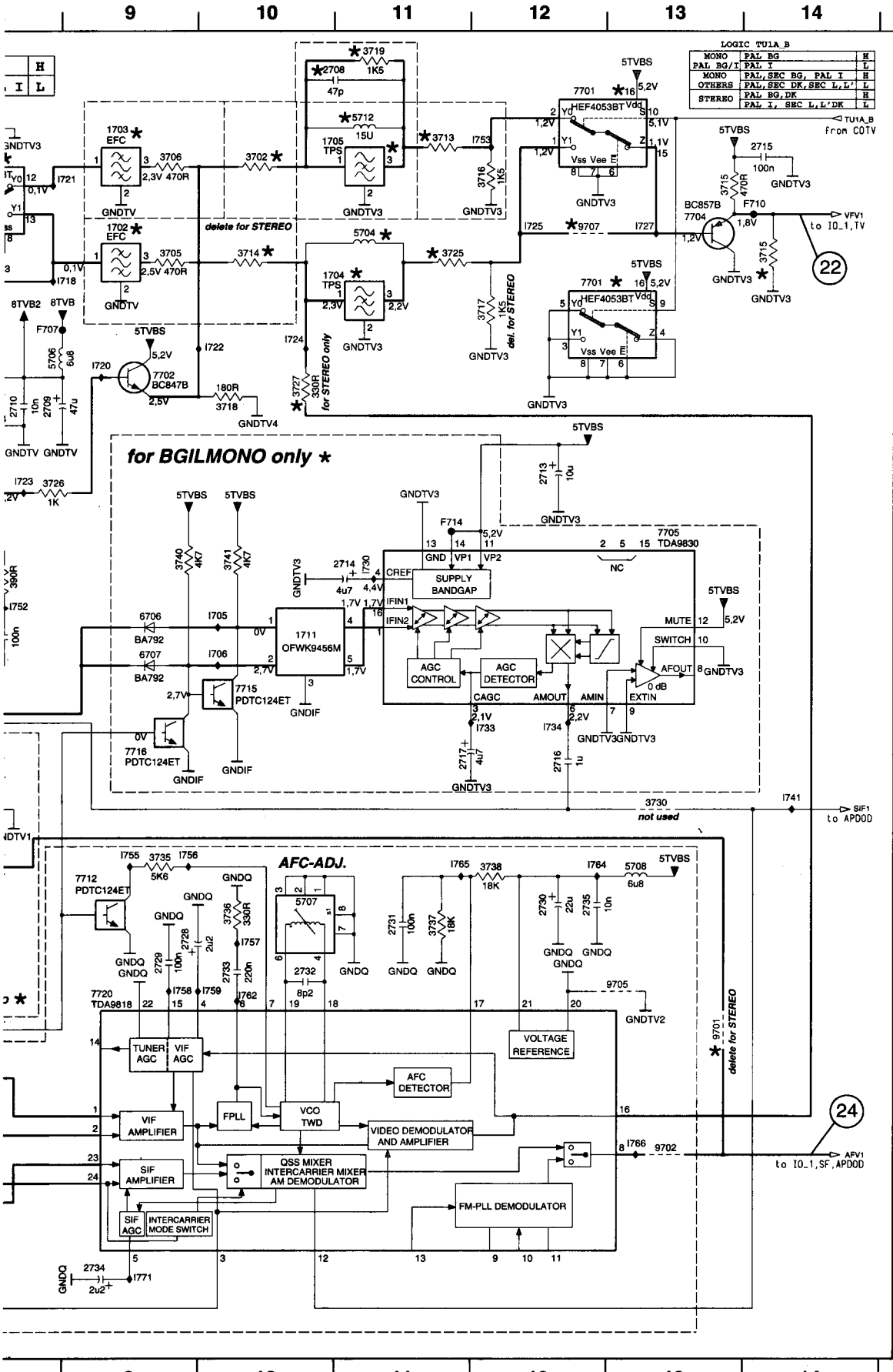

1700 B4
1701 A4
1702 B9
1703 A9
1704 B10
1705 A10
1707 D5
1708 C5
1709 H6
1710 H7
1711 E10
2700 C2
2701 C4
2702 A6
2703 A5
2704 A3
2705 A6
2707 E2
2708 A11
2709 C8
2710 C8
2711 A3
2712 A8
2713 C12
2714 D11
2715 A14
2716 E12
2717 E11
2718 E8
2719 D7
2720 D6
2721 C5
2722 D7
2723 D7
2725 C6
2726 D8
2727 A5
2728 G9
2729 G9
2730 G12
2731 G11
2732 G10
2733 G10
2734 I9
2735 G12
2740 F8
2741 F7
3700 B3
3701 B2
3702 A10
3703 C3
3704 A7
3705 B9
3706 A9
3707 B7
3708 A6
3709 A7
3710 D3
3711 B14
3712 B6
3713 A11
3714 B10
3715 A13
3716 A12
3717 B12
3718 C10
3719 A11
3720 D8
3723 F2
3724 G2
3725 B11
3726 C8
3727 C10
3728 H4
3729 H5
3730 F2
3731 F3
3733 C4
3735 F9
3736 G10
3737 G11
3738 F12
3740 D9
3741 D10
3742 F7
3743 F8
3744 F8
3745 G7
4700 B8
4701 B12
4702 B4
4704 B3
4707 E3
4711 D3
4730 F13
5700 C1
5701 C4
5702 C5
5703 A6
5704 B11
5705 A4
5706 B8
5707 G10
5708 F13
5712 A11
6700 C2
6701 H4
6702 I4
6705 E3
6706 D9
6707 E9
7205-A C7
7701-A A8
7701-B A12
7701-C B12
7702 C9
7704 A13
7705 D13
7706 E3
7709 D2
7710 D3
7711 G8
7712 F9
7713 I4
7714 I5
7715 E10
7716 E9
7720 G9
9701 G13
9702 H13
9705 G13
9706 I3
F700 A4
F701 A5
F702 B4
F707 B8
F708 A7
F709 B2
F714 D11
F716 E10
F717 C4
F720 F11
I701 A5
I702 A5
I703 B4
I704 B4
I705 D10
I706 A14
I708 C3
I709 C2
I710 C5
I713 B6
I717 A7
I718 B9
I720 C9
I721 A9
I722 B10
I723 C8
I724 B10
I725 B12
I727 B13
I730 D11
I731 I4
I732 H4
I733 E12
I734 E12
I740 D5
I741 F14
I742 F3
I745 D3
I746 E6
I747 C4
I748 D6
I749 D7
I750 D7
I751 D8
I752 D8
I753 A12
I755 F9
I756 F9
I757 G10
I758 G9
I759 G10
I762 G10
I764 F12
I766 H13
I771 I9
c700 C6
c701 I7

TV-Processing (TV) - TV Board (TVBAD)

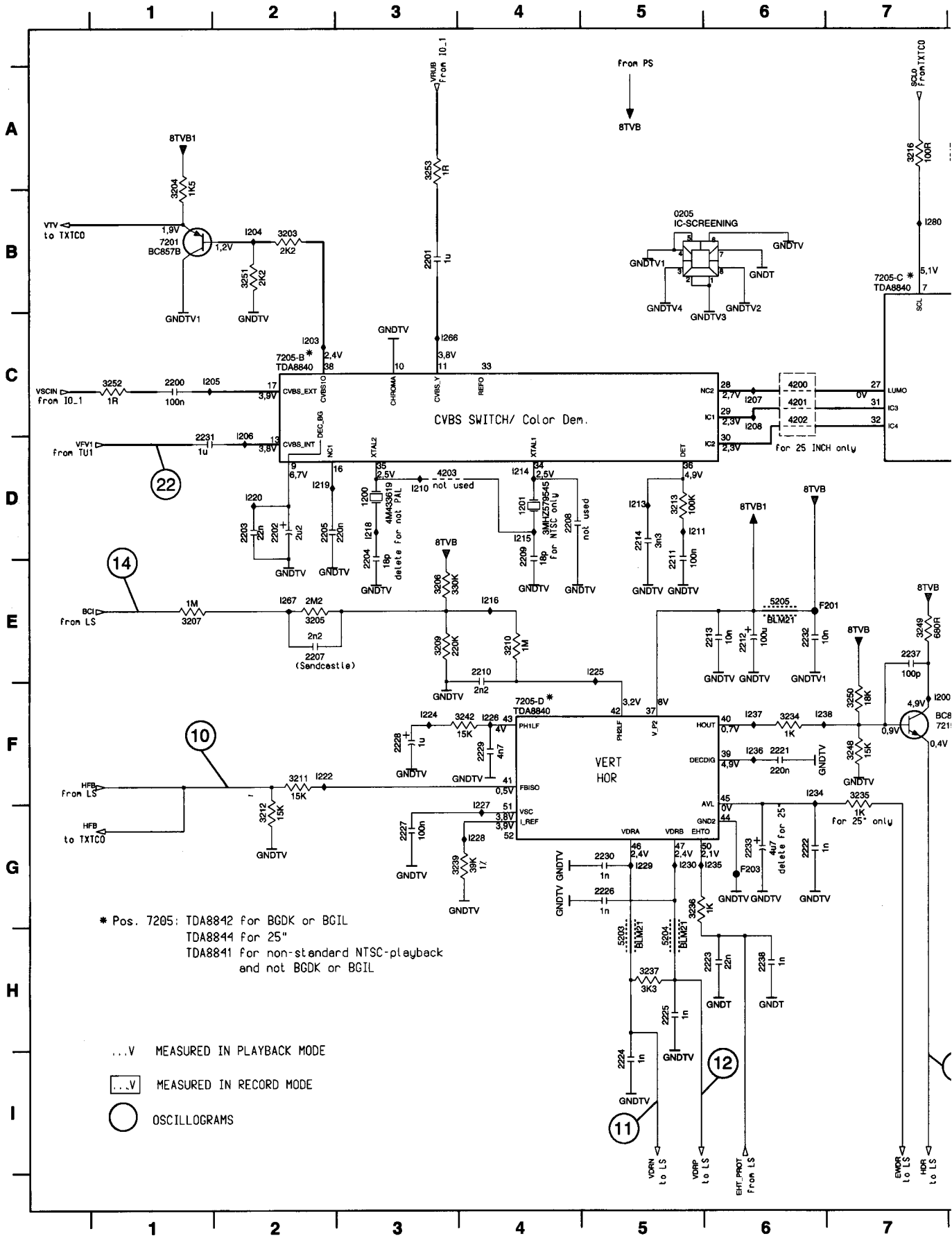

	Interconnections														
Circuit	ACO	AF	AF2	AIO1	AIO2	AL	AMP	AP	COTV	CVB	DE	DOSCD	HA	HPAV	IO_1
page	3-29	3-22	3-30	3-16	3-17	3-23	3-13	3-21	3-14	3-19	3-18	3-32	3-26	3-27	3-11
Circuit	KB1D	KB2D	LS	MFSWD	PS (RUB)	PS (TVB)	PT	SF	SFD	TU1	TU2	TV	VS	VSEC	
page	3-33	3-34	3-8	3-34	3-15	3-7	3-28	3-12	3-31	3-9	3-20	3-10	3-24	3-25	

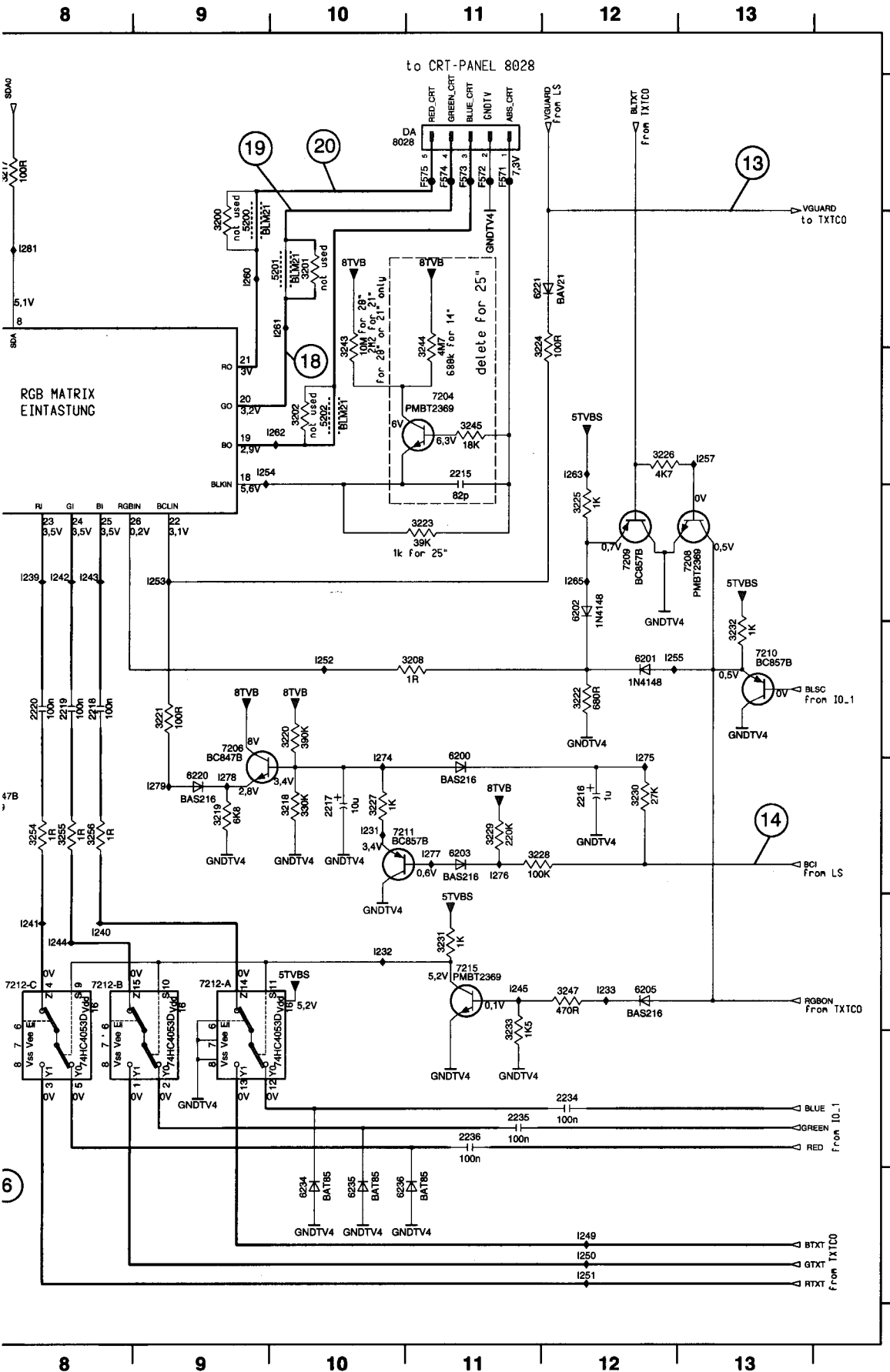

0205 B5
1200 D3
1201 D4
2200 C1
2201 B3
2202 D2
2203 D2
2204 D3
2205 D2
2207 E2
2208 D4
2209 D4
2210 E4
2211 E5
2212 E6
2213 E6
2214 D5
2215 C11
2216 F12
2217 F10
2218 E8
2219 E8
2220 E8
2221 F6
2222 G6
2223 H6
2224 I5
2225 H5
2226 G5
2227 G3
2228 F3
2229 F4
2230 G5
2231 D1
2232 E6
2233 G6
2234 H12
2235 H11
2236 H11
2237 E7
2238 H6
3200 B9
3201 B10
3202 C10
3203 B2
3204 A1
3205 E2
3206 E3
3207 E1
3208 E11
3209 E3
3210 E4
3211 F2
3212 G2
3213 D5
3216 A7
3217 A8
3218 F10
3219 F9
3220 E10
3221 E9
3222 E12
3223 D11
3224 B11
3225 D12
3226 C12
3227 F10
3228 F11
3229 F11
3230 F12
3231 G11
3232 E13
3233 G11
3234 F6
3235 F7
3236 G5
3237 H5
3239 G3
3242 F4
3243 B10
3244 B11
3245 C11
3247 G12
3248 F7
3249 E7
3250 F7
3251 B2
3252 C1
3253 A3
3254 F8
3255 F8
3256 F8
4200 C6
4201 C6
4202 C6
4203 D3
5200 B9
5201 B10
5202 C10
5203 H5
5204 H5
5205 E6
6200 F11
6201 E12
6202 D12
6203 F11
6205 G12
6220 F9
6221 B11
6234 I10
6235 I10
6236 I10
7201 B1
7204 C11
7205-B C2
7205-C B7
7205-D F4
7206 E9
7208 D13
7209 D12
7210 E13
7211 F11
7212-A G9
7212-B G8
7212-C G8
7215 G11
7219 F7
8028 A11
F201 E7
F203 G6
F571 A11
F572 A11
F573 A11
F574 A11
F575 A11
I200 F7
I203 C2
I204 B2
I205 C1
I206 C2
I207 C6
I208 C6
I210 D3
I211 D5
I213 D5
I214 D4
I215 D4
I216 E4
I218 D3
I219 D2
I220 D2
I222 F2
I224 F3
I225 E5
I226 F4
I227 G4
I228 G4
I229 G5
I230 G5
I231 F10
I232 G10
I233 G12
I234 F6
I235 G6
I236 F6
I237 F6
I238 F6
I239 D8
I240 G8
I241 G8
I242 D8
I243 D8
I244 G8
I245 G11
I249 I12
I250 I12
I251 I12
I252 E10
I253 D9
I254 C9
I255 E12
I257 C13
I260 B9
I261 B10
I262 C10
I263 C12
I265 D12
I276 C3
I277 E2
I274 E10
I275 E12
I276 F11
I277 F11
I278 F9
I279 F9
I280 B7
I281 B8

Input/Output (IO_1) - TV Board (TVBAD)

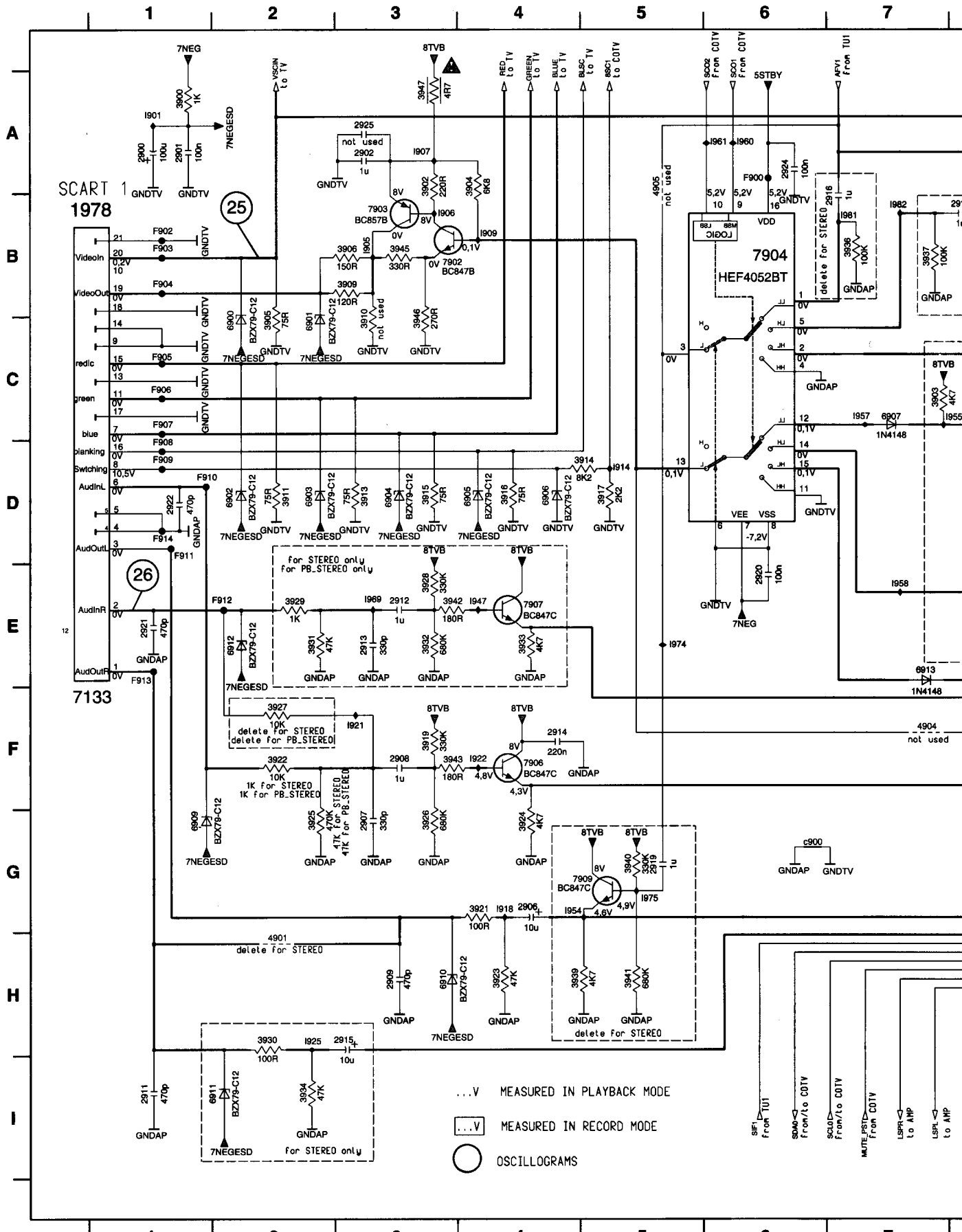

	Interconnections														
Circuit	ACO	AF	AF2	AIO1	AIO2	AL	AMP	AP	COTV	CVB	DE	DOSCD	HA	HPAV	IO_1
page	3-29	3-22	3-30	3-16	3-17	3-23	3-13	3-21	3-14	3-19	3-18	3-32	3-26	3-27	3-11
Circuit	KB1D	KB2D	LS	MFSWD	PS (RUB)	PS (TVB)	PT	SF	SFD	TU1	TU2	TV	VS	VSEC	
page	3-33	3-34	3-8	3-34	3-15	3-7	3-28	3-12	3-31	3-9	3-20	3-10	3-24	3-25	

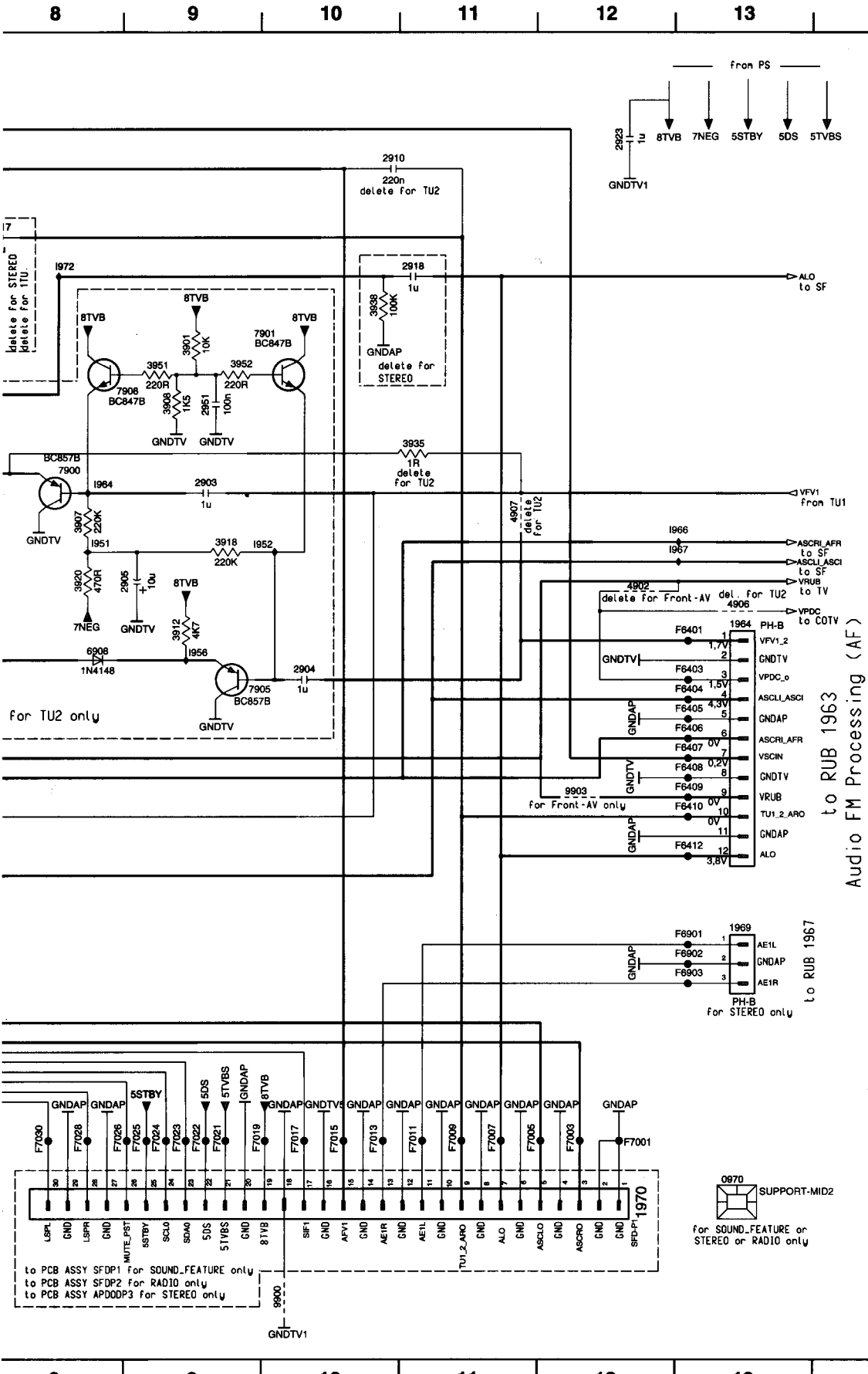

0970 I13
1964 D13
1969 G13
1970 I12
1978 B1
2900 A1
2901 A1
2902 A3
2903 C9
2904 E10
2905 D9
2906 G4
2907 G3
2908 F3
2909 H3
2910 A10
2911 I1
2912 E3
2913 E3
2914 F4
2915 H3
2916 B7
2917 B8
2918 B11
2919 G5
2920 E6
2921 E1
2922 D1
2923 A12
2924 A6
2925 A3
2951 C9
3900 A1
3901 B9
3902 A3
3903 C7
3904 A4
3905 C2
3906 B3
3907 D8
3908 C9
3909 B3
3910 C3
3911 D2
3912 E9
3913 D3
3914 D5
3915 D3
3916 D4
3917 D5
3918 D9
3919 F3
3920 D8
3921 G4
3922 F2
3923 H4
3924 G4
3925 G2
3926 G3
3927 F2
3928 E3
3929 E2
3930 H2
3931 E2
3932 E3
3933 E4
3934 I2
3935 C11
3936 B7
3937 B7
3938 B10
3939 H4
3940 G5
3941 H5
3942 E3
3943 F3
3945 B3
3946 C3
3947 A3
3951 C9
3952 C9
4901 H2
4902 D12
4904 F7
4905 A5
4906 D13
4907 D11
6900 C2
6901 C2
6902 D2
6903 D2
6904 D3
6905 D4
6906 D4
6907 C7
6908 E8
6909 G1
6910 H3
6911 I2
6912 E2
6913 E7
7900 C8
7901 B10
7902 B4
7903 B3
7904 B6
7905 E10
7906 F4
7907 E4
7908 C8
7909 G5
9900 I10
9903 F12
F6401 E13
F6403 E13
F6404 E13
F6405 E13
F6406 E13
F6407 E13
F6408 F13
F6409 F13
F6410 F13
F6412 F13
F6901 G13
F6902 G13
F6903 G13
F7001 H12
F7003 H12
F7005 H11
F7007 H11
F7009 H11
F7011 H11
F7013 H10
F7015 H10
F7017 H10
F7019 H9
F7021 H9
F7022 H9
F7023 H9
F7024 H9
F7025 H9
F7026 H8
F7028 H8
F7030 H8
F900 A6
F902 B1
F903 B1
F904 B1
F905 C1
F906 C1
F907 C1
F908 D1
F909 D1
F910 D1
F911 D1
F912 E2
F913 E1
F914 D1
I901 A1
I905 B3
I906 B3
I907 A3
I909 B4
I914 D5
I918 G4
I921 F3
I922 F4
I925 H2
I947 E4
I951 D8
I952 D10
I954 G4
I955 C8
I956 E9
I957 C7
I958 E7
I960 A6
I961 A6
I964 C8
I966 D13
I967 D13
I969 E3
I972 B8
I974 E5
I975 G5
I981 B7
I982 B7
c900 G6

View Selector Audio (SF) - TV Board (TVBAD)

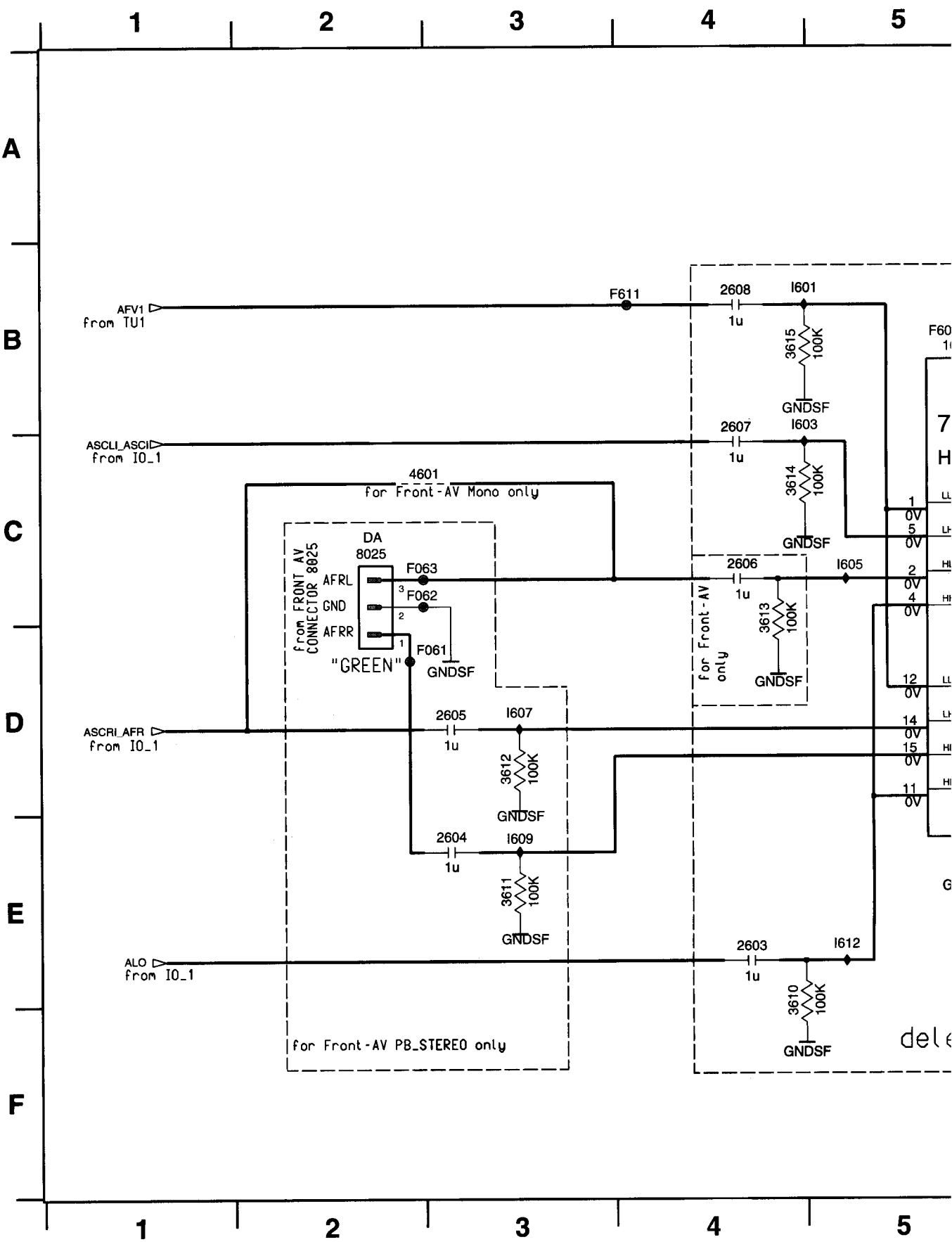

	Interconnections														
Circuit	ACO	AF	AF2	AIO1	AIO2	AL	AMP	AP	COTV	CVB	DE	DOSCD	HA	HPAV	IO_1
page	3-29	3-22	3-30	3-16	3-17	3-23	3-13	3-21	3-14	3-19	3-18	3-32	3-26	3-27	3-11
Circuit	KB1D	KB2D	LS	MFSWD	PS (RUB)	PS (TVB)	PT	SF	SFD	TU1	TU2	TV	VS	VSEC	
page	3-33	3-34	3-8	3-34	3-15	3-7	3-28	3-12	3-31	3-9	3-20	3-10	3-24	3-25	

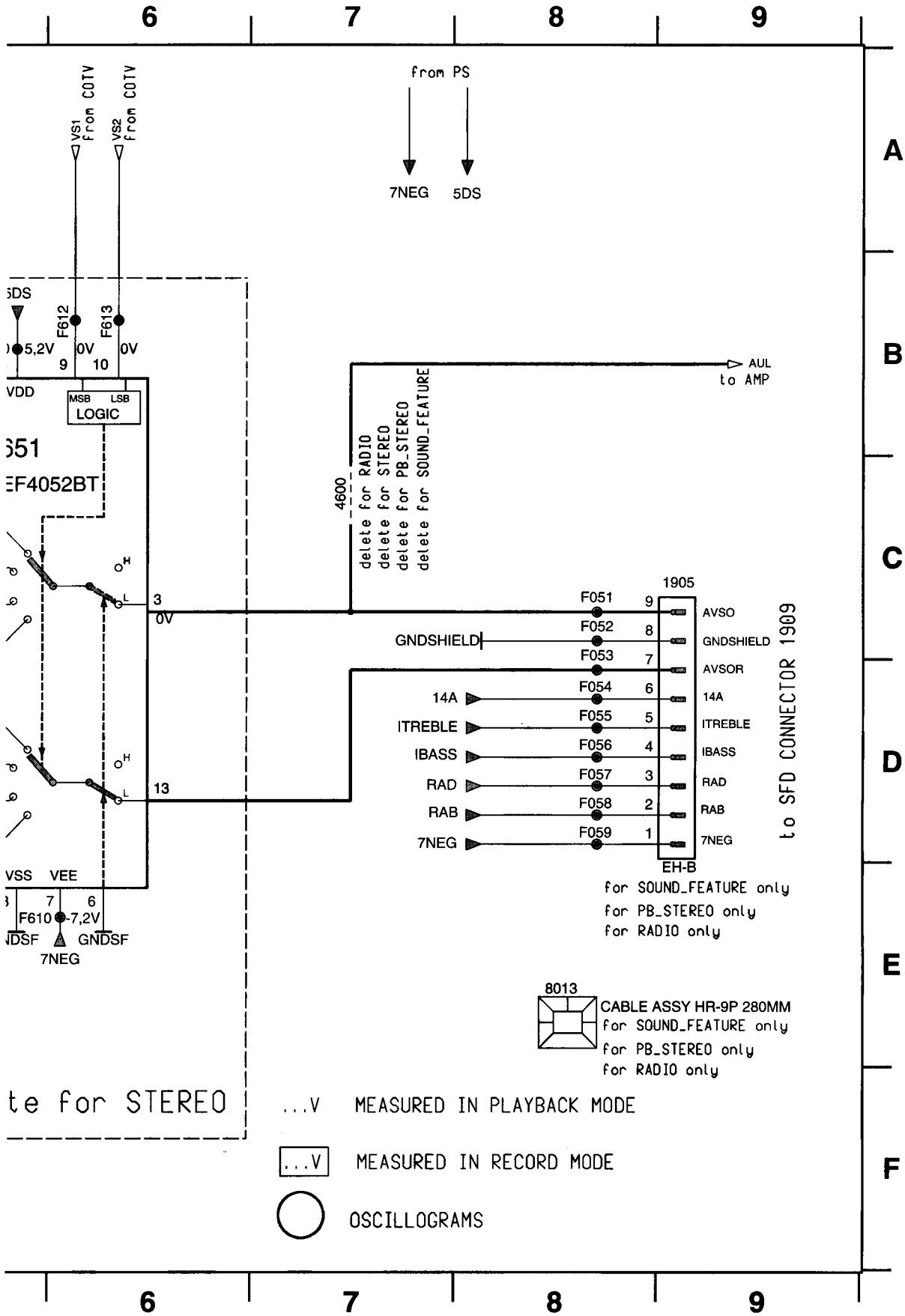

1905 C9
2603 E4
2604 E3
2605 D3
2606 C4
2607 B4
2608 B4
3610 E4
3611 E3
3612 D3
3613 C4
3614 C4
3615 B4
4600 C7
4601 C2
7651 C5
8013 E8
8025 C2
F051 C8
F052 C8
F053 C8
F054 D8
F055 D8
F056 D8
F057 D8
F058 D8
F059 D8
F061 D3
F062 C2
F063 C2
F600 B5
F610 E6
F611 B4
F612 B6
F613 B6
I601 B4
I603 B4
I605 C5
I607 D3
I609 E3
I612 E5

Amplifier (AMP) - TV Board (TVBAD)

0450 A3	2454 B3	2458 D8	2462 C9	3450 D3	3454 D6	3458 D4	3462 D8	3466 B7	3470 B2	3474 C9	4453 D7
2451 E4	2455 A5	2459 E8	2463 E5	3451 C6	3455 D5	3459 E7	3463 C7	3467 E6	3471 D2	4450 B9	4454 B7
2452 C3	2456 A5	2460 B5	2464 D4	3452 C6	3456 E5	3460 D8	3464 C8	3468 B1	3472 D4	4451 C2	6450 C5
2453 C3	2457 D7	2461 C5	2465 D4	3453 E6	3457 E5	3461 D8	3465 D6	3469 D1	3473 C9	4452 A4	6451 C6

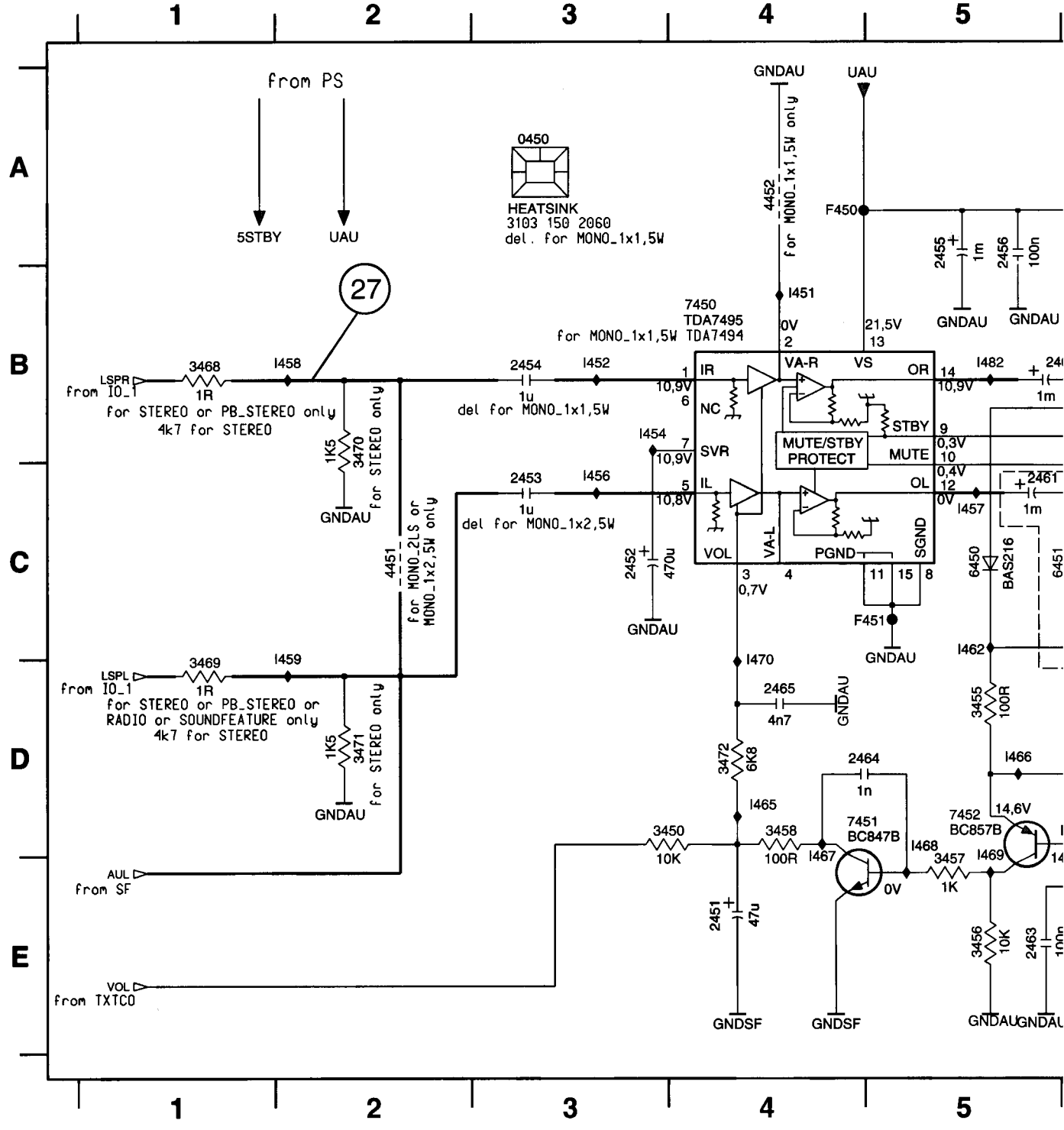

	Interconnections														
Circuit	ACO	AF	AF2	AIO1	AIO2	AL	AMP	AP	COTV	CVB	DE	DOSCD	HA	HPAV	IO_1
page	3-29	3-22	3-30	3-16	3-17	3-23	3-13	3-21	3-14	3-19	3-18	3-32	3-26	3-27	3-11
Circuit	KB1D	KB2D	LS	MFSWD	PS (RUB)	PS (TVB)	PT	SF	SFD	TU1	TU2	TV	VS	VSEC	
page	3-33	3-34	3-8	3-34	3-15	3-7	3-28	3-12	3-31	3-9	3-20	3-10	3-24	3-25	

6452 E7	6456 D9	7453 D7	9453 E9	F073 A9	I452 B3	I456 C3	I460 D7	I465 D4	I469 D5	I475 C8	I480 D9
6453 C8	7450 B4	7454 C7	9457 E8	F450 A4	I453 B7	I457 C5	I462 C5	I466 D5	I470 C4	I477 D7	I481 E8
6454 C9	7451 D5	8026 A10	F071 A9	F451 C5	I454 B3	I458 B2	I463 D6	I467 D4	I472 C7	I478 D9	I482 B5
6455 D9	7452 D5	9452 D9	F072 A9	I451 B4	I455 B6	I459 C2	I464 D6	I468 D5	I473 C8	I479 D10	c450 E10

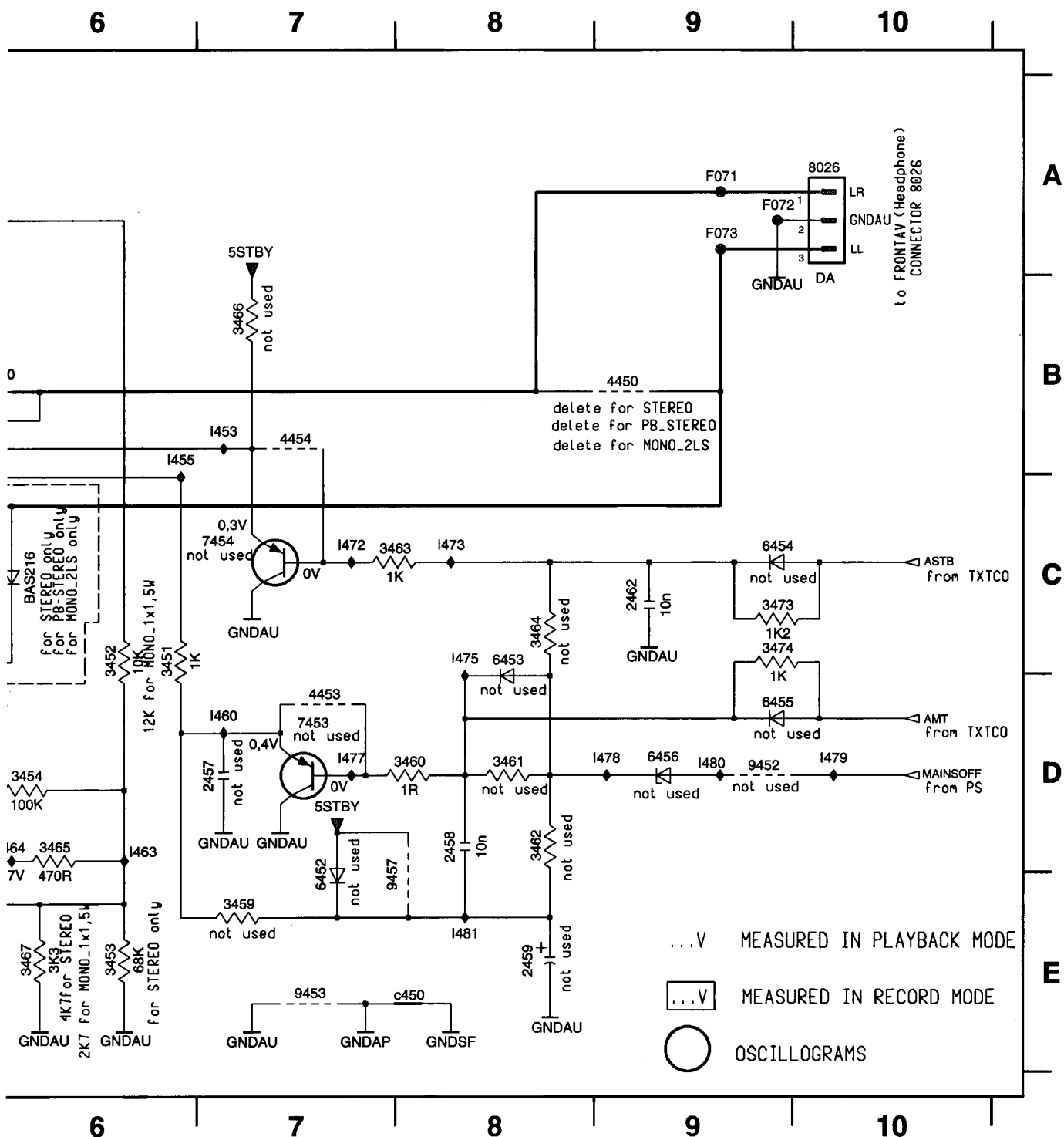

Teletext Controller (COTV) - TV Board (TVBAD)

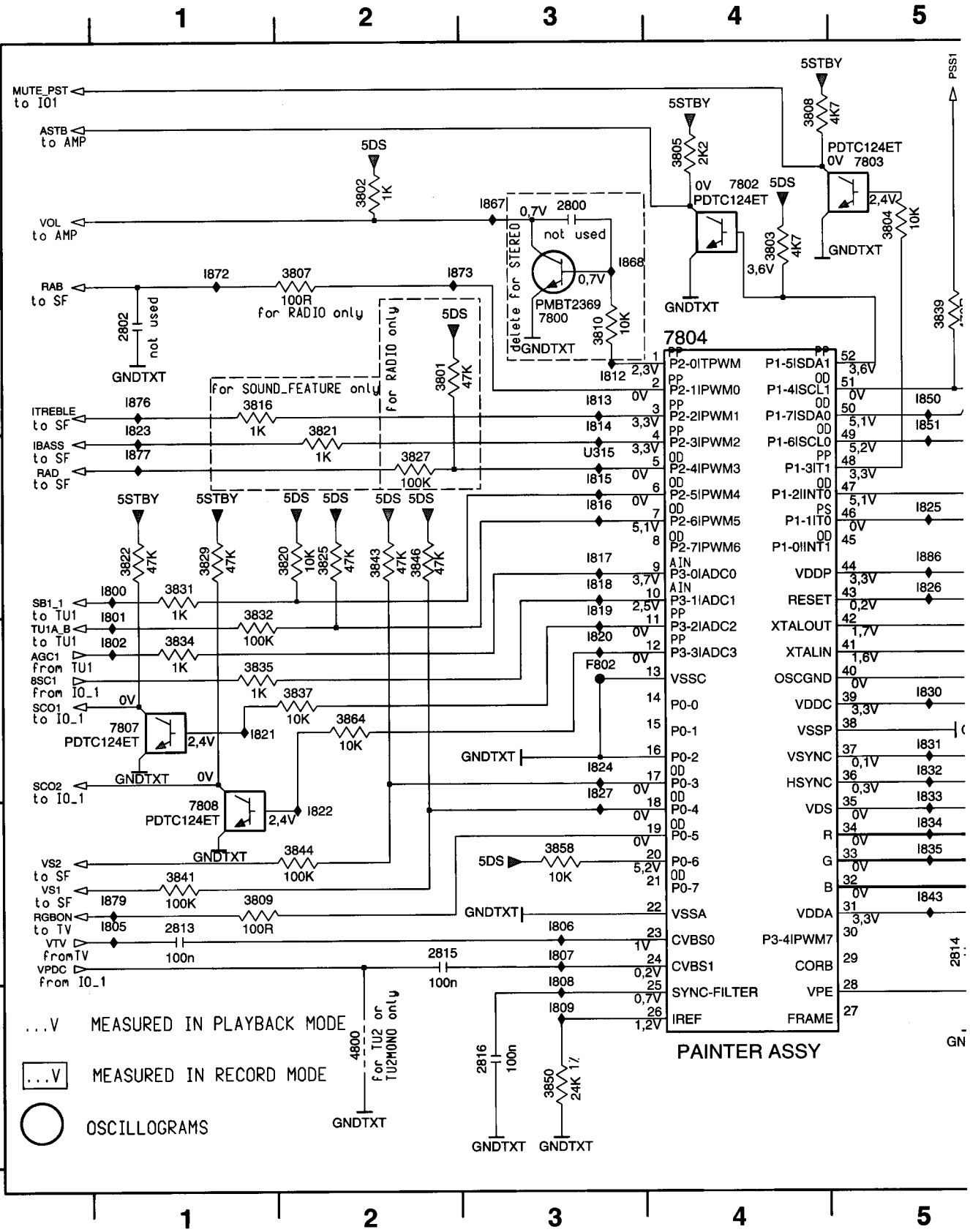

	Interconnections														
Circuit	ACO	AF	AF2	AIO1	AIO2	AL	AMP	AP	COTV	CVB	DE	DOSCD	HA	HPAV	IO_1
page	3-29	3-22	3-30	3-16	3-17	3-23	3-13	3-21	3-14	3-19	3-18	3-32	3-26	3-27	3-11
Circuit	KB1D	KB2D	LS	MFSWD	PS (RUB)	PS (TVB)	PT	SF	SFD	TU1	TU2	TV	VS	VSEC	
page	3-33	3-34	3-8	3-34	3-15	3-7	3-28	3-12	3-31	3-9	3-20	3-10	3-24	3-25	

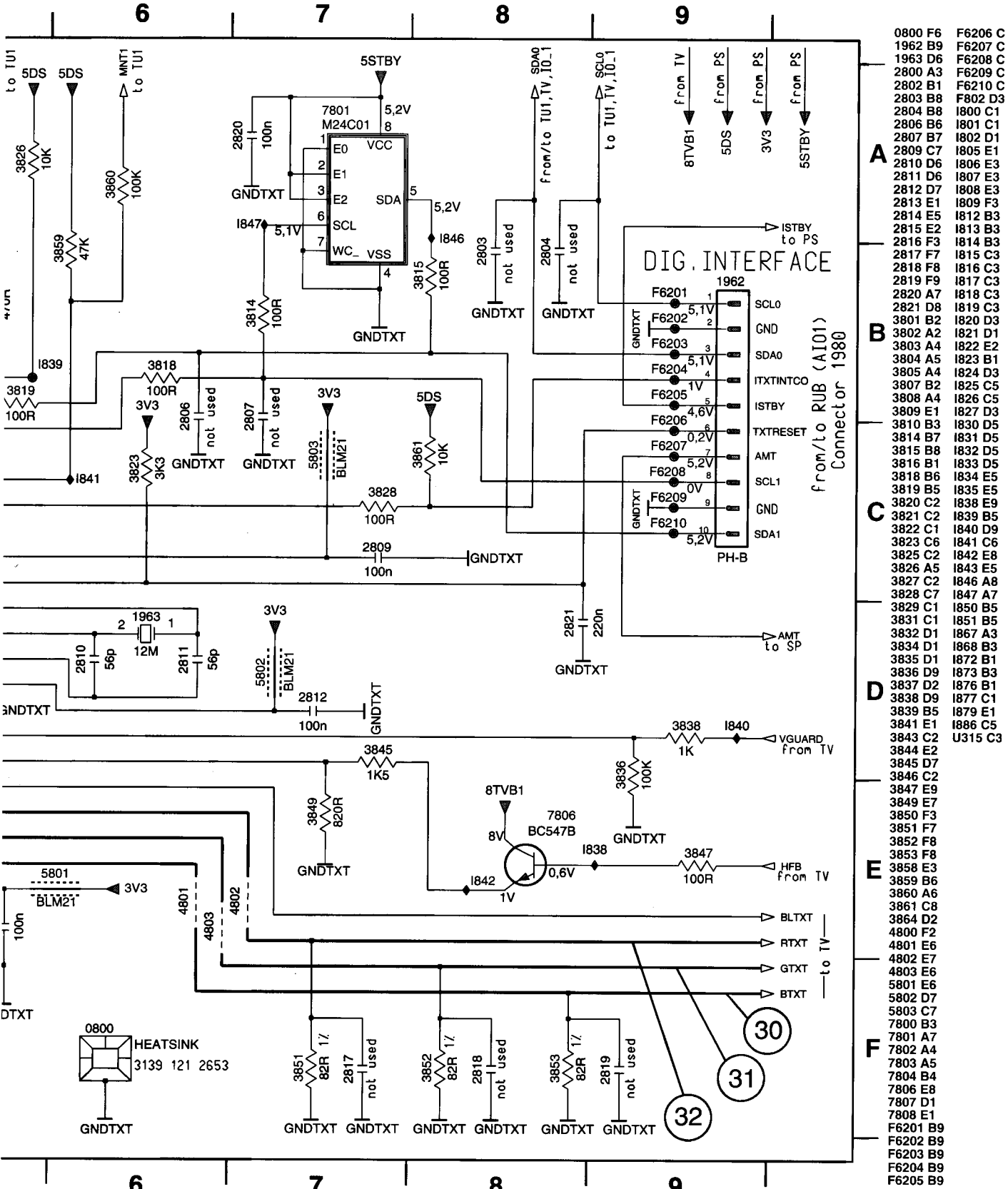

0800 F6 F6206 C
1962 B9 F6207 C
1963 D6 F6208 C
2800 A3 F6209 C
2802 B1 F6210 C
2803 B8 F802 D3
2804 B8 I800 C1
2806 B6 I801 C1
2807 B7 I802 D1
2809 C7 I805 E1
A 2810 D6 I806 E3
2811 D6 I807 E3
2812 D7 I808 E3
2813 E1 I809 F3
2814 E5 I812 B3
2815 E2 I813 B3
2816 F3 I814 B3
2817 F7 I815 C3
2818 F8 I816 C3
2819 F9 I817 C3
2820 A7 I818 C3
2821 D8 I819 C3
3801 B2 I820 D3
B 3802 A2 I821 D1
3803 A4 I822 E2
3804 A5 I823 B1
3805 A4 I824 D3
3807 B2 I825 C5
3808 A4 I826 C5
3809 E1 I827 D3
3810 B3 I830 D5
3814 B7 I831 D5
3815 B8 I832 D5
3816 B1 I833 D5
3818 B6 I834 E5
3819 B5 I835 E5
3820 C2 I838 E9
C 3821 C2 I839 B5
3822 C1 I840 D9
3823 C6 I841 C6
3825 C2 I842 E8
3826 A5 I843 E5
3827 C2 I846 A8
3828 C7 I847 A7
3829 C1 I850 B5
3831 C1 I851 B5
3832 D1 I867 A3
3834 D1 I868 B3
3835 D1 I872 B1
3836 D9 I873 B3
D 3837 D2 I876 B1
3838 D9 I877 C1
3839 B5 I879 E1
3841 E1 I886 C5
3843 C2 U315 C3
3844 E2
3845 D7
3846 C2
3847 E9
3849 E7
3850 F3
3851 F7
3852 F8
3853 F8
E 3858 E3
3859 B6
3860 A6
3861 C8
3864 D2
4800 F2
4801 E6
4802 E7
4803 E6
5801 E6
5802 D7
5803 C7
7800 B3
F 7801 A7
7802 A4
7803 A5
7804 B4
7806 E8
7807 D1
7808 E1
F6201 B9
F6202 B9
F6203 B9
F6204 B9
F6205 B9

Power Supply (PS) - Recorder Unit Board (RUBAD)

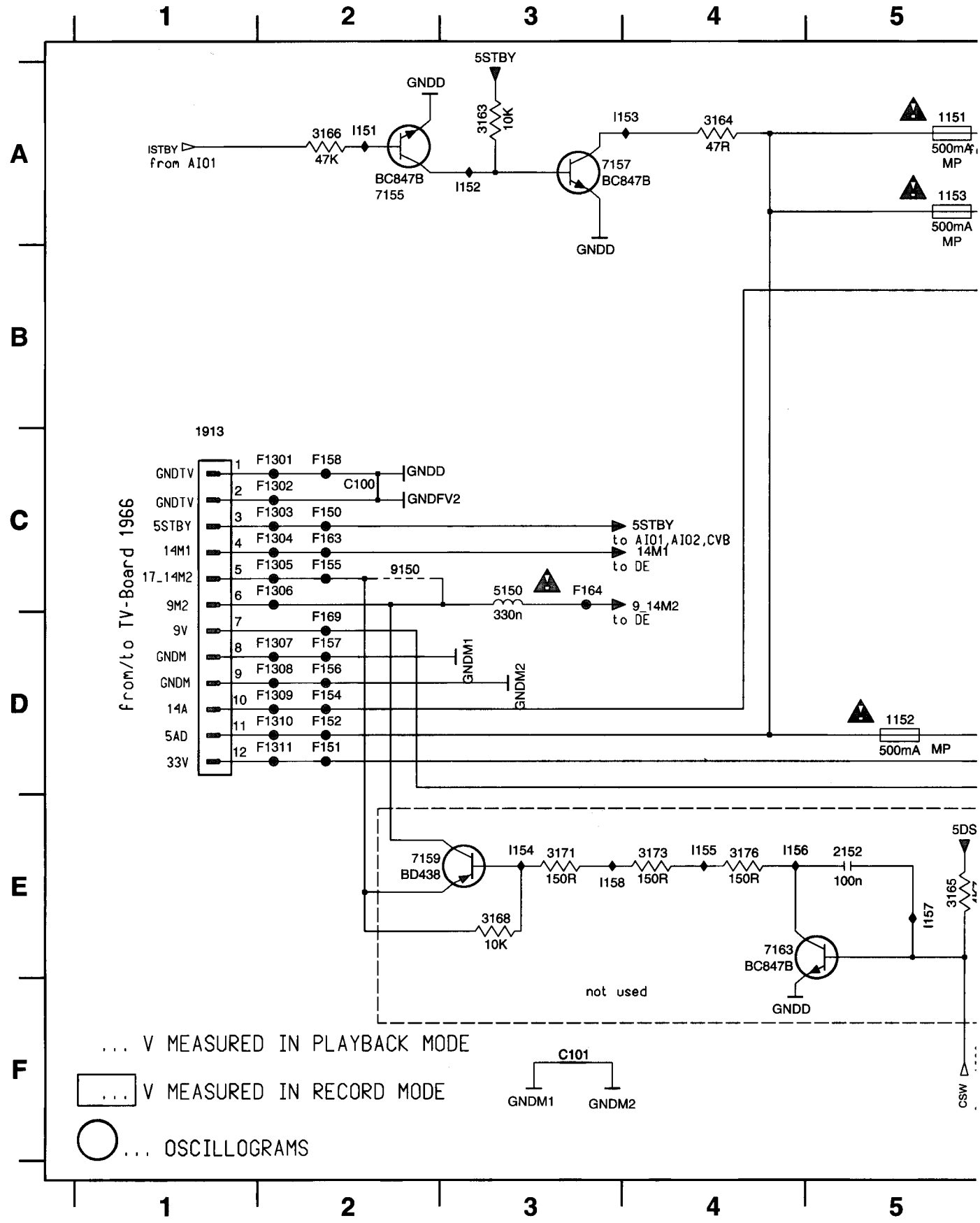

	Interconnections														
Circuit	ACO	AF	AF2	AIO1	AIO2	AL	AMP	AP	COTV	CVB	DE	DOSCD	HA	HPAV	IO_1
page	3-29	3-22	3-30	3-16	3-17	3-23	3-13	3-21	3-14	3-19	3-18	3-32	3-26	3-27	3-11
Circuit	KB1D	KB2D	LS	MFSWD	PS (RUB)	PS (TVB)	PT	SF	SFD	TU1	TU2	TV	VS	VSEC	
page	3-33	3-34	3-8	3-34	3-15	3-7	3-28	3-12	3-31	3-9	3-20	3-10	3-24	3-25	

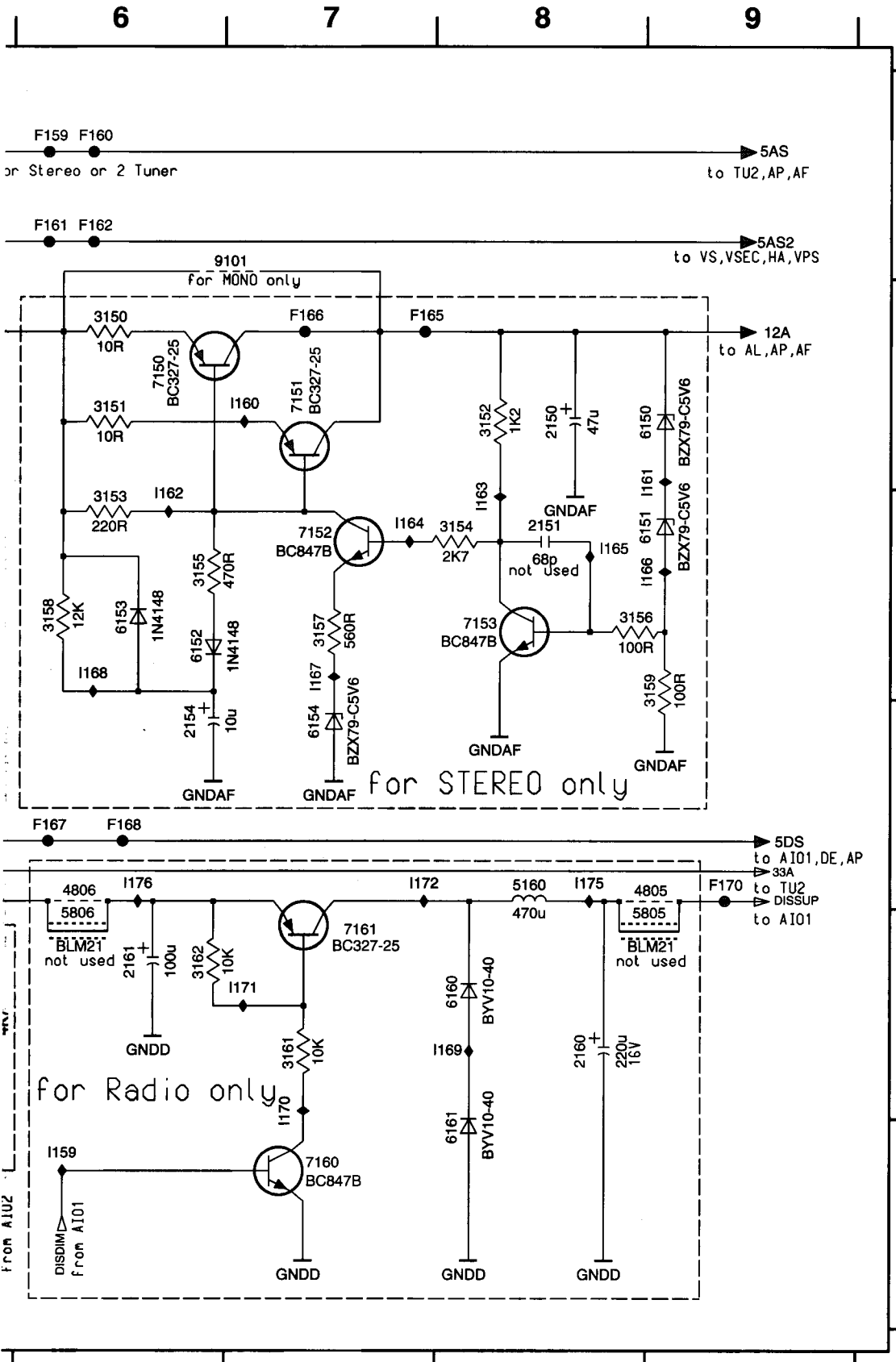

1151 A5	F168 D6
1152 D5	F169 D2
1153 A5	F170 D9
1913 C1	I151 A2
2150 B8	I152 A3
2151 C8	I153 A4
2152 E5	I154 E3
2154 D6	I155 E4
2160 E8	I156 E4
2161 E6	I157 E5
3150 B6	I158 E3
3151 B6	I159 F6
3152 B8	I160 B7
3153 C6	I161 B8
3154 C8	I162 C6
3155 C6	I163 C8
3156 C8	I164 C7
3157 C7	I165 C8
3158 C6	I166 C8
3159 C9	I167 C7
3161 E7	I168 C6
3162 E6	I169 E8
3163 A3	I170 E7
3164 A4	I171 E7
3165 E5	I172 D7
3166 A2	I175 D8
3168 E3	I176 D6
3171 E3	
3173 E4	
3176 E4	
4805 D9	
4806 D6	
5150 C3	
5160 D8	
5805 E9	
5806 E6	
6150 B9	
6151 C9	
6152 C6	
6153 C6	
6154 D7	
6160 E8	
6161 F8	
7150 B6	
7151 B7	
7152 C7	
7153 C8	
7155 A2	
7157 A3	
7159 E3	
7160 F7	
7161 E7	
7163 E4	
9101 A7	
9150 C2	
C100 C2	
C101 F3	
F1301 C2	
F1302 C2	
F1303 C2	
F1304 C2	
F1305 C2	
F1306 C2	
F1307 D2	
F1308 D2	
F1309 D2	
F1310 D2	
F1311 D2	
F150 C2	
F151 D2	
F152 D2	
F154 D2	
F155 C2	
F156 D2	
F157 D2	
F158 C2	
F159 A6	
F160 A6	
F161 A6	
F162 A6	
F163 C2	
F164 C3	
F165 B7	
F166 B7	
F167 D6	

Central Control 1 (AIO1) - Recorder Unit Board (RUBAD)

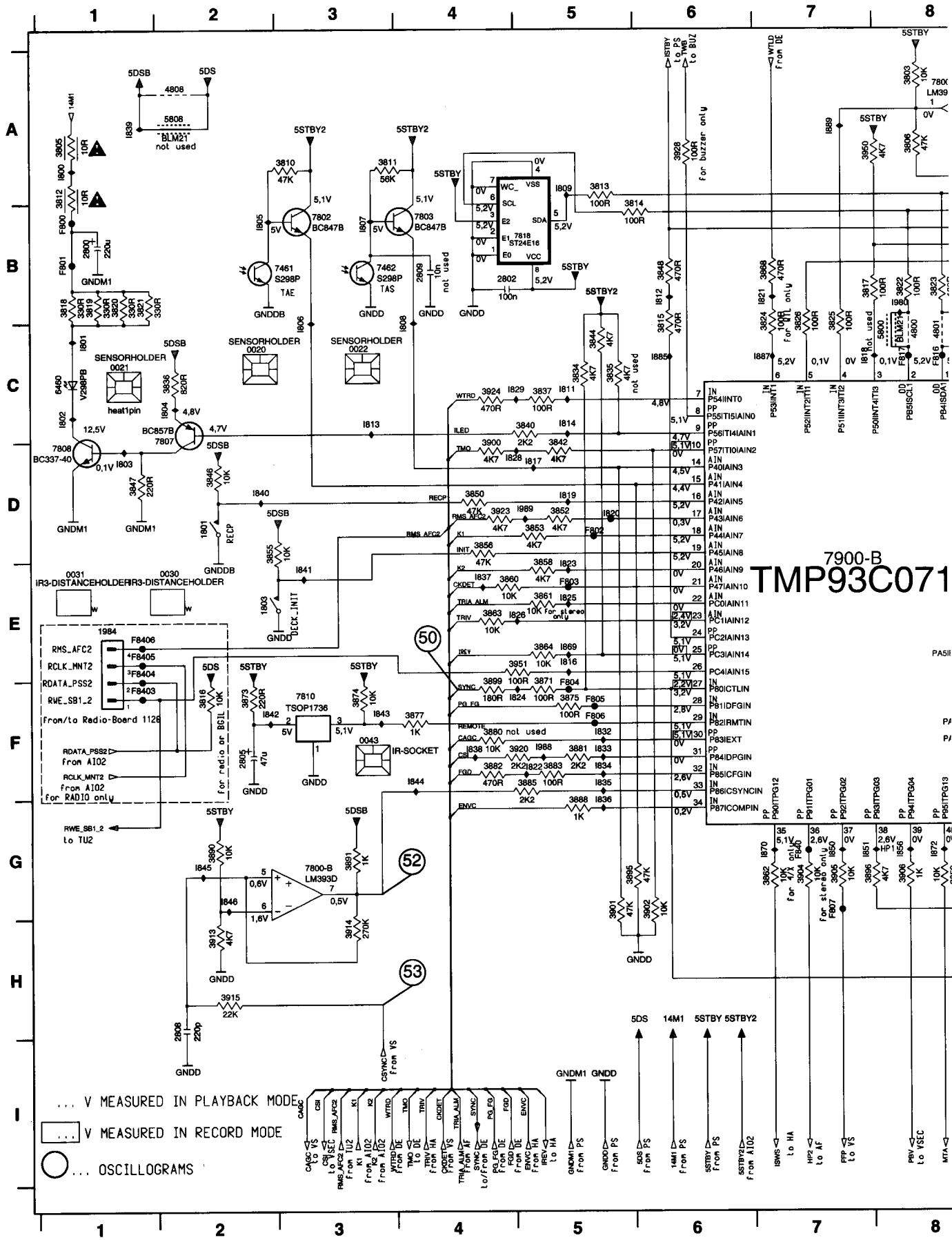

Interconnections														
Circuit	ACO	AF	AF2	AIO1	AIO2	AL	AMP	AP	COTV	CVB	DE	DOSCD	HA	HPAV	IO_1
page	3-29	3-22	3-30	3-16	3-17	3-23	3-13	3-21	3-14	3-19	3-18	3-32	3-26	3-27	3-11
Circuit	KB1D	KB2D	LS	MFSWD	PS (RUB)	PS (TVB)	PT	SF	SFD	TU1	TU2	TV	VS	VSEC	
page	3-33	3-34	3-8	3-34	3-15	3-7	3-28	3-12	3-31	3-9	3-20	3-10	3-24	3-25	

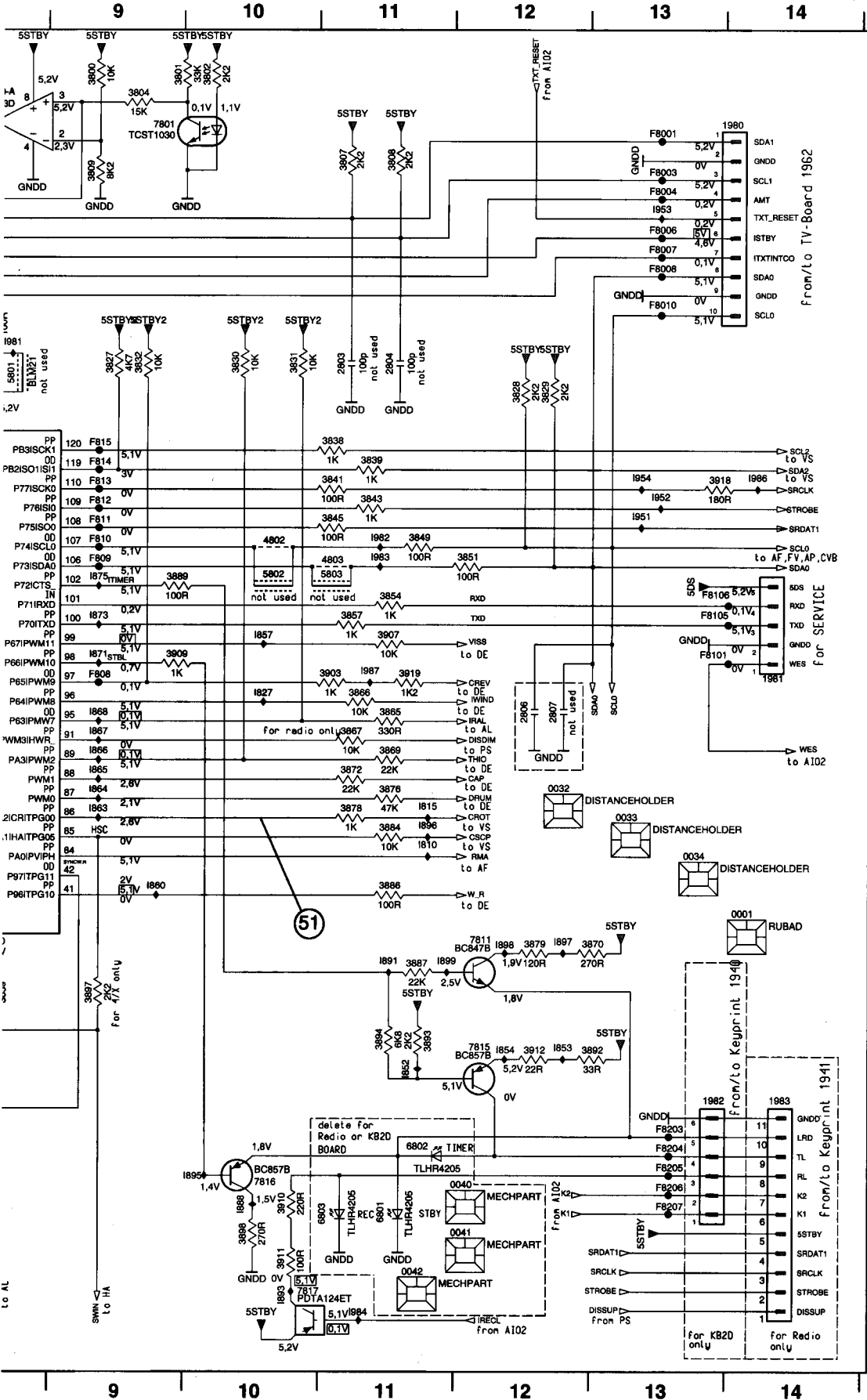

0001 G14	3907 E11	I857 E10
0020 C2	3909 E9	I860 F9
0021 C1	3910 I10	I863 F9
0022 C3	3911 I10	I864 F9
0030 E2	3912 H12	I865 F9
0031 E1	3913 H2	I866 E9
0032 F12	3914 H3	I867 E9
0033 F13	3915 H2	I868 E9
0034 F13	3918 C13	I869 E5
0040 I11	3919 E11	I870 G7
0041 I11	3920 F5	I871 E9
0042 I11	3923 D4	I872 G8
0043 F3	3924 C4	I873 D9
1801 D2	3928 A6	I875 D9
1803 E2	3950 A7	I885 C6
1980 A13	3951 E5	I887 C7
1981 E14	4800 C8	I888 I10
1982 H13	4801 C8	I889 A7
1983 H14	4802 D10	I891 G11
1984 E1	4803 D11	I893 I10
2800 B1	4808 A2	I895 I10
2802 B4	5800 C8	I896 F11
2803 C11	5801 C8	I897 G12
2804 C11	5802 D10	I898 G12
2805 F2	5803 D11	I899 G11
2806 E12	5808 A2	I951 D13
2807 E12	6460 C1	I952 C13
2808 H2	6801 I11	I953 A13
2809 B4	6802 H11	I954 C13
3800 A9	6803 I11	I980 B8
3801 A9	7461 B2	I981 B8
3802 A10	7462 B3	I982 D11
3803 A8	7800-A A8	I983 D11
3804 A9	7800-B G3	I984 I11
3805 A1	7801 A9	I986 C14
3806 A8	7802 B3	I987 E11
3807 A11	7803 B4	I988 F5
3808 A11	7807 C2	I989 D5
3809 A9	7808 D1	
3810 A3	7810 F3	
3811 A3	7811 G12	
3812 A1	7815 H12	
3813 A5	7816 I10	
3814 B6	7817 I11	
3815 C6	7818 B5	
3816 F2	7900-B E7	
3817 B7	F800 B1	
3818 B1	F8001 A13	
3819 B1	F8003 A13	
3820 B1	F8004 A13	
3821 B1	F8006 B13	
3822 B8	F8007 B13	
3823 B8	F8008 B13	
3824 C7	F801 B1	
3825 C7	F8010 B13	
3826 C7	F802 D5	
3827 C9	F803 E5	
3828 C12	F804 F5	
3829 C12	F805 F5	
3830 C10	F806 F5	
3831 C10	F807 G7	
3832 C9	F808 E9	
3834 C5	F809 D9	
3835 C5	F810 D9	
3836 C2	F8101 E13	
3837 C5	F8105 D13	
3838 C11	F8106 D13	
3839 C11	F811 D9	
3840 C5	F812 D9	
3841 C11	F813 C9	
3842 D5	F814 C9	
3843 D11	F815 C9	
3844 C5	F816 C8	
3845 D11	F817 C8	
3846 D2	F8203 H13	
3847 D1	F8204 H13	
3848 B6	F8205 H13	
3849 D11	F8206 I13	
3850 D4	F8207 I13	
3851 D12	F840 G7	
3852 D5	F8403 F1	
3853 D5	F8404 E1	
3854 D11	F8405 E1	
3855 D2	F8406 E1	
3856 D4	I800 A1	
3857 D11	I801 C1	
3858 E5	I802 C1	
3859 G8	I803 D1	
3860 E4	I804 C2	
3861 E5	I805 B2	
3862 G7	I806 C3	
3863 E4	I807 B3	
3864 E5	I808 C4	
3865 E11	I809 A5	
3866 E11	I810 F11	
3867 E11	I811 C5	
3868 B7	I812 B6	
3869 E11	I813 C3	
3870 G13	I814 C5	
3871 F5	I815 F11	
3872 F11	I816 E5	
3873 F2	I817 D5	
3874 F3	I818 C7	
3875 F5	I819 D5	
3876 F11	I820 D5	
3877 F4	I821 B7	
3878 F11	I822 F5	
3879 G12	I823 E5	
3880 F4	I824 F5	
3881 F5	I825 E5	
3882 F4	I826 E5	
3883 F5	I827 E10	
3884 F11	I828 D4	
3885 F5	I829 C5	
3886 F11	I832 F5	
3887 G11	I833 F5	
3888 G5	I834 F5	
3889 D9	I835 F5	
3890 G2	I836 G5	
3891 G3	I837 E4	
3892 H13	I838 F4	
3893 H11	I839 A1	
3894 H11	I840 D2	
3895 G5	I841 E3	
3896 G7	I842 F2	
3897 G9	I843 F3	
3898 I10	I844 F4	
3899 F4	I845 G2	
3900 D4	I846 G2	
3901 G5	I850 G7	
3902 G6	I851 G7	
3903 E11	I852 H11	
3904 G7	I853 H12	
3905 G7	I854 H12	
3906 G8	I856 G8	

Central Control 2 (AIO2) - Recorder Unit Board (RUBAD)

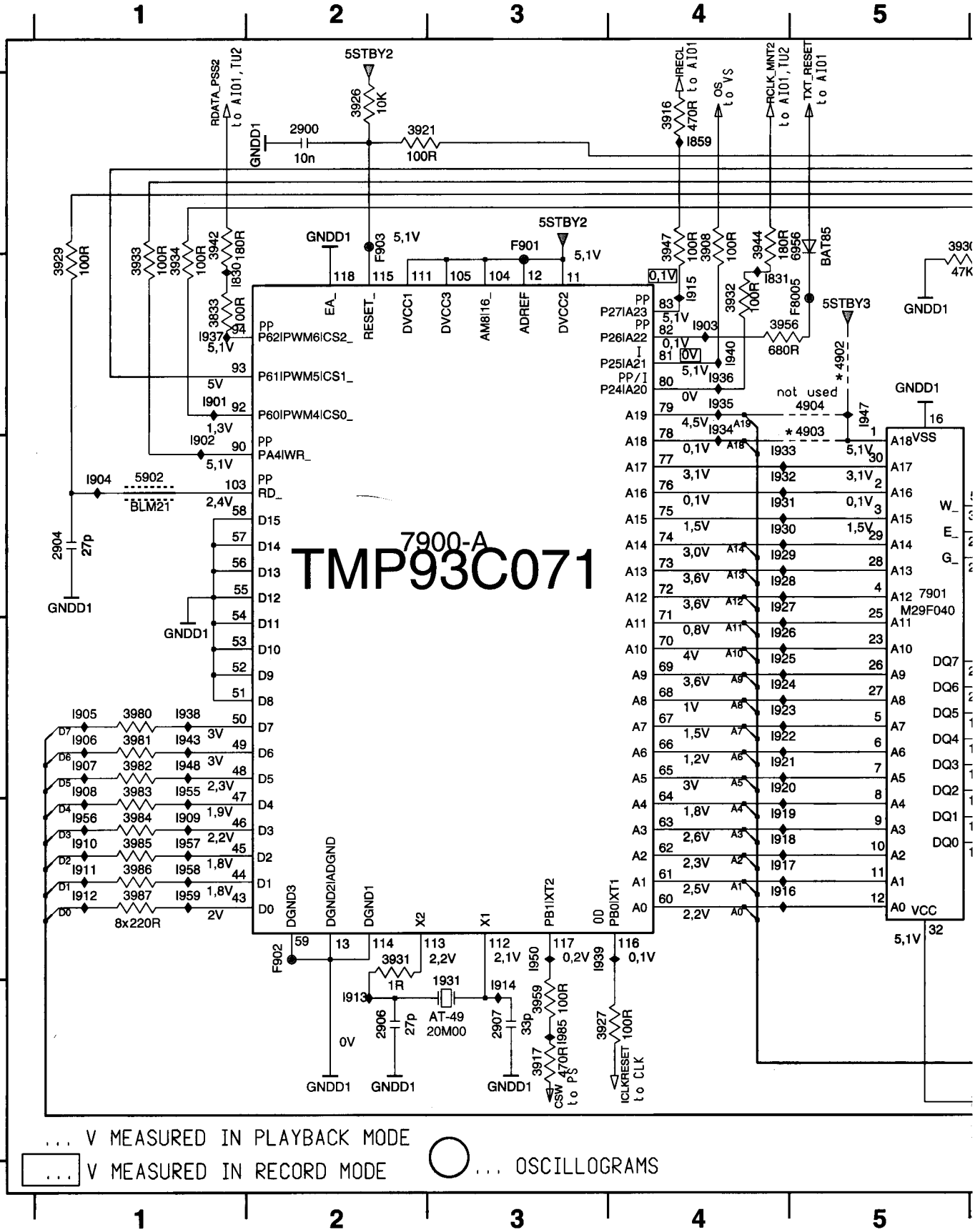

	Interconnections														
Circuit	ACO	AF	AF2	AIO1	AIO2	AL	AMP	AP	COTV	CVB	DE	DOSCD	HA	HPAV	IO_1
page	3-29	3-22	3-30	3-16	3-17	3-23	3-13	3-21	3-14	3-19	3-18	3-32	3-26	3-27	3-11
Circuit	KB1D	KB2D	LS	MFSWD	PS (RUB)	PS (TVB)	PT	SF	SFD	TU1	TU2	TV	VS	VSEC	
page	3-33	3-34	3-8	3-34	3-15	3-7	3-28	3-12	3-31	3-9	3-20	3-10	3-24	3-25	

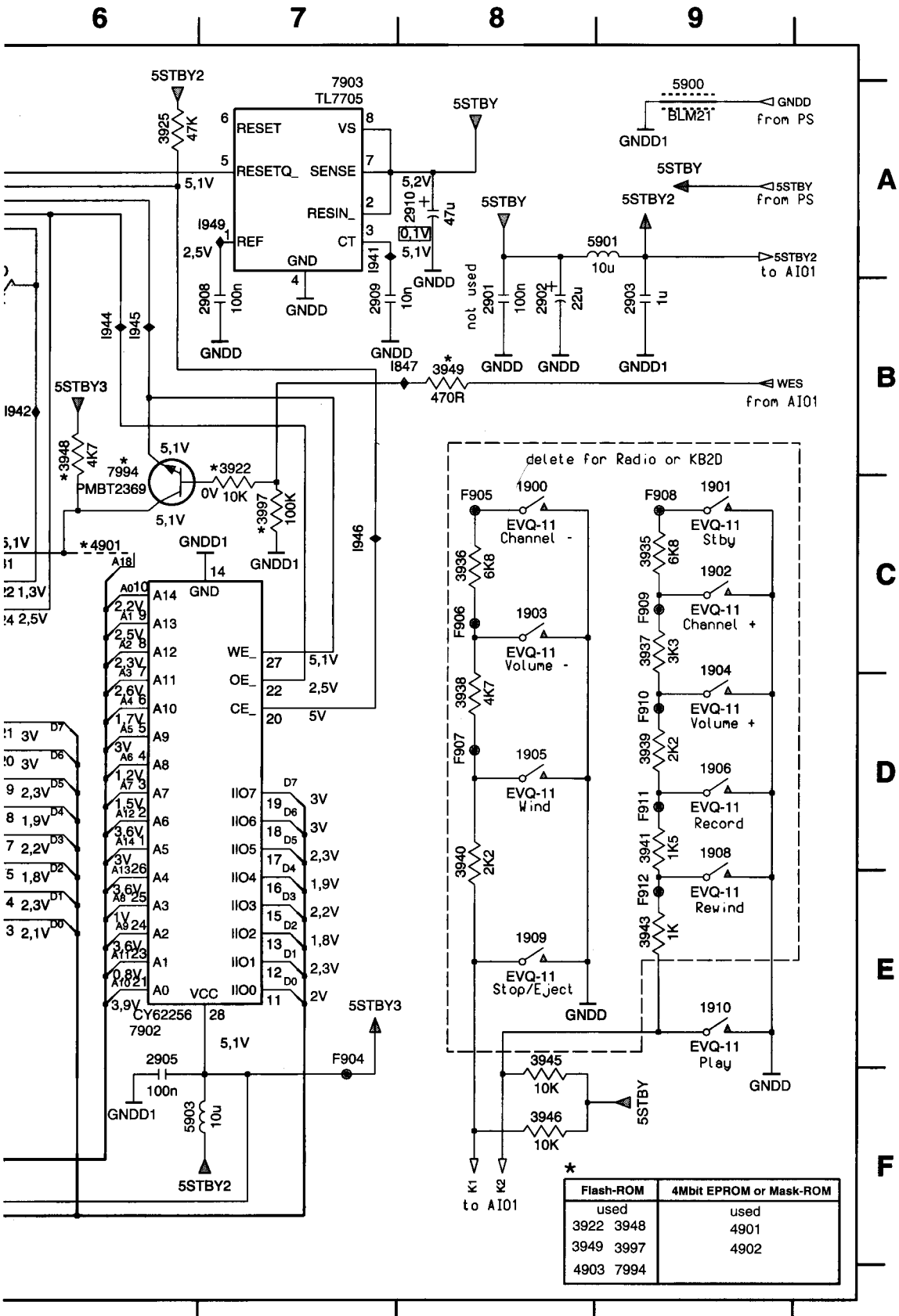

1900 C8
1901 C9
1902 C9
1903 C8
1904 D9
1905 D8
1906 D9
1908 D9
1909 E8
1910 E9
1931 F3
2900 A2
2901 B8
2902 B8
2903 B9
2904 C1
2905 E6
2906 F2
2907 F3
2908 B7
2909 B7
2910 A8
3833 B1
3908 A4
3916 A4
3917 F3
3921 A2
3922 B7
3925 A6
3926 A2
3927 F3
3929 B1
3930 A5
3931 E2
3932 B4
3933 B1
3934 B1
3935 C9
3936 C8
3937 C9
3938 D8
3939 D9
3940 D8
3941 D9
3942 A1
3943 E9
3944 A4
3945 E8
3946 F8
3947 A4
3948 B6
3949 B8
3956 B4
3959 F3
3980 D1
3981 D1
3982 D1
3983 D1
3984 E1
3985 E1
3986 E1
3987 E1
3997 C7
4901 C6
4902 B5
4903 C5
4904 B5
5900 A9
5901 A9
5902 C1
5903 F6
6956 A5
7900-A C2
7901 C5
7902 E6
7903 A7
7994 C6
F8005 B5
F901 A3
F902 E2
F903 A2
F904 E7
F905 C8
F906 C8
F907 D8
F908 C9
F909 C9
F910 D9
F911 D9
F912 E9
I830 B1
I831 B4
I847 B8
I859 A4
I901 B1
I902 C1
I903 B4
I904 C1
I905 D1
I906 D1
I907 D1
I908 D1
I909 E1
I910 E1
I911 E1
I912 E1
I913 F2
I914 F3
I915 B4
I916 E4
I917 E4
I918 E4
I919 E4
I920 D4
I921 D4
I922 D4
I923 D4
I924 D4
I925 D4
I926 D4
I927 C4
I928 C4
I929 C4
I930 C4
I931 C4
I932 C4
I933 C4
I934 B4
I935 B4
I936 B4
I937 B1
I938 D1
I939 E3
I940 B4
I941 A7
I942 B6
I943 D1
I944 B6
I945 B6
I946 C7
I947 B5
I948 D1
I949 A7
I950 E3
I955 D1
I956 E1
I957 E1
I958 E1
I959 E1
I985 F3

Deck Electronics (DE) - Recorder Unit Board (RUBAD)

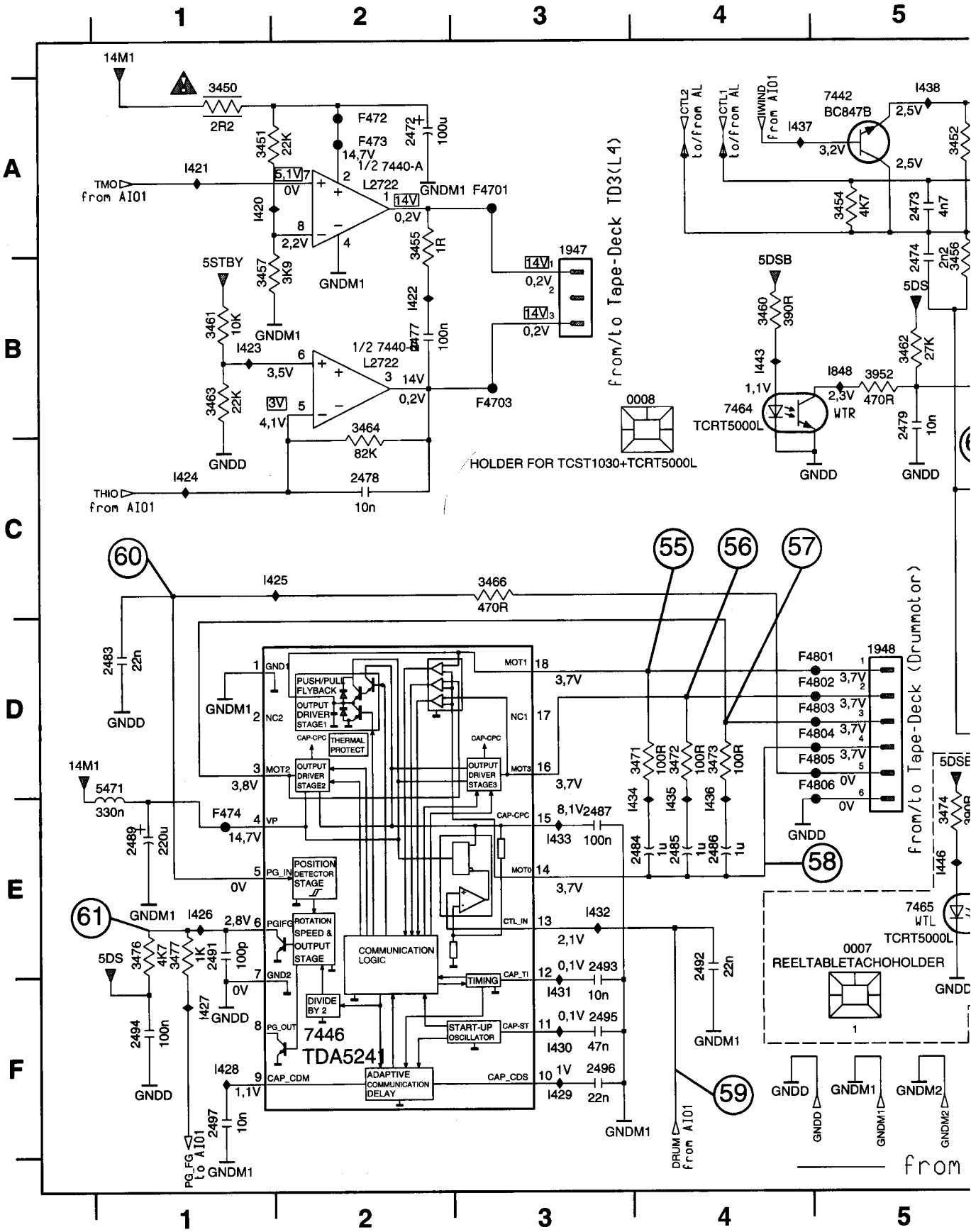

	Interconnections														
Circuit	ACO	AF	AF2	AIO1	AIO2	AL	AMP	AP	COTV	CVB	DE	DOSCD	HA	HPAV	IO_1
page	3-29	3-22	3-30	3-16	3-17	3-23	3-13	3-21	3-14	3-19	3-18	3-32	3-26	3-27	3-11
Circuit	KB1D	KB2D	LS	MFSWD	PS (RUB)	PS (TVB)	PT	SF	SFD	TU1	TU2	TV	VS	VSEC	
page	3-33	3-34	3-8	3-34	3-15	3-7	3-28	3-12	3-31	3-9	3-20	3-10	3-24	3-25	

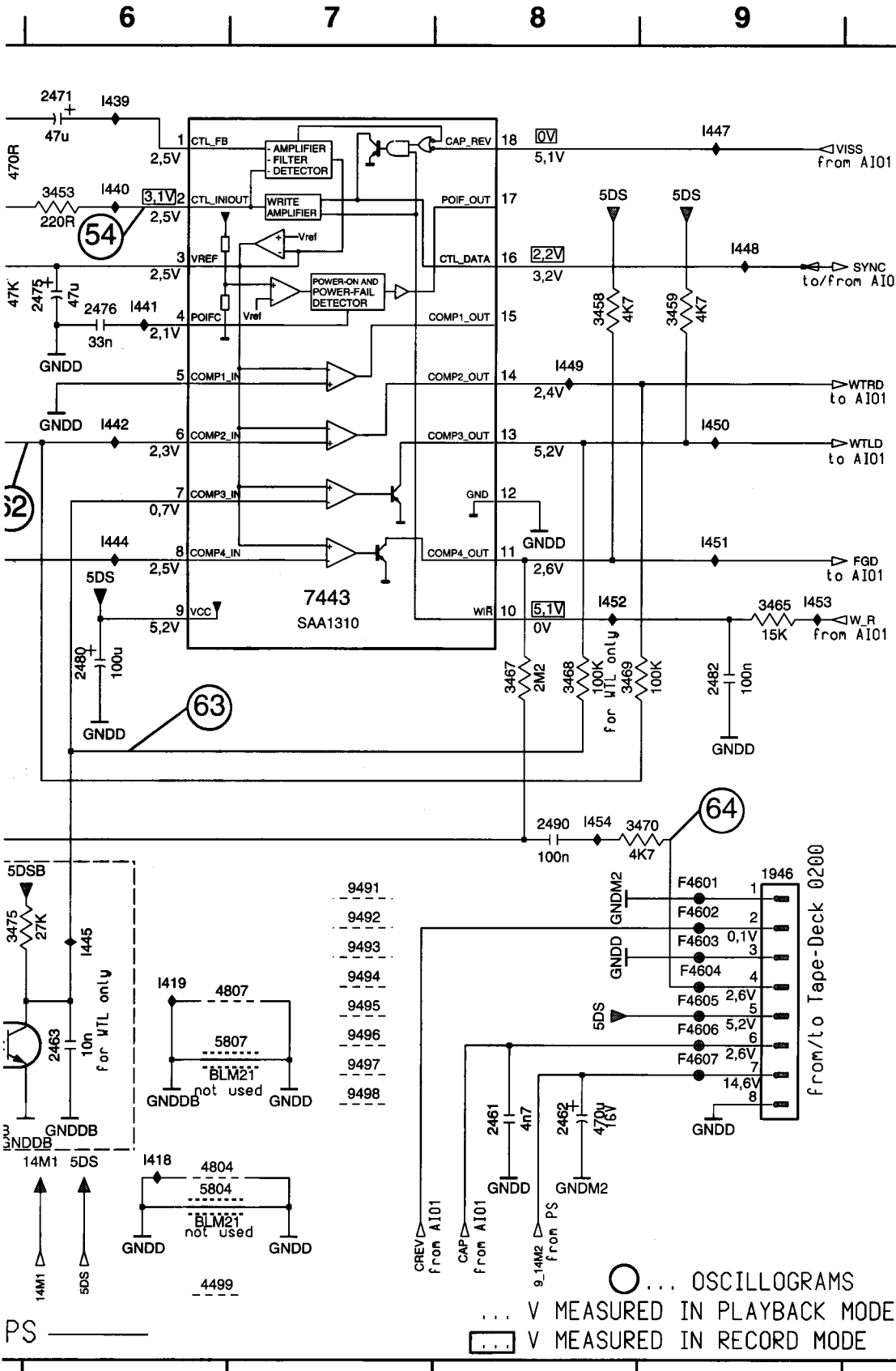

0007 E5
0008 B3
1946 D9
1947 A3
1948 D5
2461 F8
2462 F8
2463 E6
2471 A6
2472 A2
2473 A5
2474 B5
2475 B6
2476 B6
2477 B2
2478 C2
2479 B5
2480 C6
2482 C9
2483 D1
2484 E4
2485 E4
2486 E4
2487 E3
2489 E1
2490 D8
2491 E1
2492 E4
2493 E3
2494 F1
2495 F3
2496 F3
2497 F1
3450 A1
3451 A1
3452 A5
3453 A6
3454 A5
3455 A2
3456 B5
3457 B1
3458 B8
3459 B9
3460 B4
3461 B1
3462 B5
3463 B1
3464 B2
3465 C9
3466 C3
3467 C8
3468 C8
3469 C8
3470 D9
3471 D4
3472 D4
3473 D4
3474 E5
3475 E5
3476 E1
3477 E1
3952 B5
4499 F6
4804 F6
4807 E7
5471 D1
5804 F6
5807 E7
7440-A A2
7440-B B2
7442 A5
7443 C7
7446 F2
7464 B4
7465 E5
9491 D7
9492 E7
9493 E7
9494 E7
9495 E7
9496 E7
9497 E7
9498 E7
F4601 D9
F4602 E9
F4603 E9
F4604 E9
F4605 E9
F4606 E9
F4607 E9
F4701 A3
F4703 B3
F472 A2
F473 A2
F474 E1
F4801 D5
F4802 D5
F4803 D5
F4804 D5
F4805 D5
F4806 D5
I418 F6
I419 E6
I420 A1
I421 A1
I422 B2
I423 B1
I424 C1
I425 C2
I426 E1
I427 F1
I428 F1
I429 F3
I430 F3
I431 F3
I432 E3
I433 E3
I434 E3
I435 E4
I436 E4
I437 A4
I438 A5
I439 A6
I440 A6
I441 B6
I442 B6
I443 B4
I444 C6
I445 E6
I446 E5
I447 A9
I448 A9
I449 B8
I450 B9
I451 C9
I452 C8
I453 C9
I454 D8
I848 B5

Clock, VPS, Buzzer (CVB) - Recorder Unit Board (RUBAD)

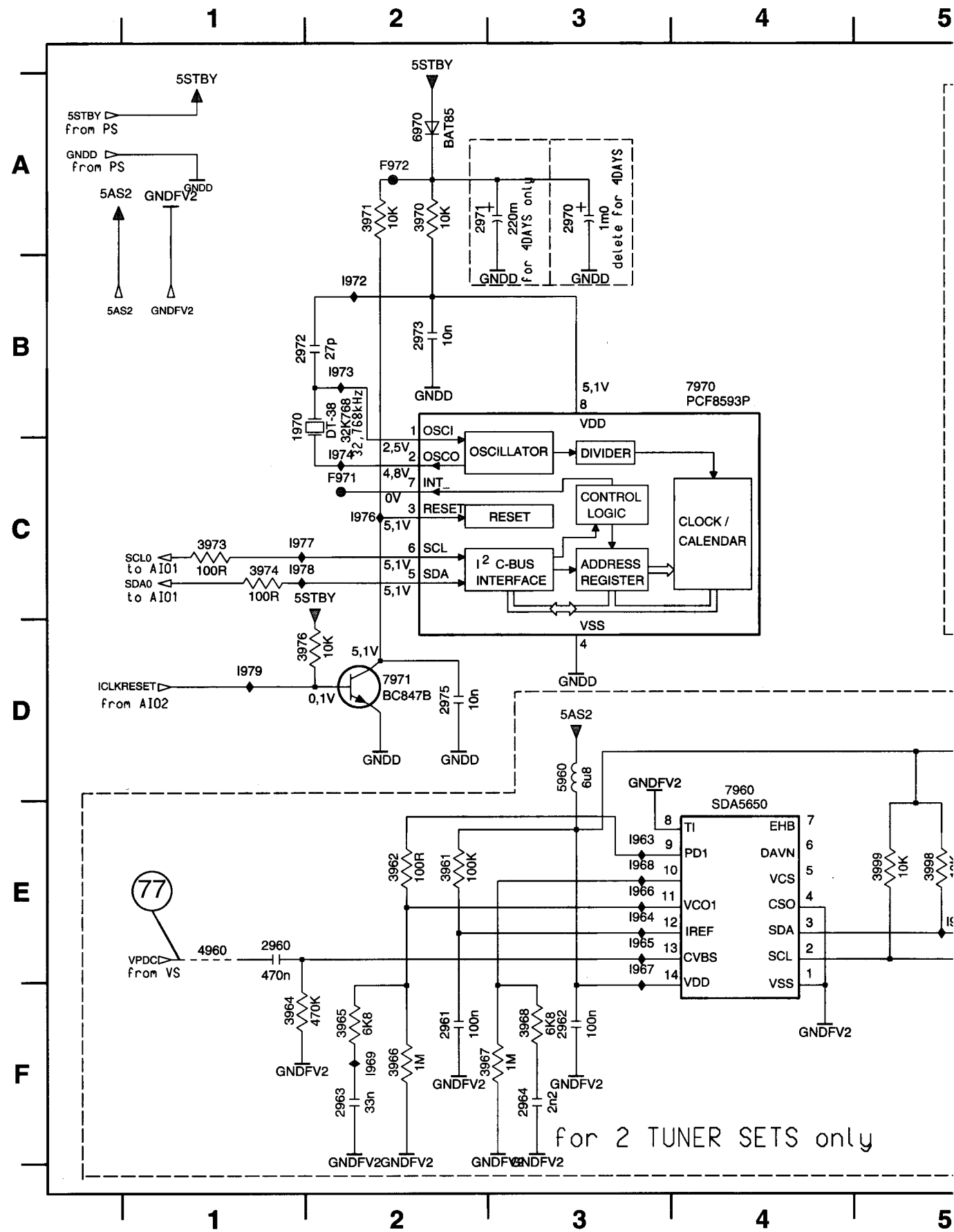

Interconnections														
Circuit	ACO	AF	AF2	AIO1	AIO2	AL	AMP	AP	COTV	CVB	DE	DOSCD	HA	HPAV	IO_1
page	3-29	3-22	3-30	3-16	3-17	3-23	3-13	3-21	3-14	3-19	3-18	3-32	3-26	3-27	3-11
Circuit	KB1D	KB2D	LS	MFSWD	PS (RUB)	PS (TVB)	PT	SF	SFD	TU1	TU2	TV	VS	VSEC	
page	3-33	3-34	3-8	3-34	3-15	3-7	3-28	3-12	3-31	3-9	3-20	3-10	3-24	3-25	

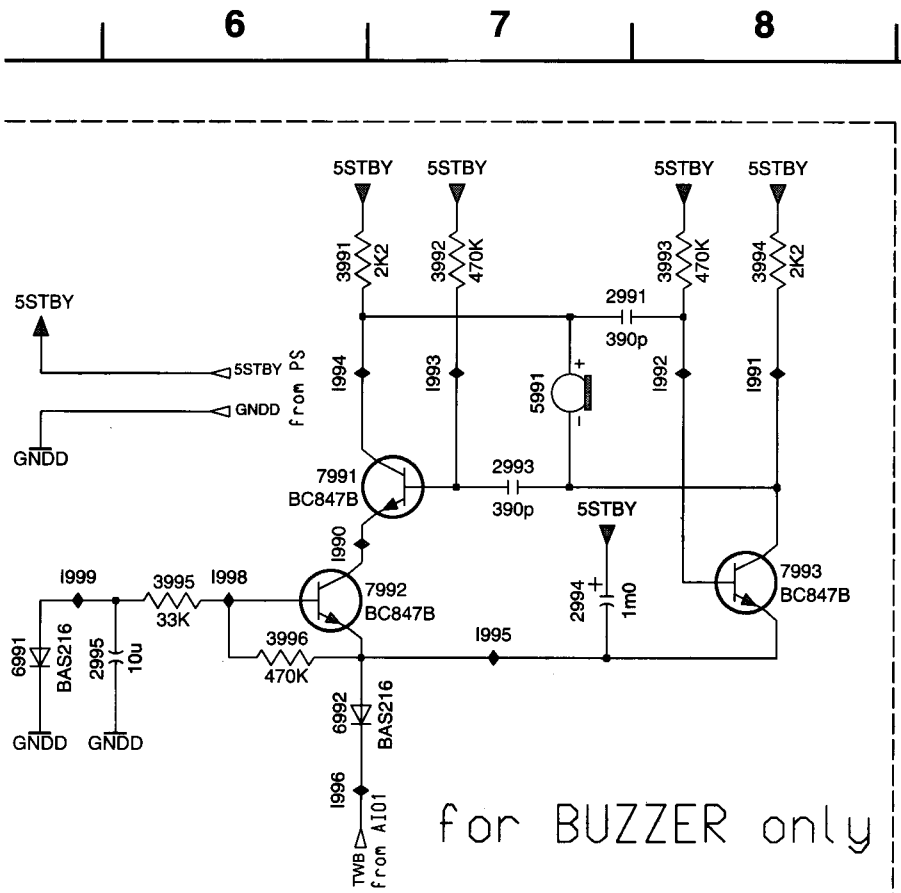

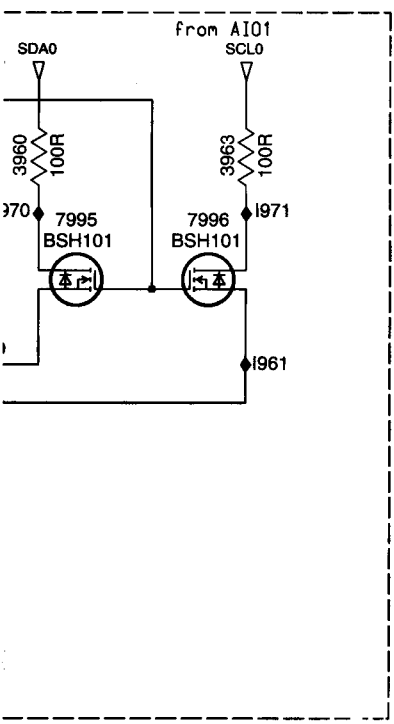

... V MEASURED IN PLAYBACK MODE

[...] V MEASURED IN RECORD MODE

... OSCILLOGRAMS

A B C D E F

1970 B1
2960 E1
2961 F2
2962 F3
2963 F2
2964 F3
2970 A3
2971 A2
2972 B1
2973 B2
2975 D2
2991 A7
2993 B7
2994 B7
2995 C6
3960 D5
3961 E2
3962 E2
3963 D6
3964 F1
3965 F2
3966 F2
3967 F3
3968 F3
3970 A2
3971 A2
3973 C1
3974 C1
3976 D2
3991 A6
3992 A7
3993 A8
3994 A8
3995 B6
3996 C6
3998 E5
3999 E5
4960 E1
5960 D3
5991 B7
6970 A2
6991 C5
6992 C6
7960 D4
7970 B4
7971 D2
7991 B6
7992 B6
7993 B8
7995 E5
7996 E6
F971 C2
F972 A2
I960 E5
I961 E6
I963 E3
I964 E3
I965 E3
I966 E3
I967 E3
I968 E3
I969 F2
I970 E5
I971 E6
I972 B2
I973 B2
I974 C2
I976 C2
I977 C1
I978 C1
I979 D1
I990 B6
I991 B8
I992 B8
I993 B7
I994 B6
I995 B7
I996 C6
I998 B6
I999 B5

Tuner 2 (TU2) - Recorder Unit Board (RUBAD)

1300 B4	2305 B1	2312 A6	2319 C2	3300 A2	3307 B5	3314 C9	3322 D4	4305 E5	5303 C2
1301 C1	2306 A1	2313 A1	2320 D5	3301 A6	3308 A3	3315 D10	3323 D8	4306 B10	5304 A1
1302 C4	2307 A8	2314 A7	2321 D10	3302 A9	3309 A7	3316 C3	3325 E3	4307 D7	5305 A8
1304 C10	2308 A9	2315 A8	2322 E8	3303 A1	3310 D6	3318 C10	4301 A4	4308 D10	5306 B4
1305 D4	2309 A6	2316 A3	2323 D8	3304 A1	3311 B9	3319 C1	4302 B2	5300 A7	5307 C4
1306 D6	2310 A5	2317 A3	2324 E5	3305 A8	3312 E6	3320 C1	4303 C3	5301 B3	5308 A2
1307 E6	2311 B6	2318 B1	2325 B2	3306 A3	3313 B9	3321 D3	4304 E6	5302 B10	6300 A2

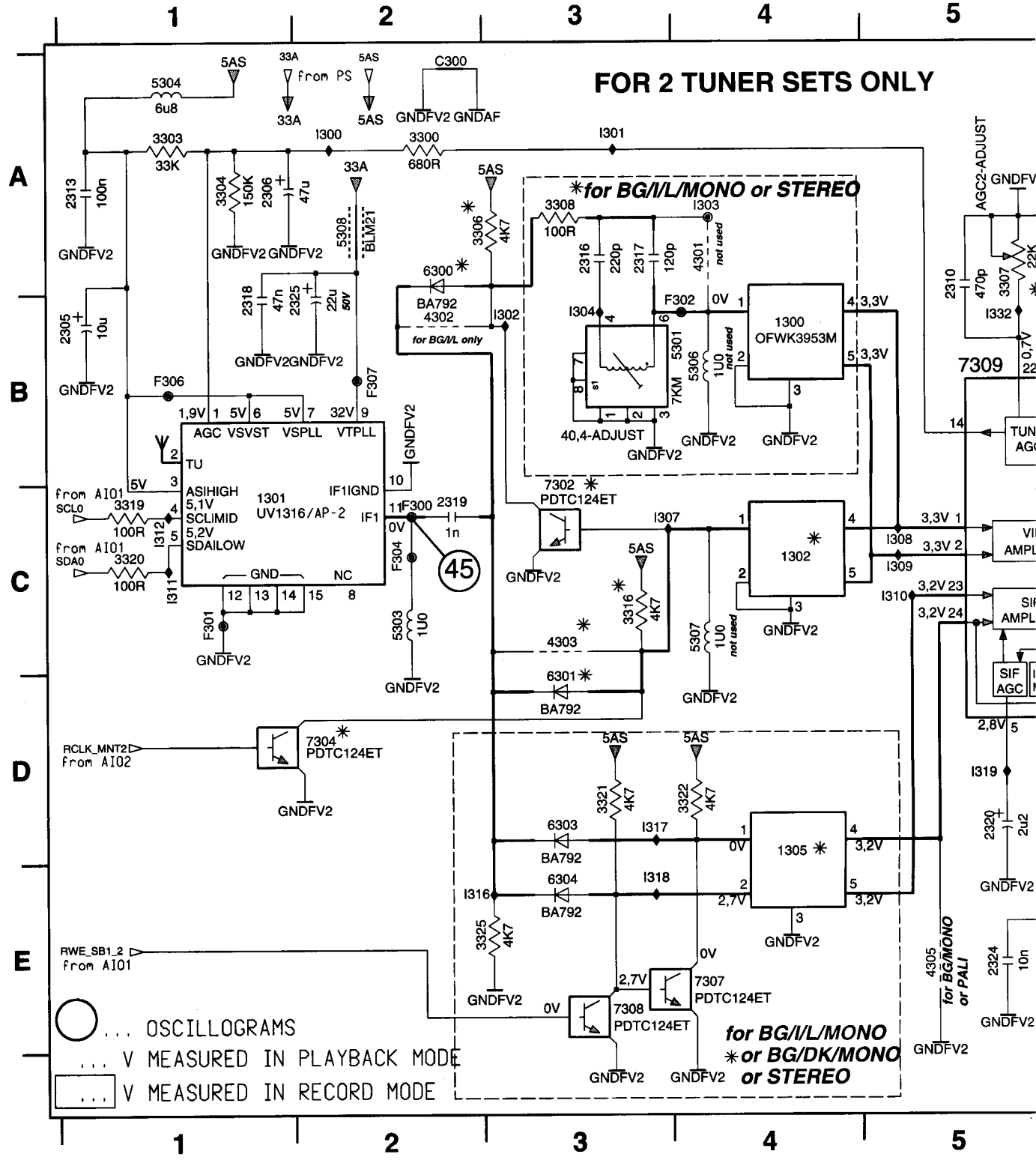

Interconnections														
Circuit	ACO	AF	AF2	AIO1	AIO2	AL	AMP	AP	COTV	CVB	DE	DOSCD	HA	HPAV	IO_1
page	3-29	3-22	3-30	3-16	3-17	3-23	3-13	3-21	3-14	3-19	3-18	3-32	3-26	3-27	3-11
Circuit	KB1D	KB2D	LS	MFSWD	PS (RUB)	PS (TVB)	PT	SF	SFD	TU1	TU2	TV	VS	VSEC	
page	3-33	3-34	3-8	3-34	3-15	3-7	3-28	3-12	3-31	3-9	3-20	3-10	3-24	3-25	

6301 D3	7302 C3	F300 C2	F307 B2	I308 C5	I317 D3	I327 D8	I339 A9
6303 D3	7304 D2	F301 C1	I300 A2	I309 C5	I318 E3	I328 D8	I340 B10
6304 E3	7305 D10	F302 B4	I301 A3	I310 C5	I319 D5	I329 D8	I341 C9
7300 A10	7307 E4	F303 B8	I302 B3	I311 C1	I322 D6	I332 B5	I342 C10
7301-A E10	7308 E3	F304 C2	I303 A4	I312 C1	I324 E7	I334 B6	I347 D6
7301-B A10	7309 B5	F305 B9	I304 B3	I313 D10	I325 D7	I336 A6	I348 E6
7301-C D7	C300 A2	F306 B1	I307 C3	I316 E2	I326 D8	I337 B6	

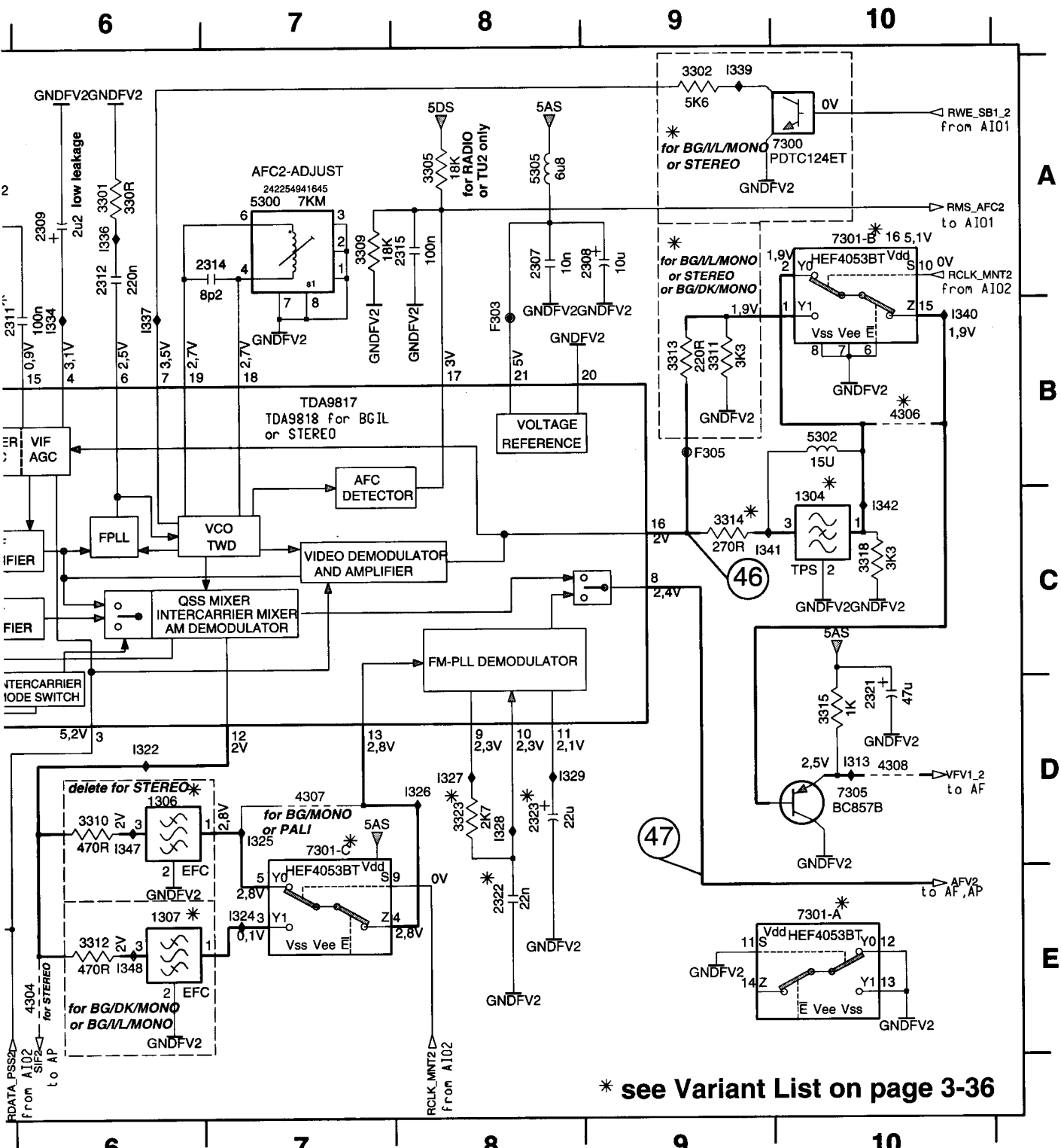

Sound Processing (AP) - Recorder Unit Board (RUBAD)

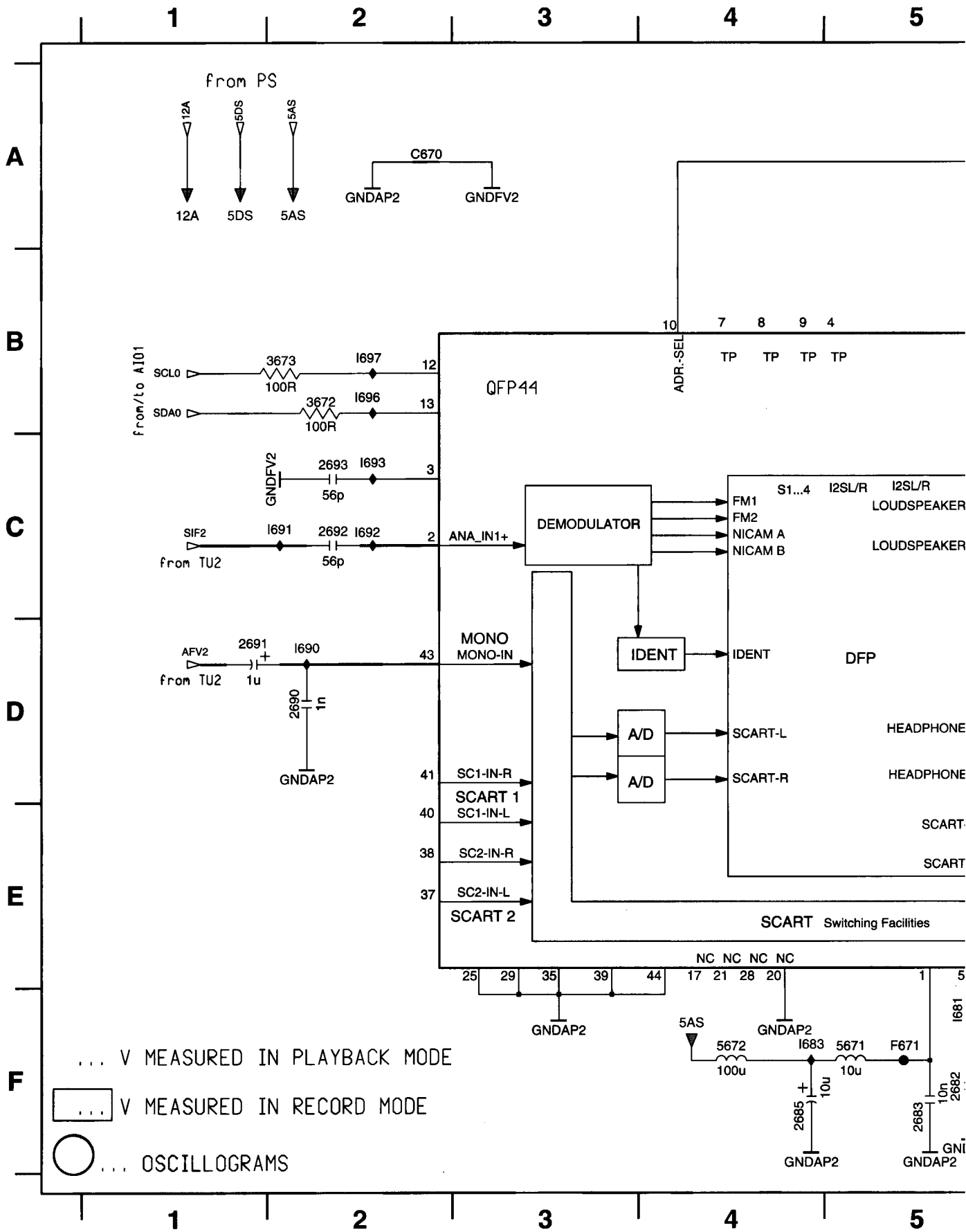

	Interconnections														
Circuit	ACO	AF	AF2	AIO1	AIO2	AL	AMP	AP	COTV	CVB	DE	DOSCD	HA	HPAV	IO_1
page	3-29	3-22	3-30	3-16	3-17	3-23	3-13	3-21	3-14	3-19	3-18	3-32	3-26	3-27	3-11
Circuit	KB1D	KB2D	LS	MFSWD	PS (RUB)	PS (TVB)	PT	SF	SFD	TU1	TU2	TV	VS	VSEC	
page	3-33	3-34	3-8	3-34	3-15	3-7	3-28	3-12	3-31	3-9	3-20	3-10	3-24	3-25	

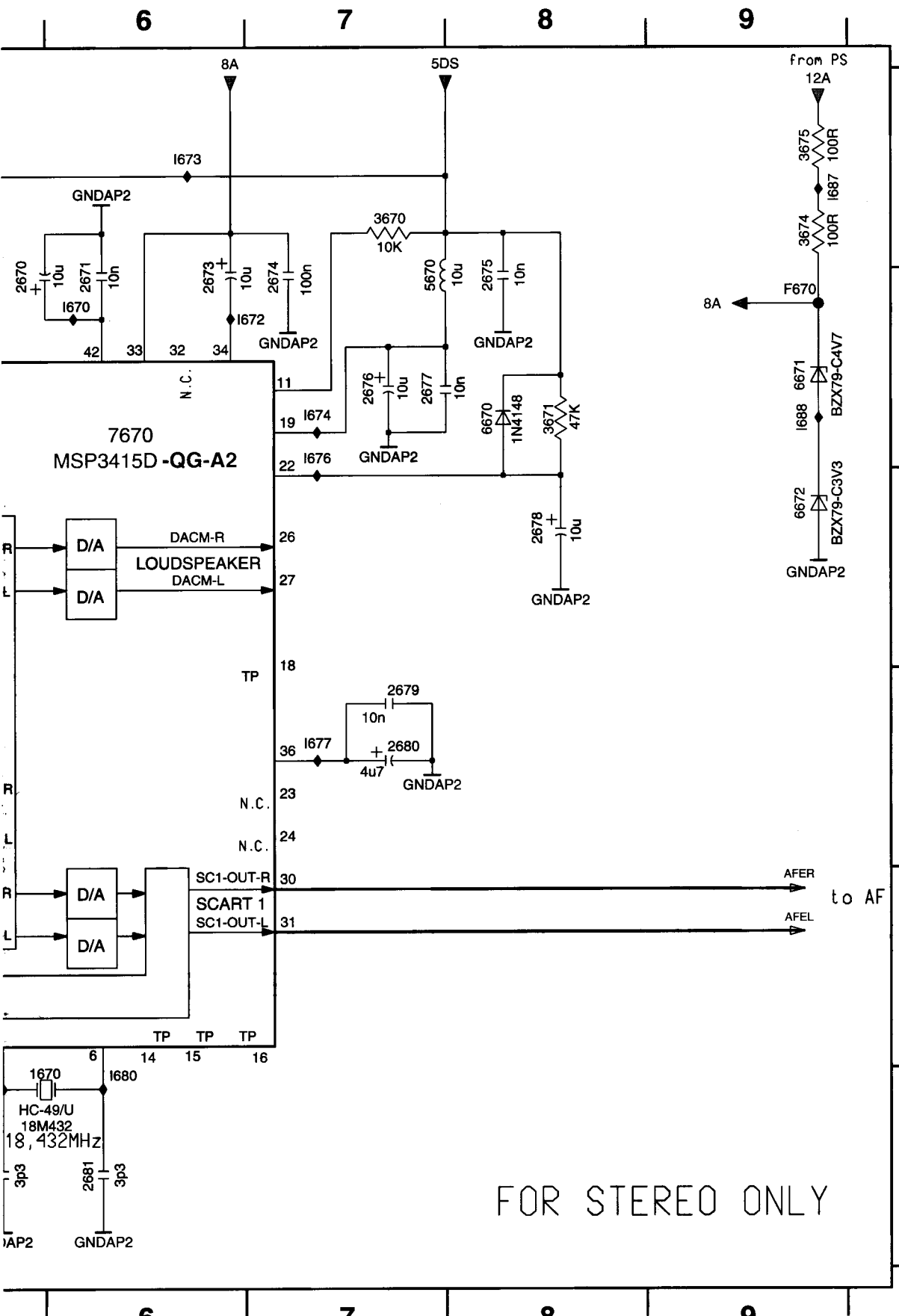

1670 F5
2670 B5
2671 B6
2673 B6
2674 B7
2675 B8
2676 B7
2677 B7
2678 C8
2679 D7
2680 D7
2681 F6
2682 F5
2683 F5
2685 F4
2690 D2
2691 D1
2692 C2
2693 C2
3670 A7
3671 B8
3672 B2
3673 B2
3674 A9
3675 A9
5670 B7
5671 F5
5672 F4
6670 B8
6671 B9
6672 C9
7670 B6
C670 A2
F670 B9
F671 F5
I670 B6
I672 B7
I673 A6
I674 B7
I676 B7
I677 D7
I680 F6
I681 F5
I683 F4
I687 A9
I688 B9
I690 D2
I691 C2
I692 C2
I693 C2
I696 B2
I697 B2

FM-Audio Processing (AF) - Recorder Unit Board (RUBAD)

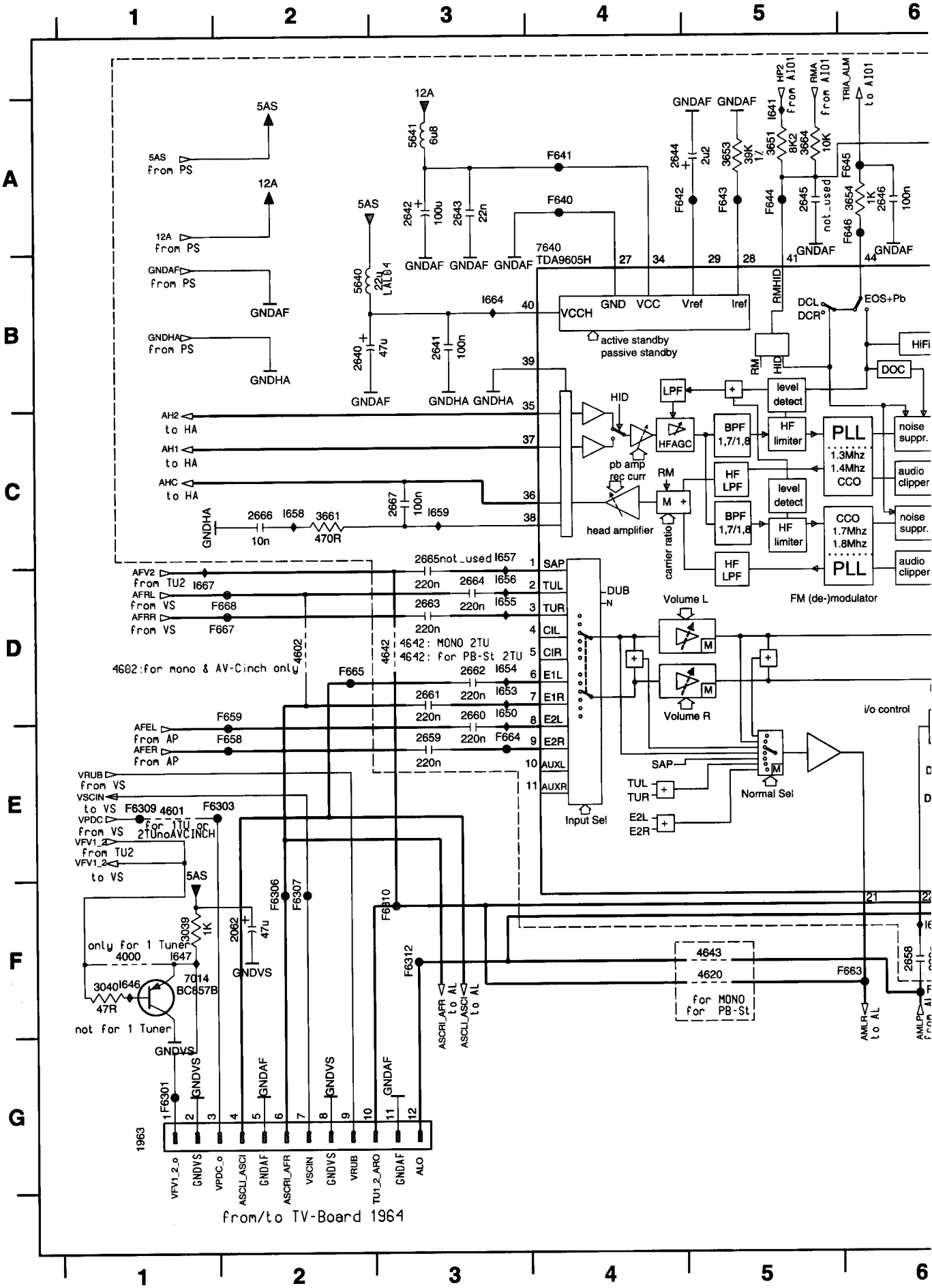

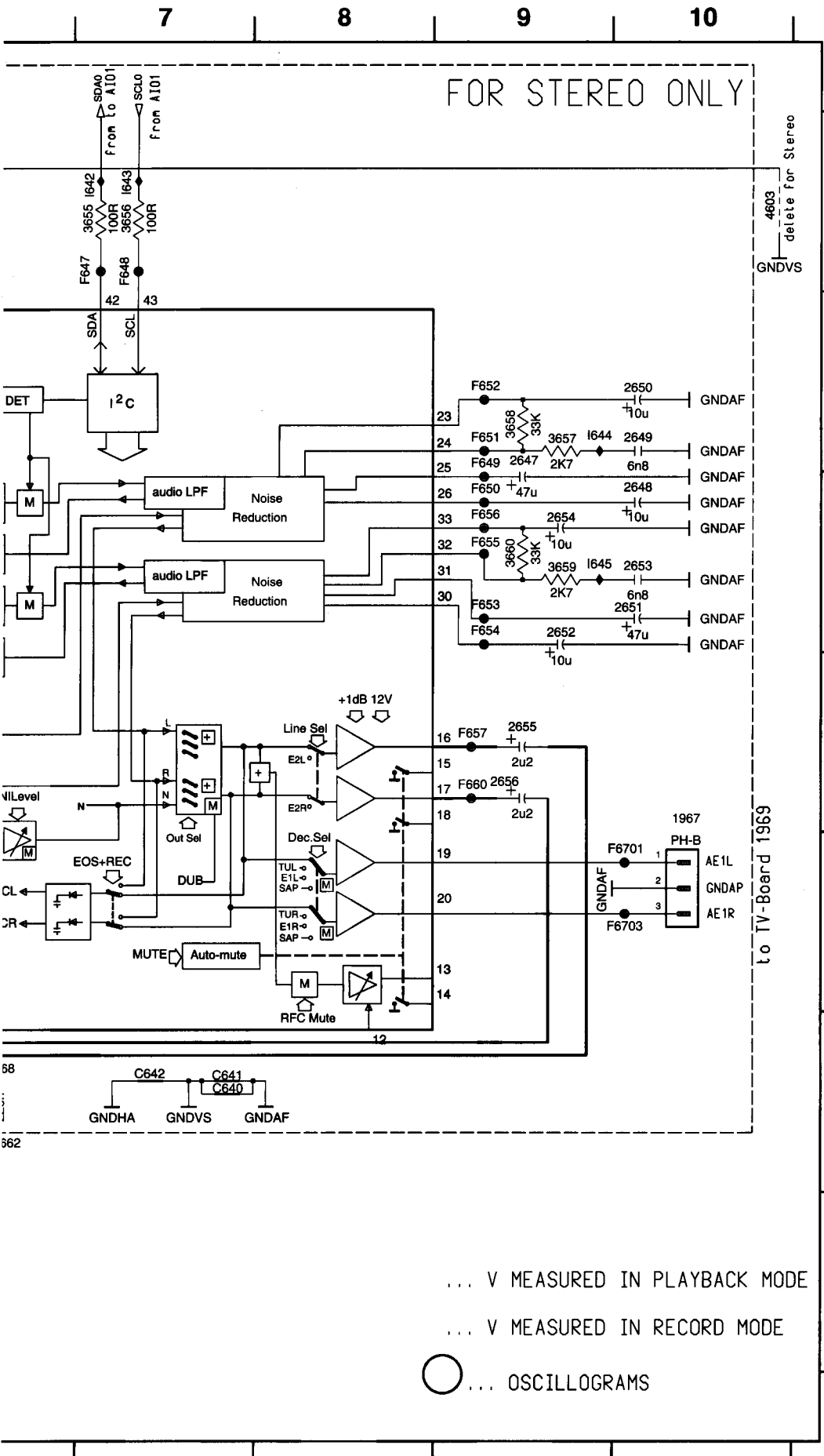

1963 G1
1967 D10
2062 F2
2640 B2
2641 B3
2642 A3
2643 A3
2644 A4
2645 A5
2646 A6
2647 B9
2648 C10
2649 B10
2650 B10
2651 C10
2652 C9
2653 C10
2654 C9
2655 D9
2656 D9
2658 F6
2659 E3
2660 D3
2661 D3
2662 D3
2663 D3
2664 D3
2665 C3
2666 C2
2667 C3
3039 F1
3040 F1
3651 A5
3653 A5
3654 A6
3655 A7
3656 A7
3657 B9
3658 B9
3659 C9
3660 C9
3661 C2
3664 A5
4000 F1
4601 E1
4602 D2
4603 A10
4620 F5
4642 D3
4643 F5
5640 B2
5641 A3
7014 F1
7640 A4
C640 F7
C641 F7
C642 F7
F6301 G1
F6303 E2
F6306 F2
F6307 F2
F6309 E1
F6310 F3
F6312 F3
F640 A4
F641 A4
F642 A4
F643 A5
F644 A5
F645 A6
F646 A6
F647 A7
F648 A7
F649 B9
F650 C9
F651 B9
F652 B9
F653 C9
F654 C9
F655 C9
F656 C9
F657 D9
F658 E2
F659 D2
F660 D9
F662 F6
F663 F6
F664 E3
F665 D2
F667 D2
F668 D2
F6701 E10
F6703 E10
I641 A5
I642 A7
I643 A7
I644 B9
I645 C9
I646 F1
I647 F1
I650 D3
I653 D3
I654 D3
I655 D3
I656 D3
I657 C3
I658 C2
I659 C3
I664 B3
I667 D1
I668 F6

Interconnections	
Circuit	page
ACO	3-29
AF	3-22
AF2	3-30
AIO1	3-16
AIO2	3-17
AL	3-23
AMP	3-13
AP	3-21
COTV	3-14
CVB	3-19
DE	3-18
DOSCD	3-32
HA	3-26
HPAV	3-27
IO_1	3-11
KB1D	3-33
KB2D	3-34
LS	3-8
MFSWD	3-34
PS (RUB)	3-15
PS (TVB)	3-7
PT	3-28
SF	3-12
SFD	3-31
TU1	3-9
TU2	3-20
TV	3-10
VS	3-24
VSEC	3-25

Linear Audio Processing (AL) - Recorder Unit Board (RUBAD

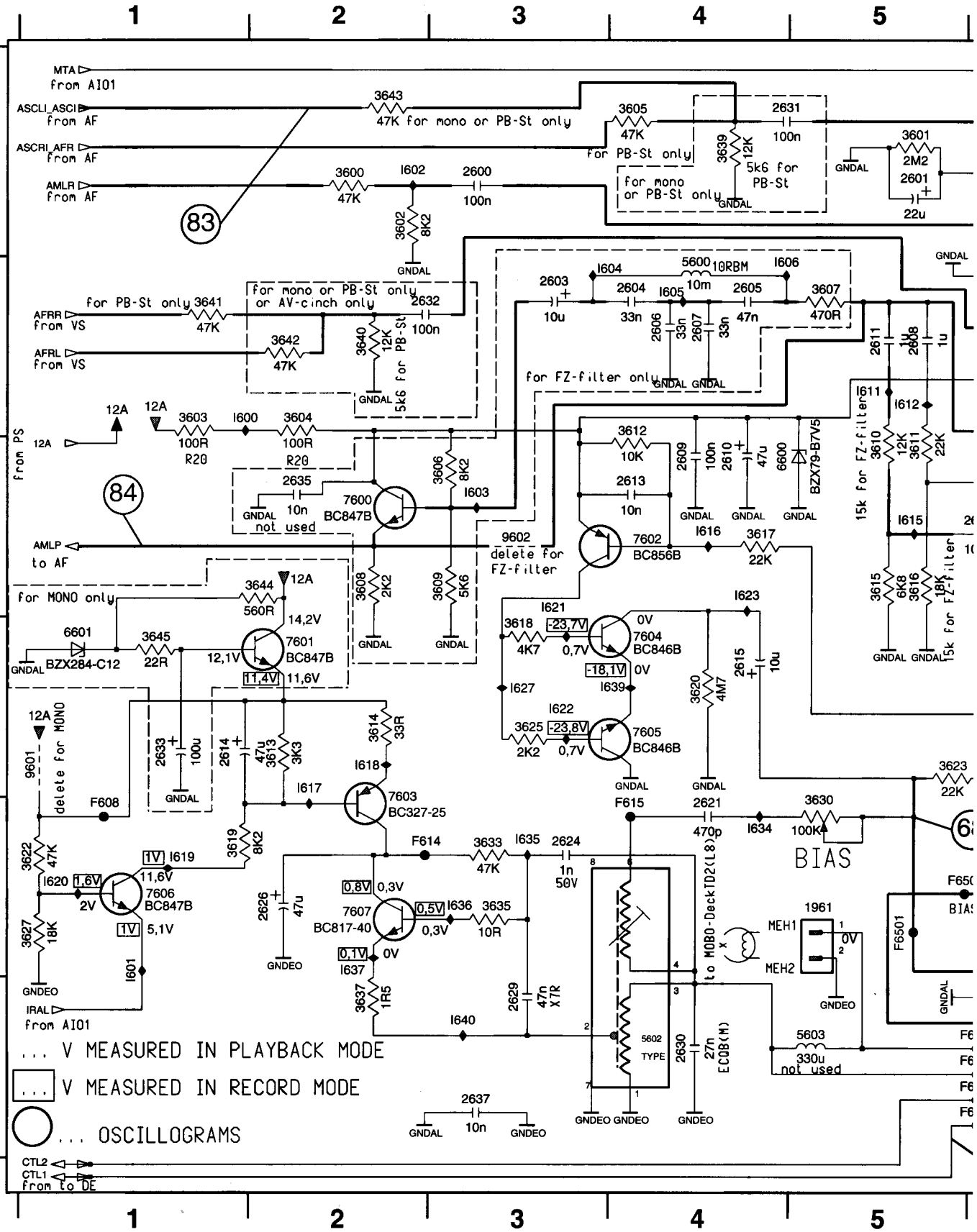

Interconnections															
Circuit	ACO	AF	AF2	AIO1	AIO2	AL	AMP	AP	COTV	CVB	DE	DOSCD	HA	HPAV	IO_1
page	3-29	3-22	3-30	3-16	3-17	3-23	3-13	3-21	3-14	3-19	3-18	3-32	3-26	3-27	3-11
Circuit	KB1D	KB2D	LS	MFSWD	PS (RUB)	PS (TVB)	PT	SF	SFD	TU1	TU2	TV	VS	VSEC	
page	3-33	3-34	3-8	3-34	3-15	3-7	3-28	3-12	3-31	3-9	3-20	3-10	3-24	3-25	

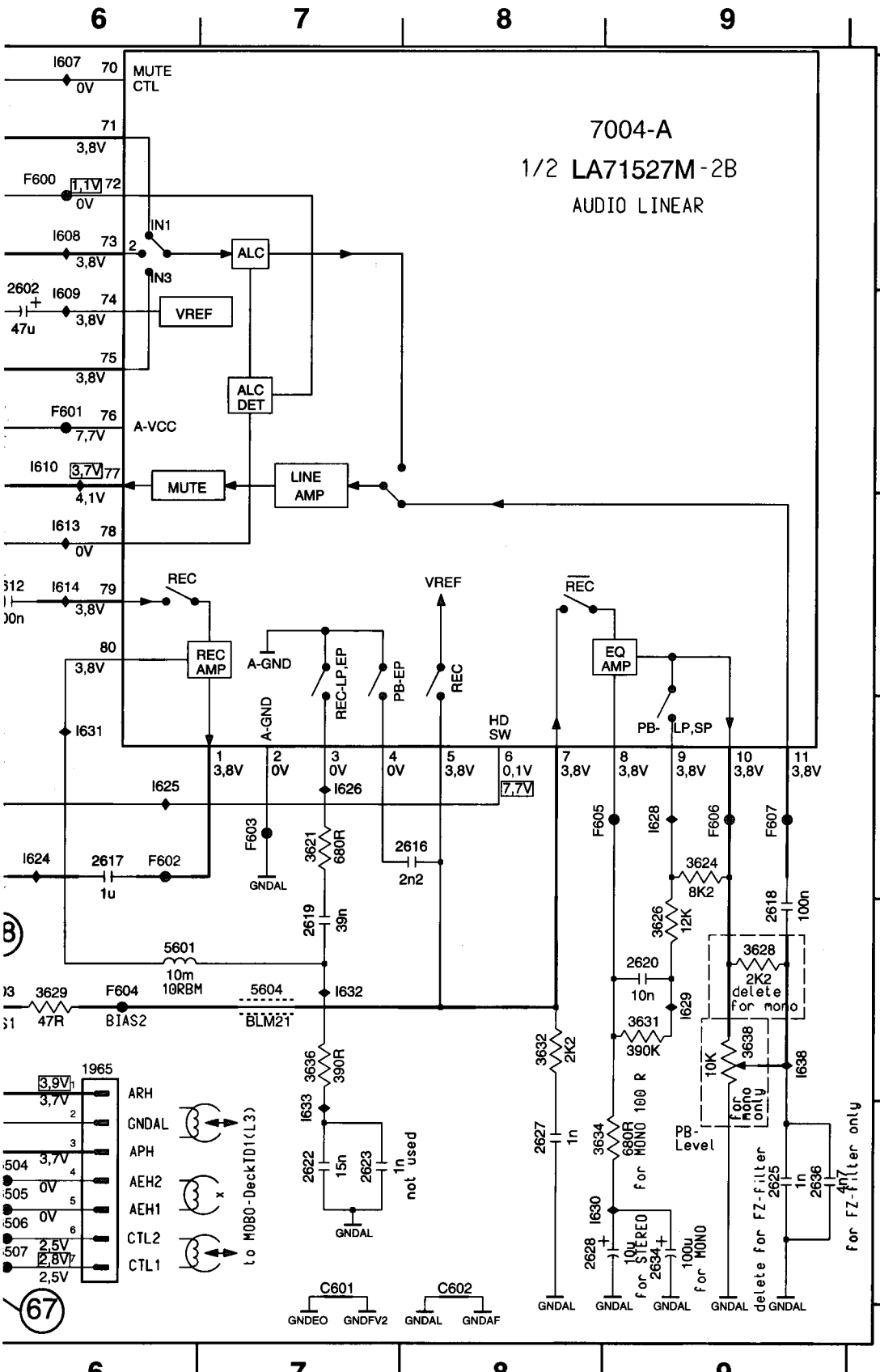

1961 E5	5602 F4	
1965 E6	5603 F5	
2600 A3	5604 E7	
2601 A5	6600 C4	
2602 B6	6601 D1	
2603 B3	7004-A A8	
2604 B4	7600 C2	
2605 B4	7601 D2	
2606 B4	7602 C4	
2607 B4	7603 E2	
2608 B5	7604 D4	
2609 C4	7605 D4	
2610 C4	7606 E1	
2611 B5	7607 E2	
2612 C6	9601 D1	
2613 C4	9602 C3	
2614 D1	C601 F7	
2615 D4	C602 F8	
2616 D8	F600 A6	
2617 D6	F601 B6	
2618 E9	F602 D6	
2619 E7	F603 D7	
2620 E9	F604 E6	
2621 E4	F605 D8	
2622 F7	F606 D9	
2623 F7	F607 D9	
2624 E3	F608 E1	
2625 F9	F614 E2	
2626 E2	F615 E4	
2627 F8	F6501 E5	
2628 F8	F6503 E5	
2629 F3	F6504 F6	
2630 F4	F6505 F6	
2631 A4	F6506 F6	
2632 B2	F6507 F6	
2633 D1	I600 B1	
2634 F9	I601 E1	
2635 C2	I602 A2	
2636 F9	I603 C3	
2637 F3	I604 B4	
3600 A2	I605 B4	
3601 A5	I606 B4	
3602 A2	I607 A6	
3603 B1	I608 A6	
3604 B2	I609 B6	
3605 A4	I610 B6	
3606 C3	I611 B5	
3607 B5	I612 B5	
3608 C2	I613 C6	
3609 C3	I614 C6	
3610 C5	I615 C5	
3611 C5	I616 C4	
3612 B4	I617 D2	
3613 D2	I618 D2	
3614 D2	I619 E1	
3615 C5	I620 E1	
3616 C5	I621 C3	
3617 C4	I622 D3	
3618 D3	I623 C4	
3619 E1	I624 D6	
3620 D4	I625 D6	
3621 D7	I626 D7	
3622 E1	I627 D3	
3623 D5	I628 D9	
3624 D9	I629 E9	
3625 D3	I630 F8	
3626 E9	I631 D6	
3627 E1	I632 E7	
3628 E9	I633 F7	
3629 E6	I634 E4	
3630 D5	I635 E3	
3631 E9	I636 E3	
3632 E8	I637 E2	
3633 E3	I638 E9	
3634 F9	I639 D4	
3635 E3	I640 F3	
3636 E7		
3637 F2		
3638 E9		
3639 A4		
3640 B2		
3641 B1		
3642 B2		
3643 A2		
3644 C2		
3645 D1		
5600 B4		
5601 E6		

Video Signal Processing (VS) - Recorder Unit Board (RUBA

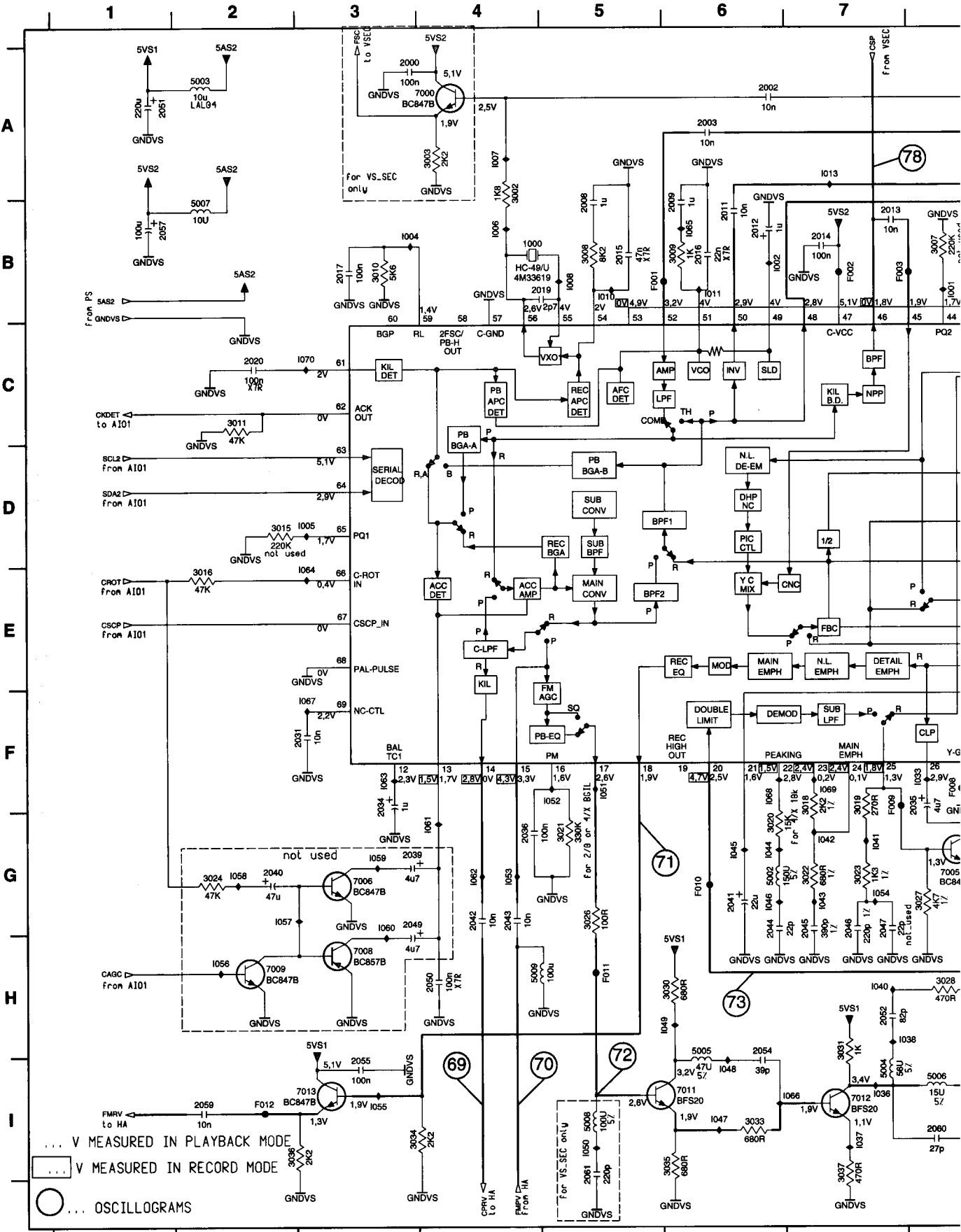

Interconnections															
Circuit	ACO	AF	AF2	AIO1	AIO2	AL	AMP	AP	COTV	CVB	DE	DOSCD	HA	HPAV	IO_1
page	3-29	3-22	3-30	3-16	3-17	3-23	3-13	3-21	3-14	3-19	3-18	3-32	3-26	3-27	3-11
Circuit	KB1D	KB2D	LS	MFSWD	PS (RUB)	PS (TVB)	PT	SF	SFD	TU1	TU2	TV	VS	VSEC	
page	3-33	3-34	3-8	3-34	3-15	3-7	3-28	3-12	3-31	3-9	3-20	3-10	3-24	3-25	

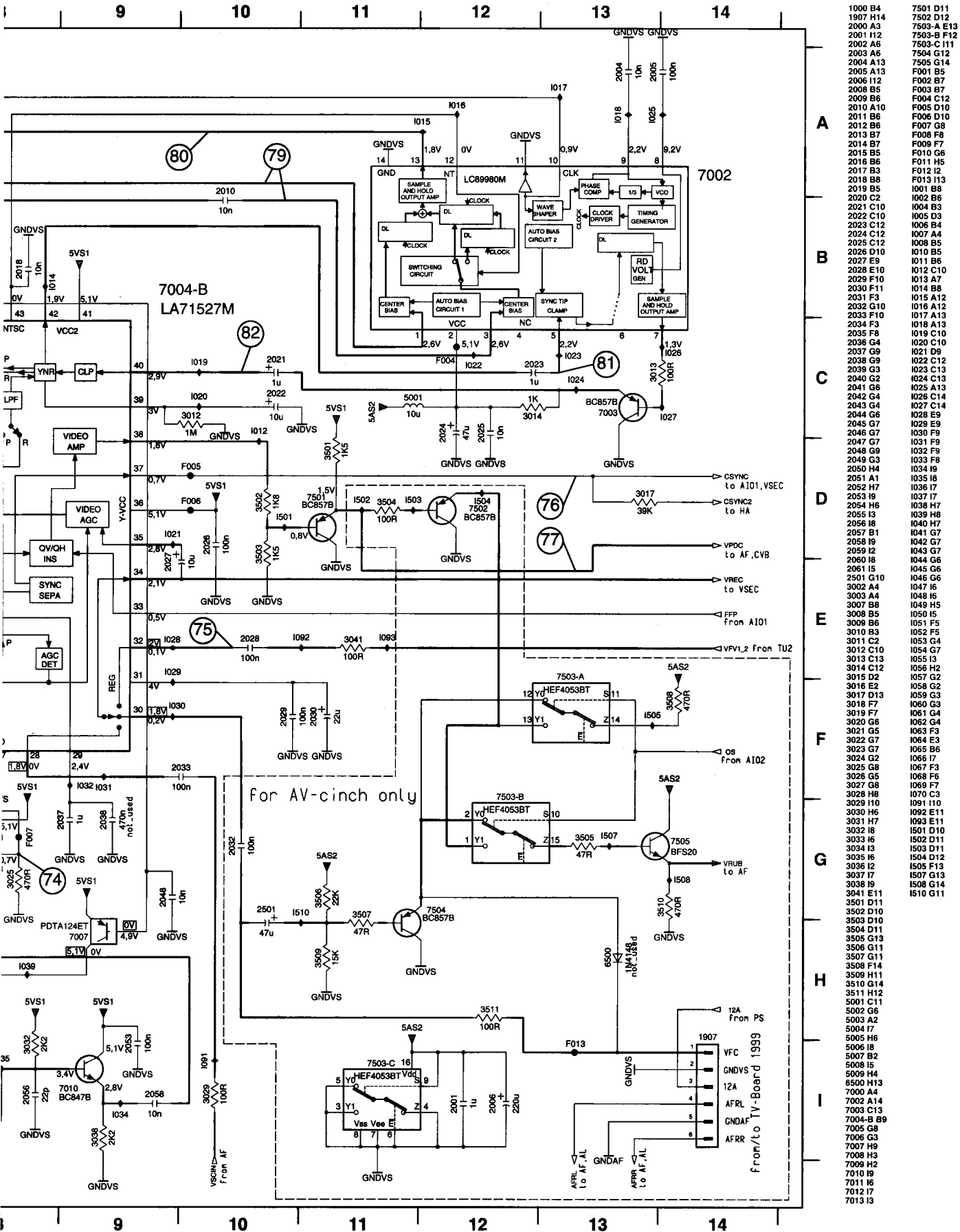

1000 B4
1907 H14
2000 A3
2001 I12
2002 A6
2003 A6
2004 A13
2005 A13
2006 I12
2008 B5
2009 B6
2010 A10
2011 B6
2012 B6
2013 B7
2014 B7
2015 B5
2016 B6
2017 B3
2018 B8
2019 B5
2020 C2
2021 C10
2022 C10
2023 C12
2024 C12
2025 C12
2026 D10
2027 E9
2028 E10
2029 F10
2030 F11
2031 F3
2032 G10
2033 F10
2034 F3
2035 F8
2036 G4
2037 G9
2038 G9
2039 G3
2040 G2
2041 G6
2042 G4
2043 G4
2044 G6
2045 G7
2046 G7
2047 G7
2048 G9
2049 G3
2050 H4
2051 A1
2052 H7
2053 I9
2054 H6
2055 I3
2056 I8
2057 B1
2058 I9
2059 I2
2060 I8
2061 I5
2501 G10
3002 A4
3003 A4
3007 B8
3008 B5
3009 B6
3010 B3
3011 C2
3012 C10
3013 C13
3014 C12
3015 D2
3016 E2
3017 D13
3018 F7
3019 F7
3020 G6
3021 G5
3022 G7
3023 G7
3024 G2
3025 G8
3026 G5
3027 G8
3028 H8
3029 I10
3030 H6
3031 H7
3032 I8
3033 I6
3034 I3
3035 I6
3036 I2
3037 I7
3038 I9
3041 E11
3501 D11
3502 D10
3503 D10
3504 D11
3505 G13
3506 G11
3507 G11
3508 F14
3509 H11
3510 G14
3511 H12
5001 C11
5002 G6
5003 A2
5004 I7
5005 H6
5006 I8
5007 B2
5008 I5
5009 H4
6500 H13
7000 A4
7002 A14
7003 C13
7004-B B9
7005 G8
7006 G3
7007 H9
7008 H3
7009 H2
7010 I9
7011 I6
7012 I7
7013 I3
7501 D11
7502 D12
7503-A E13
7503-B F12
7503-C I11
7504 G12
7505 G14
F001 B5
F002 B7
F003 B7
F004 C12
F005 D10
F006 D10
F007 G8
F008 F8
F009 F7
F010 G6
F011 H5
F012 I2
F013 I13
I001 B8
I002 B6
I004 B3
I005 D3
I006 B4
I007 A4
I008 B5
I010 B5
I011 B6
I012 C10
I013 A7
I014 B8
I015 A12
I016 A12
I017 A13
I018 A13
I019 C10
I020 C10
I021 D9
I022 C12
I023 C13
I024 C13
I025 A13
I026 C14
I027 C14
I028 E9
I029 E9
I030 F9
I031 F9
I032 F9
I033 F8
I034 I9
I035 I8
I036 I7
I037 I7
I038 H7
I039 H8
I040 H7
I041 G7
I042 G7
I043 G7
I044 G6
I045 G6
I046 G6
I047 I6
I048 I6
I049 H5
I050 I5
I051 F5
I052 F5
I053 G4
I054 G7
I055 I3
I056 H2
I057 G2
I058 G2
I059 G3
I060 G3
I061 G4
I062 G4
I063 F3
I064 E3
I065 B6
I066 I7
I067 F3
I068 F6
I069 F7
I070 C3
I091 I10
I092 E11
I093 E11
I501 D10
I502 D11
I503 D11
I504 D12
I505 F13
I507 G13
I508 G14
I510 G11

SECAM Processing (VSEC) - Recorder Unit Board (RUBAD)

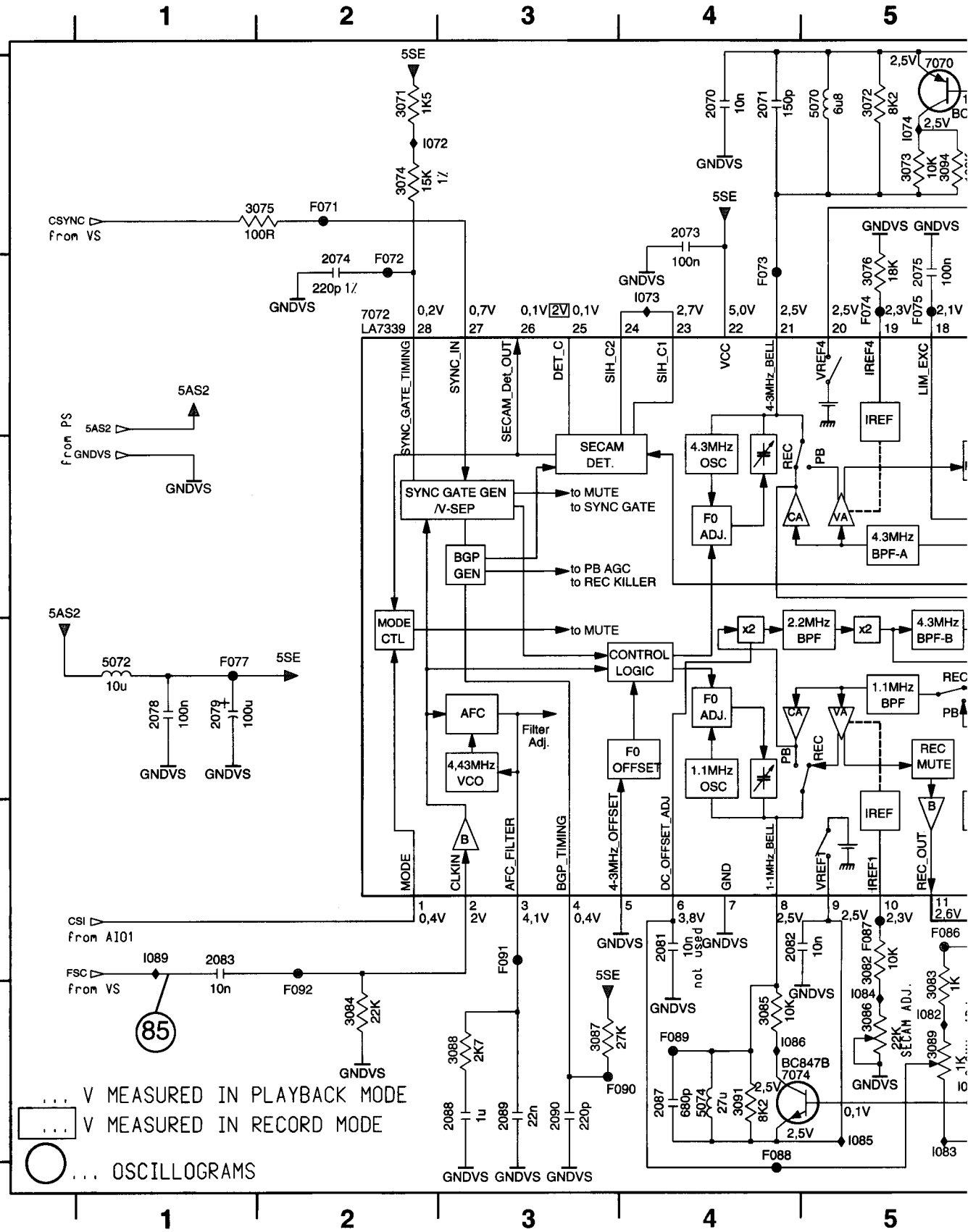

Interconnections															
Circuit	ACO	AF	AF2	AIO1	AIO2	AL	AMP	AP	COTV	CVB	DE	DOSCD	HA	HPAV	IO_1
page	3-29	3-22	3-30	3-16	3-17	3-23	3-13	3-21	3-14	3-19	3-18	3-32	3-26	3-27	3-11
Circuit	KB1D	KB2D	LS	MFSWD	PS (RUB)	PS (TVB)	PT	SF	SFD	TU1	TU2	TV	VS	VSEC	
page	3-33	3-34	3-8	3-34	3-15	3-7	3-28	3-12	3-31	3-9	3-20	3-10	3-24	3-25	

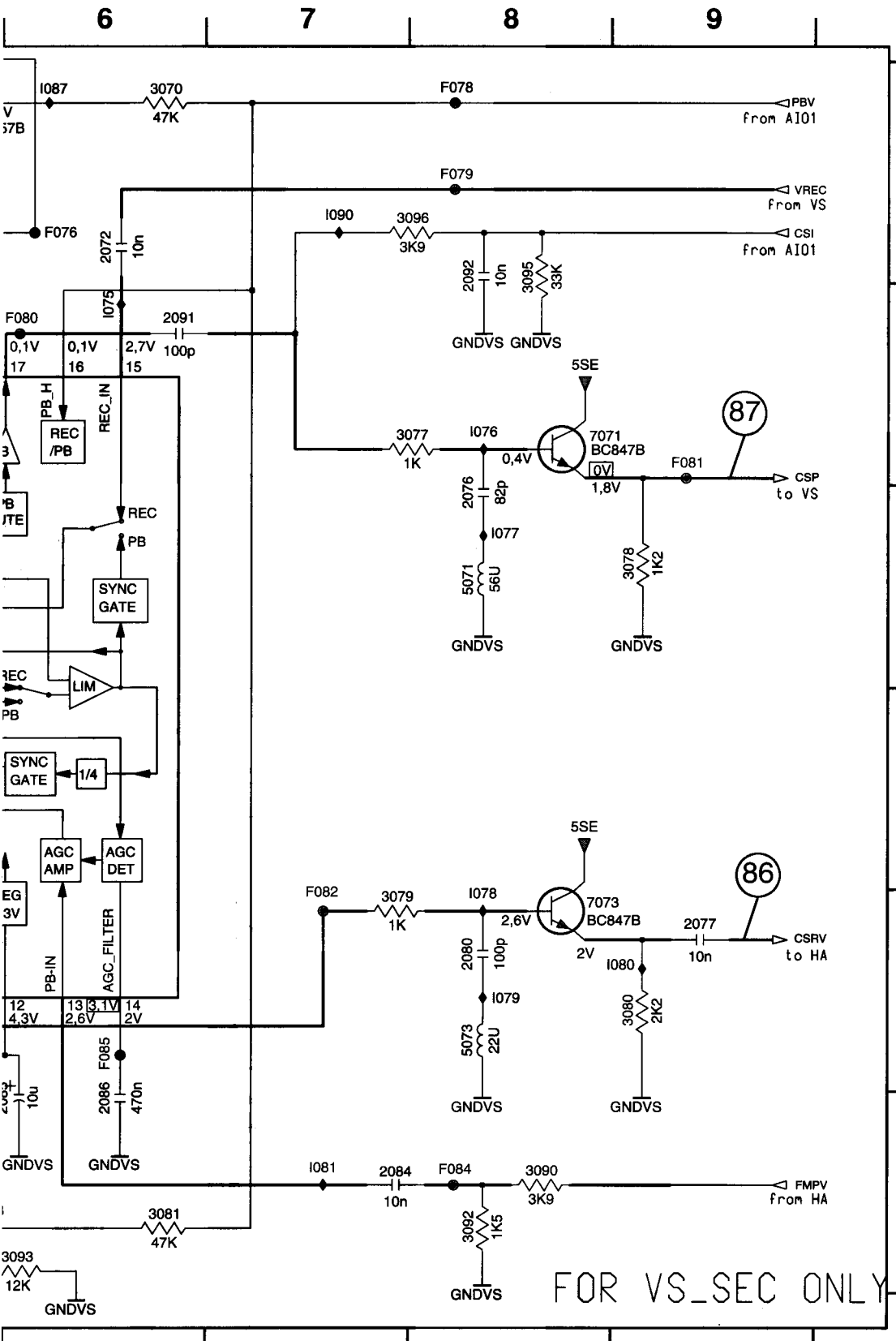

2070 A4
2071 A4
2072 A6
2073 A4
2074 B2
2075 B5
2076 C8
2077 E9
2078 D1
2079 D1
2080 E8
2081 E4
2082 E4
2083 E1
2084 F7
2085 F6
2086 F6
2087 F4
2088 F3
2089 F3
2090 F3
2091 B6
2092 A8
3070 A6
3071 A2
3072 A5
3073 A5
3074 A2
3075 A2
3076 B5
3077 B8
3078 C9
3079 E7
3080 E9
3081 F6
3082 E5
3083 F5
3084 F2
3085 F4
3086 F5
3087 F3
3088 F3
3089 F5
3090 F8
3091 F4
3092 F8
3093 F6
3094 A5
3095 A8
3096 A8
5070 A5
5071 C8
5072 D1
5073 E8
5074 F4
7070 A5
7071 B8
7072 B2
7073 E8
7074 F5
F071 A2
F072 B2
F073 B4
F074 B5
F075 B5
F076 A6
F077 D1
F078 A8
F079 A8
F080 B6
F081 B9
F082 D7
F084 F8
F085 E6
F086 E5
F087 E5
F088 F4
F089 F4
F090 F4
F091 E3
F092 F2
I072 A2
I073 B4
I074 A5
I075 B6
I076 B8
I077 C8
I078 E8
I079 E8
I080 E9
I081 F7
I082 F5
I083 F5
I084 F5
I085 F5
I086 F4
I087 A6
I088 F5
I089 E1
I090 A7

Head Amplifier (HA) - Recorder Unit Board (RUBAD)

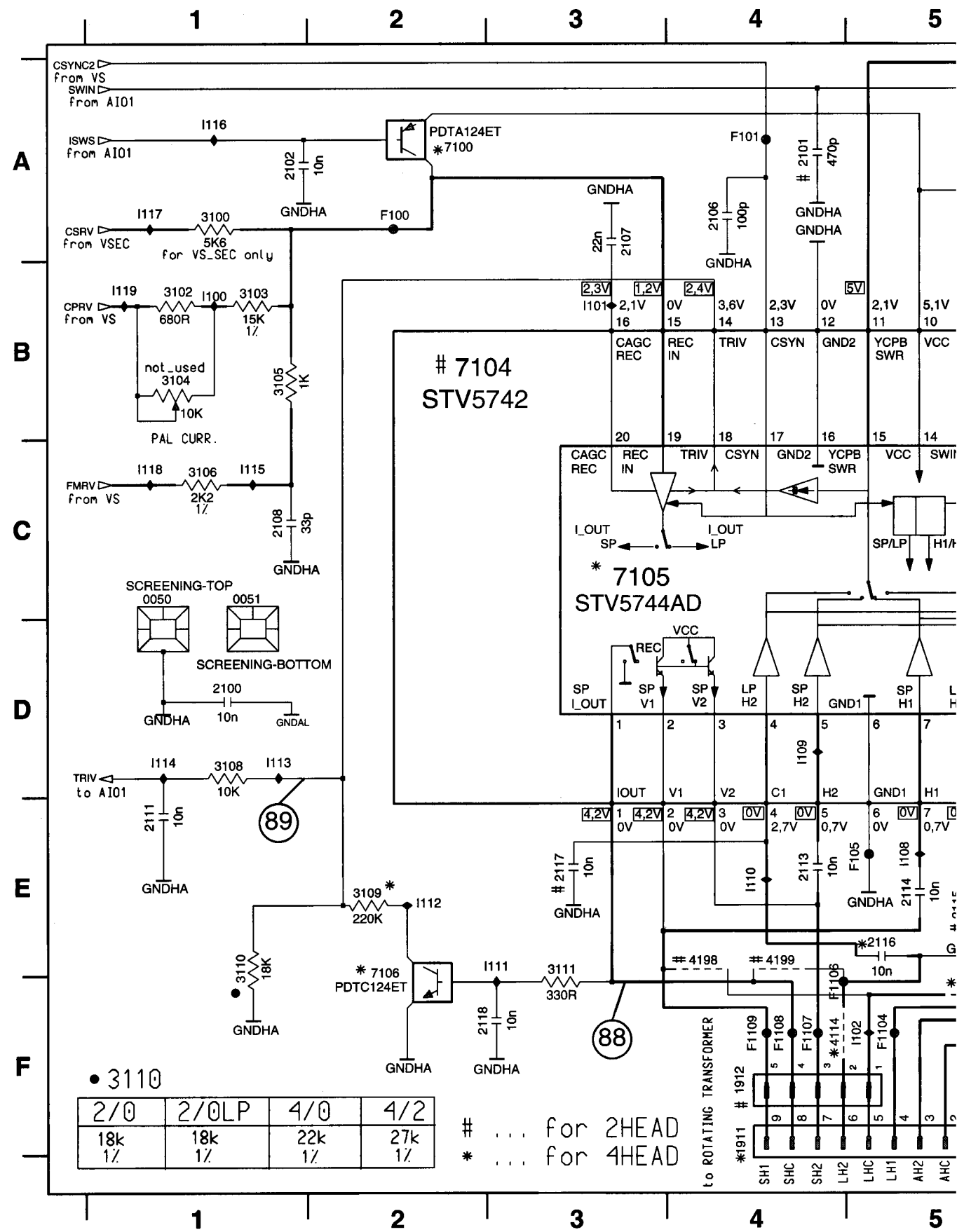

Interconnections														
Circuit	ACO	AF	AF2	AIO1	AIO2	AL	AMP	AP	COTV	CVB	DE	DOSCD	HA	HPAV	IO_1
page	3-29	3-22	3-30	3-16	3-17	3-23	3-13	3-21	3-14	3-19	3-18	3-32	3-26	3-27	3-11
Circuit	KB1D	KB2D	LS	MFSWD	PS (RUB)	PS (TVB)	PT	SF	SFD	TU1	TU2	TV	VS	VSEC	
page	3-33	3-34	3-8	3-34	3-15	3-7	3-28	3-12	3-31	3-9	3-20	3-10	3-24	3-25	

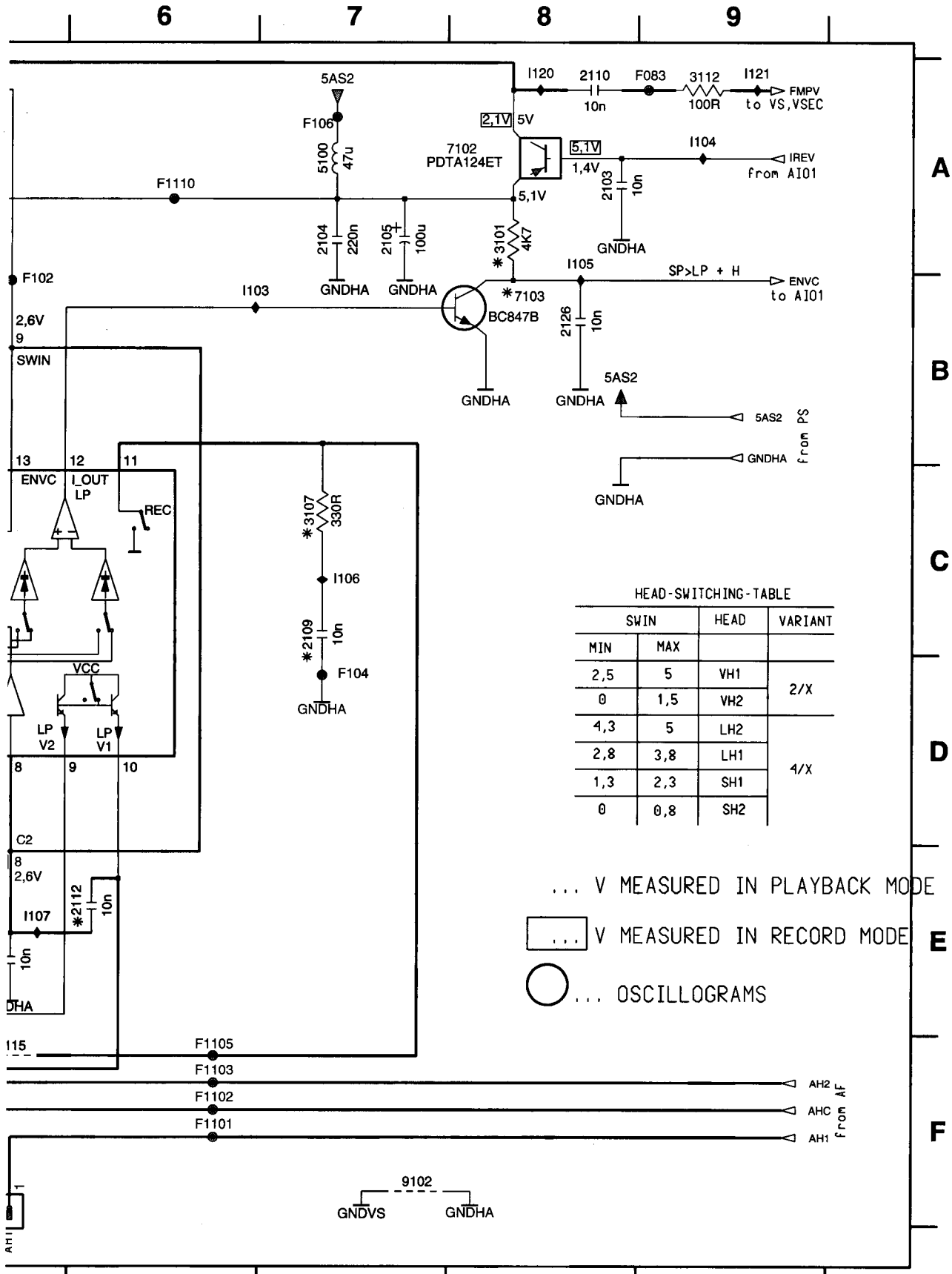

HEAD-SWITCHING-TABLE

SWIN		HEAD	VARIANT
MIN	MAX		
2,5	5	VH1	2/X
0	1,5	VH2	
4,3	5	LH2	4/X
2,8	3,8	LH1	
1,3	2,3	SH1	
0	0,8	SH2	

... V MEASURED IN PLAYBACK MODE

[...] V MEASURED IN RECORD MODE

... OSCILLOGRAMS

0050 C1
0051 C1
1911 F4
1912 F4
2100 D1
2101 A4
2102 A1
2103 A8
2104 A7
2105 A7
2106 A4
2107 A3
2108 C1
2109 C7
2110 A8
2111 E1
2112 E6
2113 E4
2114 E5
2115 E5
2116 E5
2117 E3
2118 F2
2126 B8
3100 A1
3101 A8
3102 B1
3103 B1
3104 B1
3105 B1
3106 C1
3107 C7
3108 D1
3109 E2
3110 E1
3111 E3
3112 A9
4114 F4
4115 F5
4198 E4
4199 E4
5100 A7
7100 A2
7102 A8
7103 B8
7104 B2
7105 C3
7106 F2
9102 F7
F083 A9
F100 A2
F101 A4
F102 B5
F104 D7
F105 E5
F106 A7
F1101 F6
F1102 F6
F1103 F6
F1104 F5
F1105 F6
F1106 F4
F1107 F4
F1108 F4
F1109 F4
F1110 A6
I100 B1
I101 B3
I102 F5
I103 B6
I104 A9
I105 A8
I106 C7
I107 E5
I108 E5
I109 D4
I110 E4
I111 E3
I112 E2
I113 D1
I114 D1
I115 C1
I116 A1
I117 A1
I118 C1
I119 B1
I120 A8
I121 A9

Headphone, Front-AV Board (HPAV)

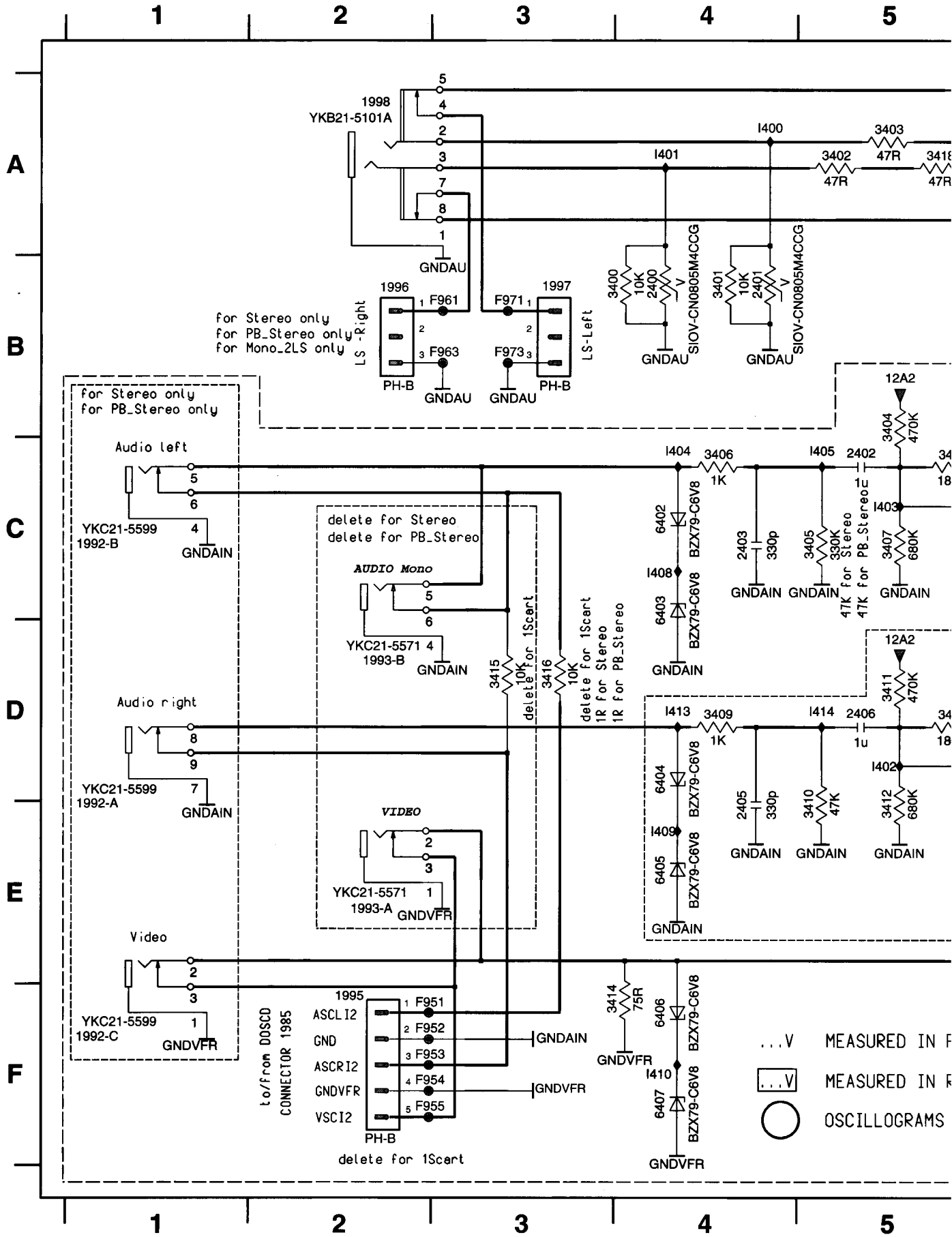

Interconnections															
Circuit	ACO	AF	AF2	AIO1	AIO2	AL	AMP	AP	COTV	CVB	DE	DOSCD	HA	HPAV	IO_1
page	3-29	3-22	3-30	3-16	3-17	3-23	3-13	3-21	3-14	3-19	3-18	3-32	3-26	3-27	3-11
Circuit	KB1D	KB2D	LS	MFSWD	PS (RUB)	PS (TVB)	PT	SF	SFD	TU1	TU2	TV	VS	VSEC	
page	3-33	3-34	3-8	3-34	3-15	3-7	3-28	3-12	3-31	3-9	3-20	3-10	3-24	3-25	

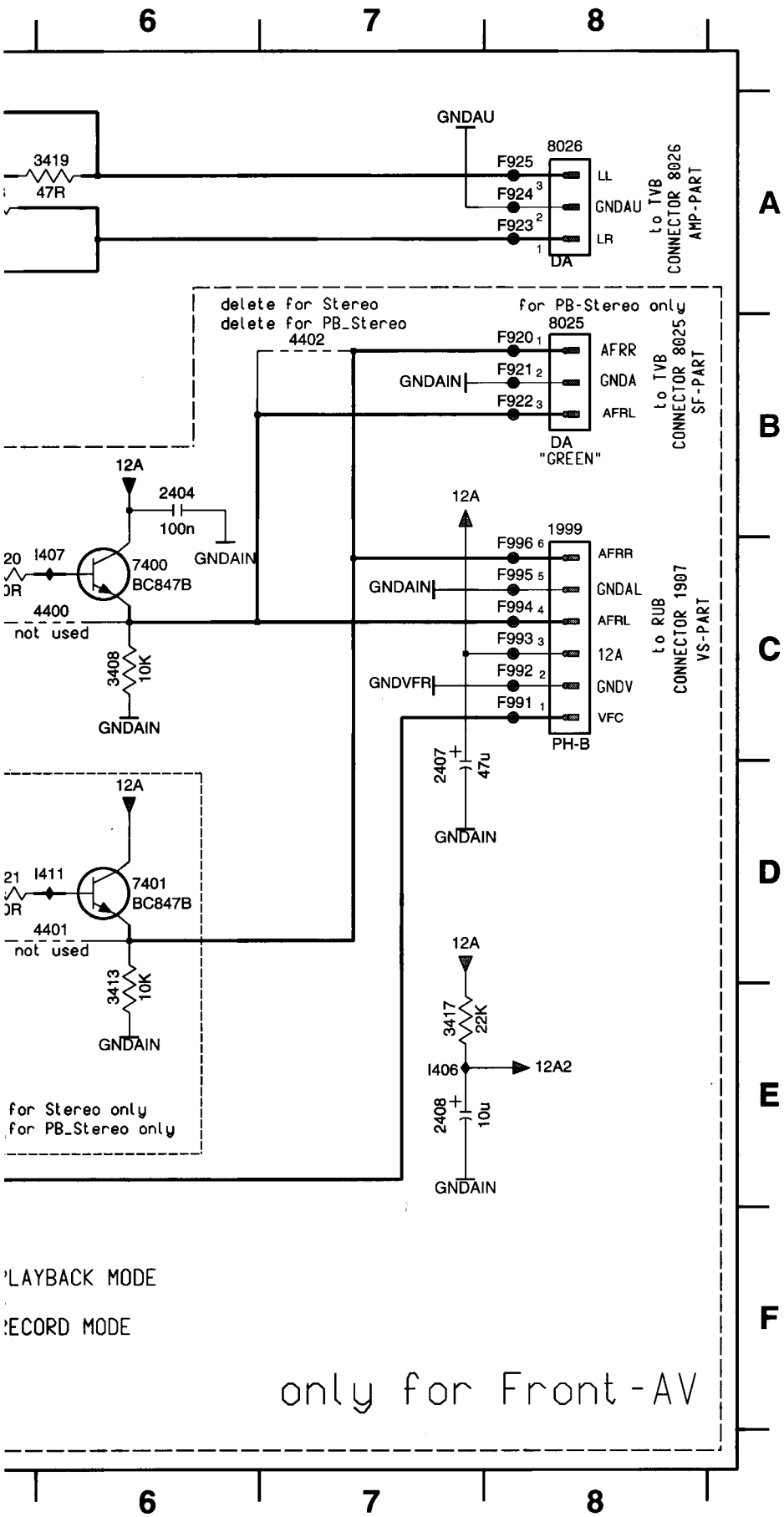

1992-A D1
1992-B C1
1992-C F1
1993-A E2
1993-B D2
1995 F2
1996 B2
1997 B3
1998 A2
1999 B8
2400 B4
2401 B4
2402 C5
2403 C4
2404 B6
2405 E4
2406 D5
2407 D7
2408 E7
3400 B4
3401 B4
3402 A5
3403 A5
3404 B5
3405 C5
3406 C4
3407 C5
3408 C6
3409 D4
3410 E5
3411 D5
3412 E5
3413 E6
3414 F4
3415 D3
3416 D3
3417 E7
3418 A5
3419 A6
3420 C5
3421 D5
4400 C6
4401 D6
4402 B7
6402 C4
6403 C4
6404 D4
6405 E4
6406 F4
6407 F4
7400 C6
7401 D6
8025 B8
8026 A8
F920 B8
F921 B8
F922 B8
F923 A8
F924 A8
F925 A8
F951 F2
F952 F2
F953 F2
F954 F2
F955 F2
F961 B3
F963 B3
F971 B3
F973 B3
F991 C8
F992 C8
F993 C8
F994 C8
F995 C8
F996 C8
I400 A4
I401 A4
I402 D5
I403 C5
I404 C4
I405 C5
I406 E7
I407 C6
I408 C4
I409 E4
I410 F4
I411 D6
I413 D4
I414 D5

CRT-Board (PT)

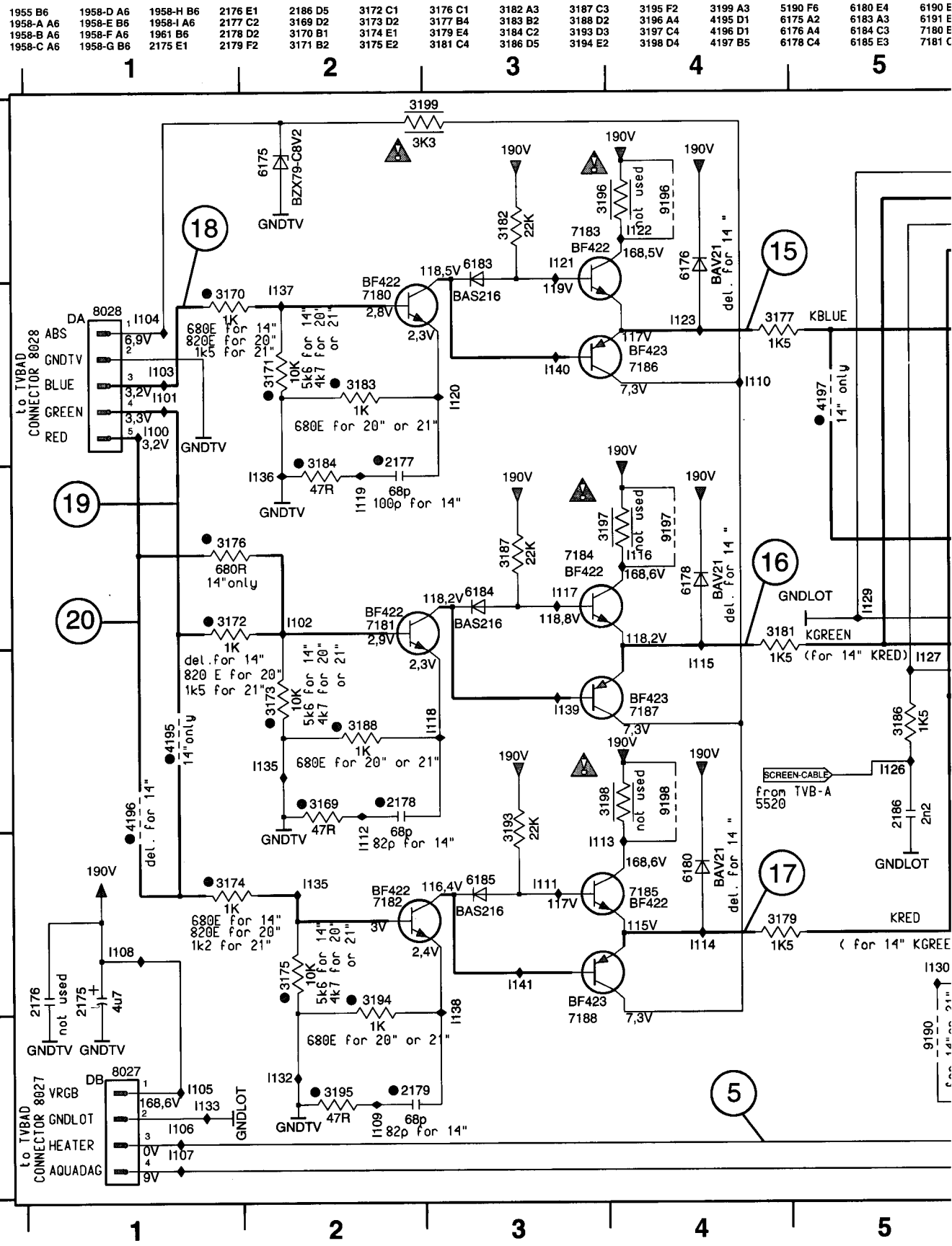

Interconnections															
Circuit	ACO	AF	AF2	AIO1	AIO2	AL	AMP	AP	COTV	CVB	DE	DOSCD	HA	HPAV	IO_1
page	3-29	3-22	3-30	3-16	3-17	3-23	3-13	3-21	3-14	3-19	3-18	3-32	3-26	3-27	3-11
Circuit	KB1D	KB2D	LS	MFSWD	PS (RUB)	PS (TVB)	PT	SF	SFD	TU1	TU2	TV	VS	VSEC	
page	3-33	3-34	3-8	3-34	3-15	3-7	3-28	3-12	3-31	3-9	3-20	3-10	3-24	3-25	

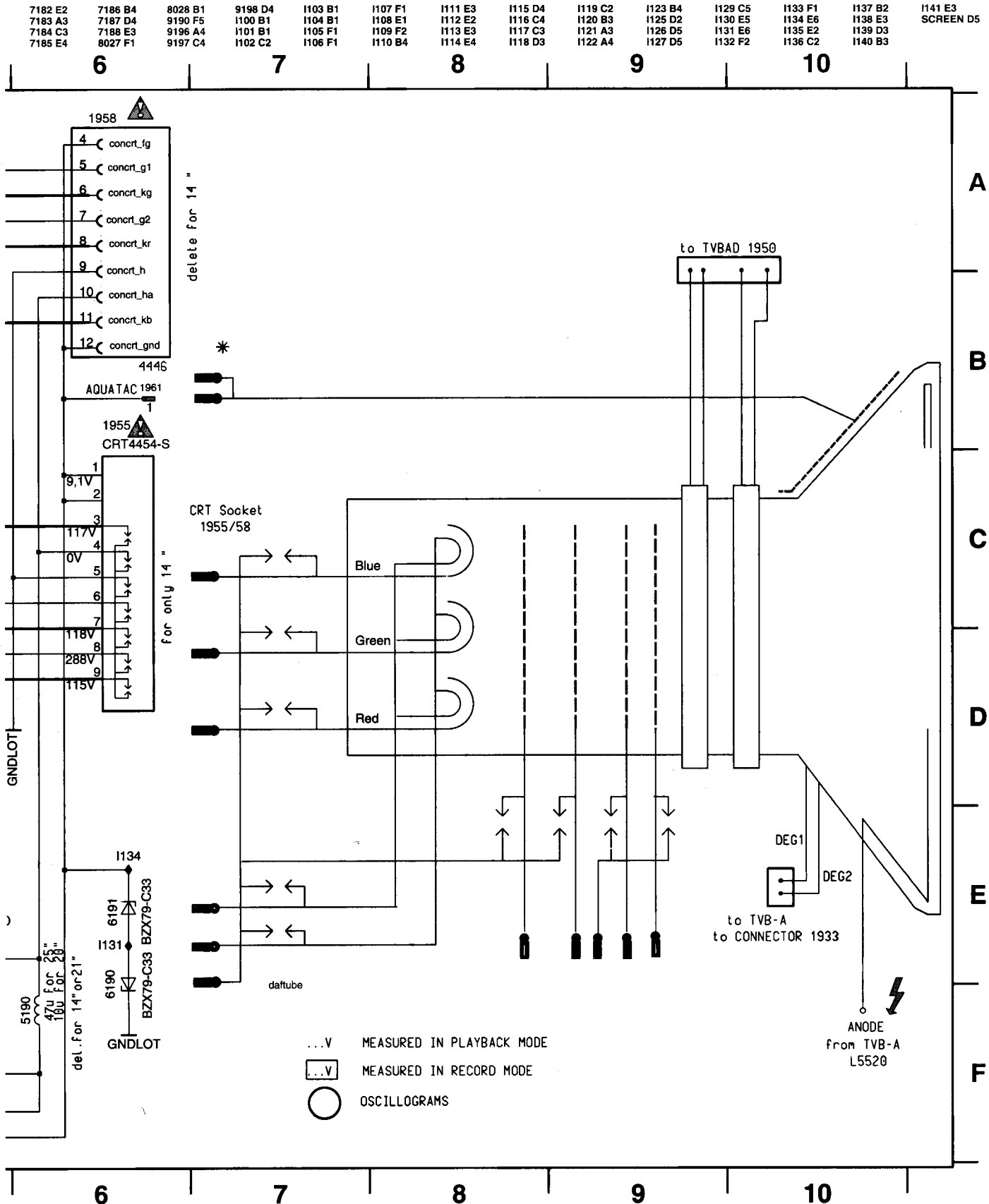
7182 E2
7183 A3
7184 C3
7185 E4
7186 B4
7187 D4
7188 E3
8027 F1
8028 B1
9190 F5
9196 A4
9197 C4
9198 D4
I100 B1
I101 B1
I102 C2
I103 B1
I104 B1
I105 F1
I106 F1
I107 F1
I108 E1
I109 F2
I110 B4
I111 E3
I112 E2
I113 E3
I114 E4
I115 D4
I116 C4
I117 C3
I118 D3
I119 C2
I120 B3
I121 A3
I122 A4
I123 B4
I125 D2
I126 D5
I127 D5
I129 C5
I130 E5
I131 E6
I132 F2
I133 F1
I134 E6
I135 E2
I136 C2
I137 B2
I138 E3
I139 D3
I140 B3
I141 E3
SCREEN D5
6
7
8
9
10
A
B
C
D
E
F
1958
4 concrt_fg
5 concrt_g1
6 concrt_kg
7 concrt_g2
8 concrt_kr
9 concrt_h
10 concrt_ha
11 concrt_kb
12 concrt_gnd
4446
delete for 14 "
AQUATAC 1961
1
1955
CRT4454-S
1
9,1V
2
3
117V
4
0V
5
6
7
118V
8
288V
9
115V
for only 14 "
GNDLOT
CRT Socket
1955/58
Blue
Green
Red
daftube
to TVBAD 1950
DEG1
DEG2
to TVB-A
to CONNECTOR 1933
ANODE
from TVB-A
L5520
I134
6191
I131
6190
BZX79-C33
BZX79-C33
GNDLOT
5190
47u for 25"
10u for 29"
del.for 14"or21"
...V MEASURED IN PLAYBACK MODE
...V MEASURED IN RECORD MODE
OSCILLOGRAMS

Pre Amplifier (ACO) - Audio Board (APDOD)

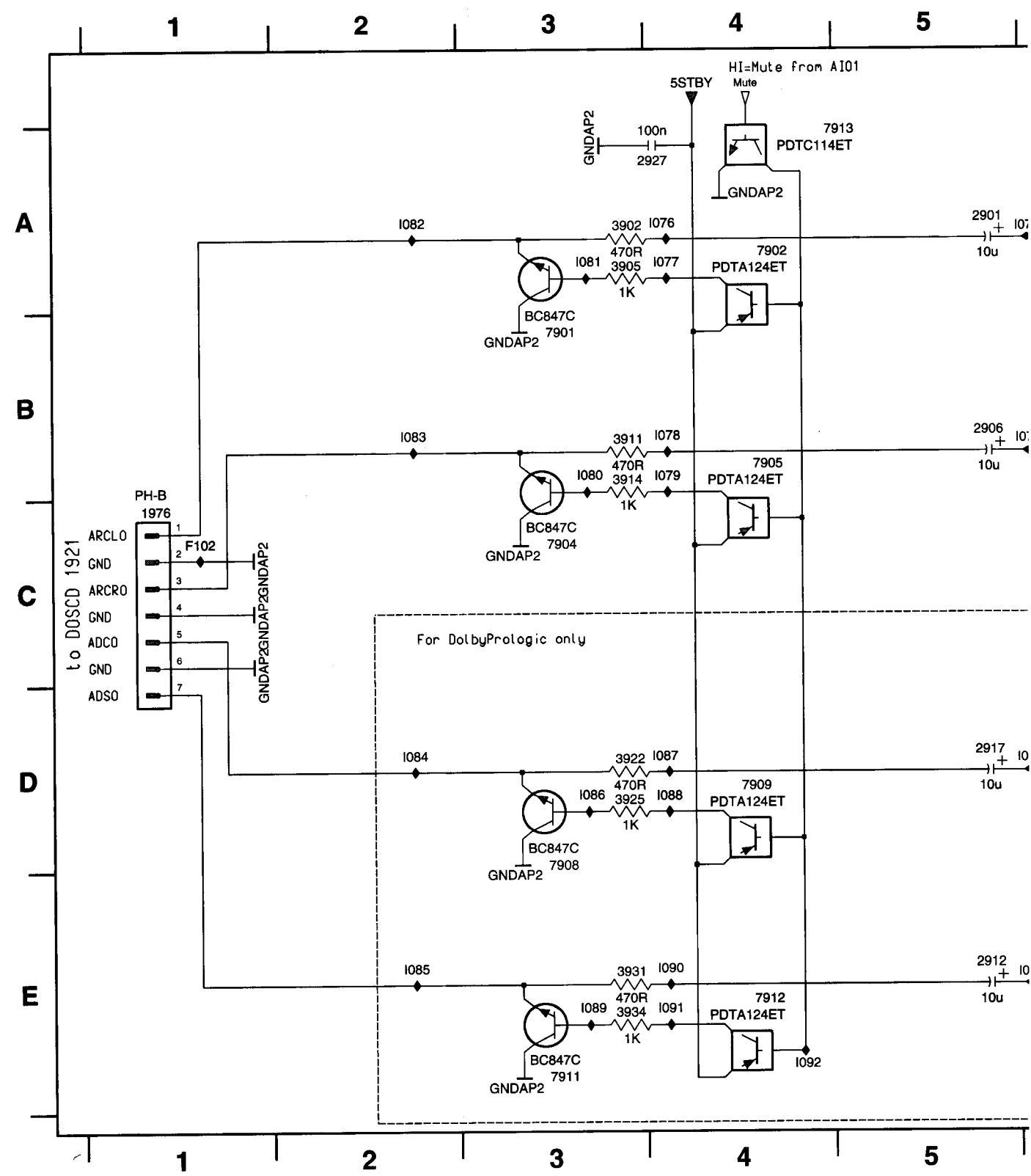

	Interconnections														
Circuit	ACO	AF	AF2	AIO1	AIO2	AL	AMP	AP	COTV	CVB	DE	DOSCD	HA	HPAV	IO_1
page	3-29	3-22	3-30	3-16	3-17	3-23	3-13	3-21	3-14	3-19	3-18	3-32	3-26	3-27	3-11
Circuit	KB1D	KB2D	LS	MFSWD	PS (RUB)	PS (TVB)	PT	SF	SFD	TU1	TU2	TV	VS	VSEC	
page	3-33	3-34	3-8	3-34	3-15	3-7	3-28	3-12	3-31	3-9	3-20	3-10	3-24	3-25	

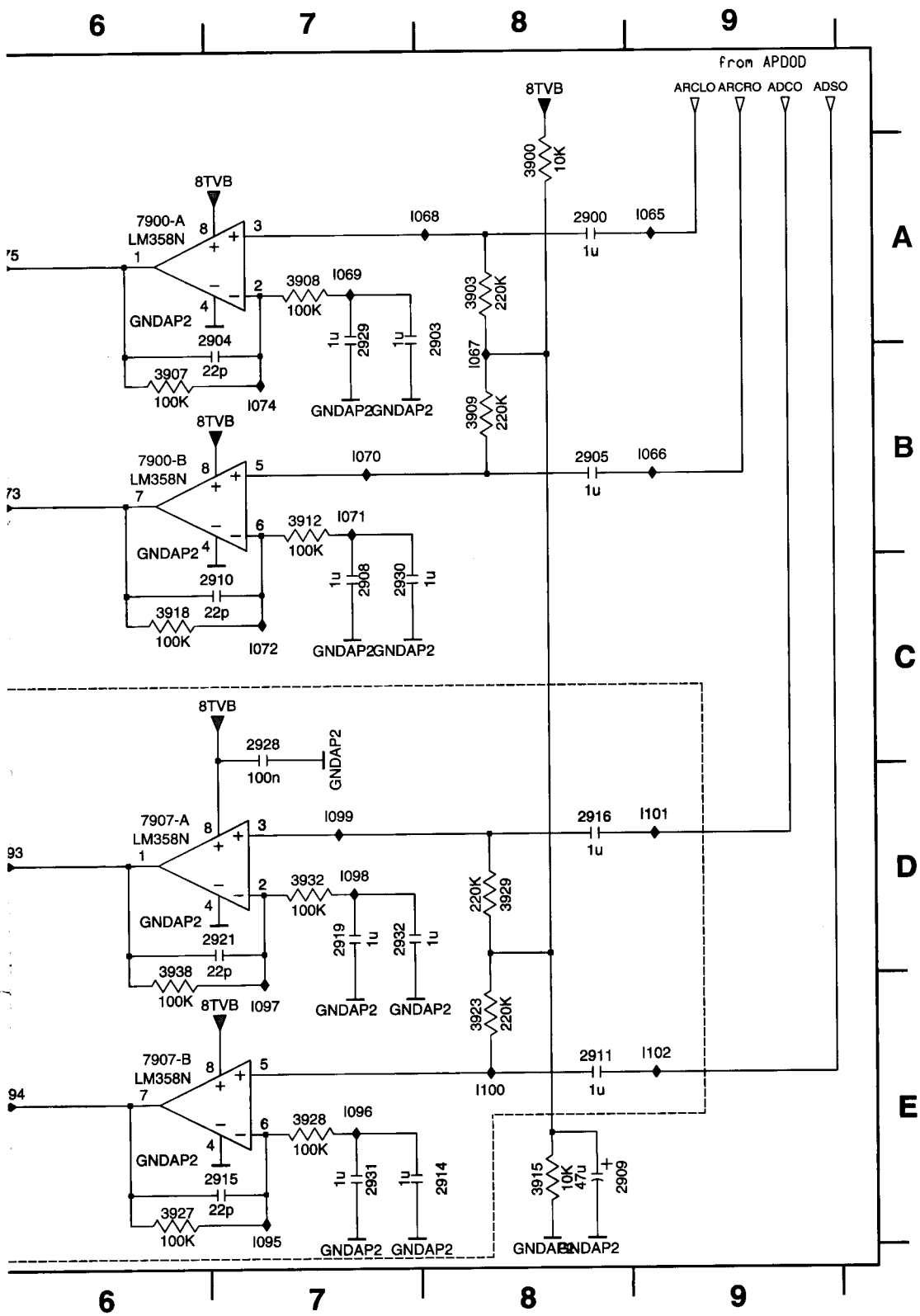

1976 C1
2900 A8
2901 A5
2903 A7
2904 B7
2905 B8
2906 B5
2908 C7
2909 E8
2910 C7
2911 E8
2912 E5
2914 E7
2915 E7
2916 D8
2917 D5
2919 D7
2921 D7
2927 A4
2928 C7
2929 A7
2930 C7
2931 E7
2932 D7
3900 A8
3902 A3
3903 A8
3905 A3
3907 B6
3908 A7
3909 B8
3911 B3
3912 B7
3914 B3
3915 E8
3918 C6
3922 D3
3923 E8
3925 D3
3927 E6
3928 E7
3929 D8
3931 E3
3932 D7
3934 E3
3938 E6
7900-A A6
7900-B B6
7901 A3
7902 A4
7904 B3
7905 C4
7907-A D6
7907-B E6
7908 D3
7909 D4
7911 E3
7912 E4
7913 A4
F102 C1
I065 A9
I066 B9
I067 B8
I068 A8
I069 A7
I070 B7
I071 B7
I072 C7
I073 B6
I074 B7
I075 A6
I076 A4
I077 A4
I078 B4
I079 B4
I080 B3
I081 A3
I082 A2
I083 B2
I084 D2
I085 E2
I086 D3
I087 D4
I088 D4
I089 E3
I090 E4
I091 E4
I092 E4
I093 D6
I094 E6
I095 E7
I096 E7
I097 E7
I098 D7
I099 D7
I100 E8
I101 D9
I102 E9

Audio Processing (AF2) - Audio Board (APDOD)

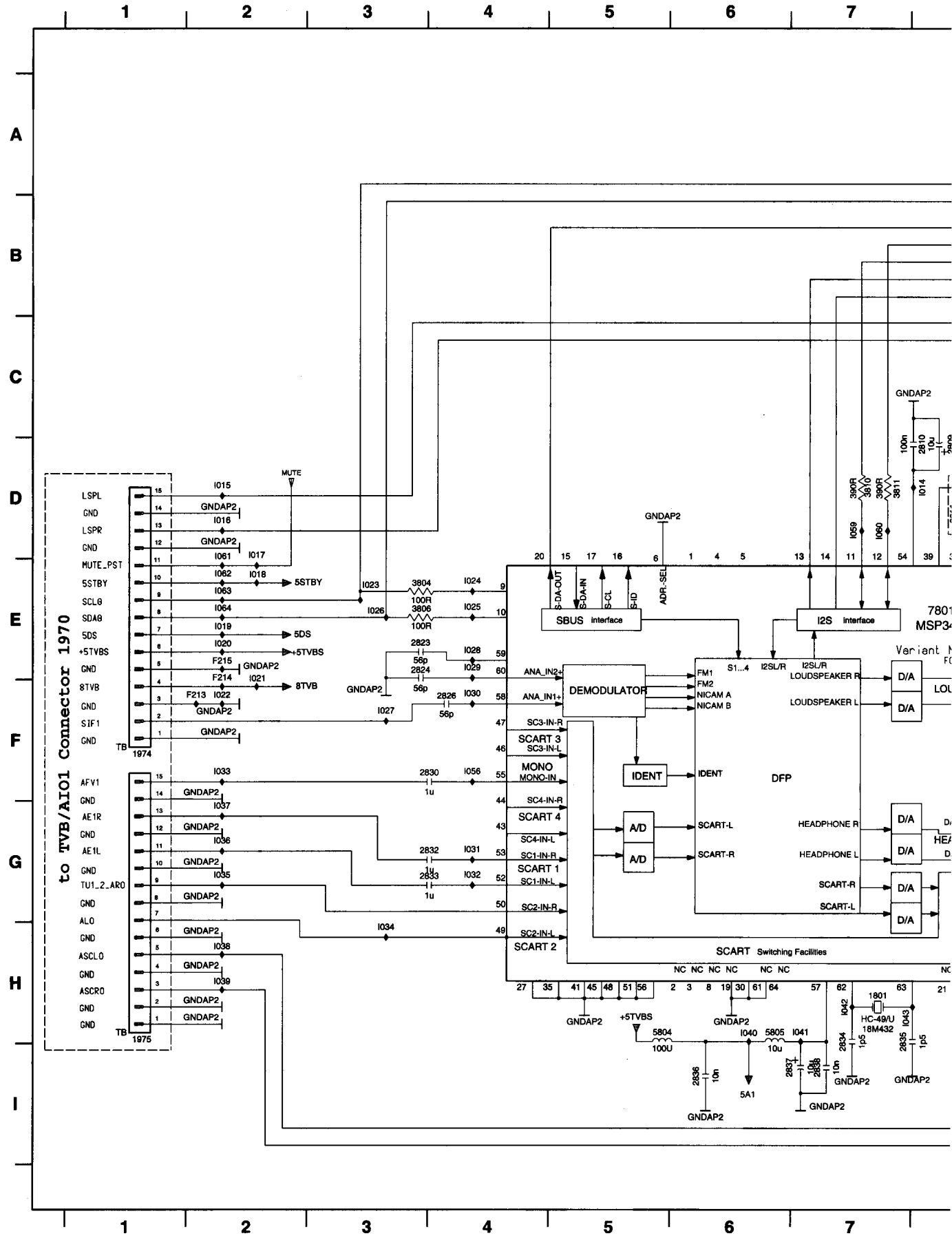

	Interconnections														
Circuit	ACO	AF	AF2	AIO1	AIO2	AL	AMP	AP	COTV	CVB	DE	DOSCD	HA	HPAV	IO_1
page	3-29	3-22	3-30	3-16	3-17	3-23	3-13	3-21	3-14	3-19	3-18	3-32	3-26	3-27	3-11
Circuit	KB1D	KB2D	LS	MFSWD	PS (RUB)	PS (TVB)	PT	SF	SFD	TU1	TU2	TV	VS	VSEC	
page	3-33	3-34	3-8	3-34	3-15	3-7	3-28	3-12	3-31	3-9	3-20	3-10	3-24	3-25	

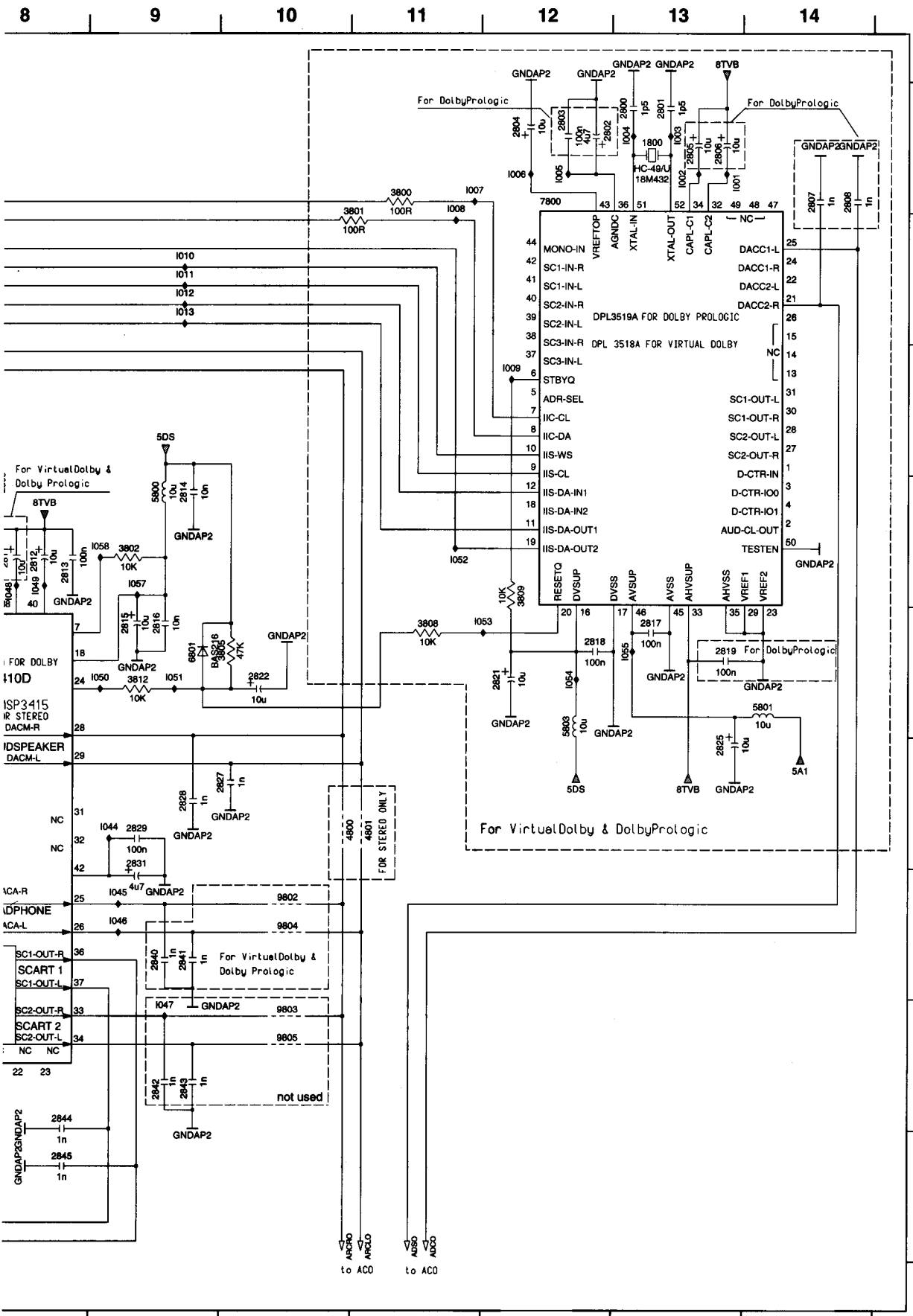

1800 A13
1801 H7
1974 F1
1975 H1
2800 A13
2801 A13
2802 A12
2803 A12
2804 A12
2805 A13
2806 A13
2807 A14
2808 A14
2809 D8
2810 D8
2811 D8
2812 D8
2813 D8
2814 D9
2815 E9
2816 E9
2817 E13
2818 E12
2819 E13
2821 E12
2822 E10
2823 E3
2824 E3
2825 F13
2826 F4
2827 F10
2828 F9
2829 F9
2830 F4
2831 F9
2832 G4
2833 G4
2834 H7
2835 H7
2836 I6
2837 I7
2838 I7
2840 G9
2841 G9
2842 H9
2843 H9
2844 H8
2845 I8
3800 A11
3801 B11
3802 D9
3804 E3
3805 E10
3806 E3
3808 E11
3809 D12
3810 D7
3811 D7
3812 E9
4800 F10
4801 F11
5800 D9
5801 E14
5803 E12
5804 H5
5805 H6
6801 E9
7800 A12
7801 E8
9802 G10
9803 H10
9804 G10
9805 H10
F213 F2
F214 E2
F215 E2
I001 A13
I002 A13
I003 A13
I004 A13
I005 A12
I006 A12
I007 A11
I008 A11
I009 C12
I010 B9
I011 B9
I012 B9
I013 B9
I014 D8
I015 D2
I016 D2
I017 D2
I018 E2
I019 E2
I020 E2
I021 E2
I022 F2
I023 E3
I024 E4
I025 E4
I026 E3
I027 F3
I028 E4
I029 E4
I030 F4
I031 G4
I032 G4
I033 F2
I034 H3
I035 G2
I036 G2
I037 G2
I038 H2
I039 H2
I040 H6
I041 H7
I042 H7
I043 H7
I044 F9
I045 G9
I046 G9
I047 H9
I048 D8
I049 D8
I050 E9
I051 E9
I052 D11
I053 E12
I054 E12
I055 F4
I056 D9
I057 D7
I058 E2
I059 E2
I060 D7
I061 D2
I062 E2
I063 E2
I064 E2

Sound Feature Board (SFD)

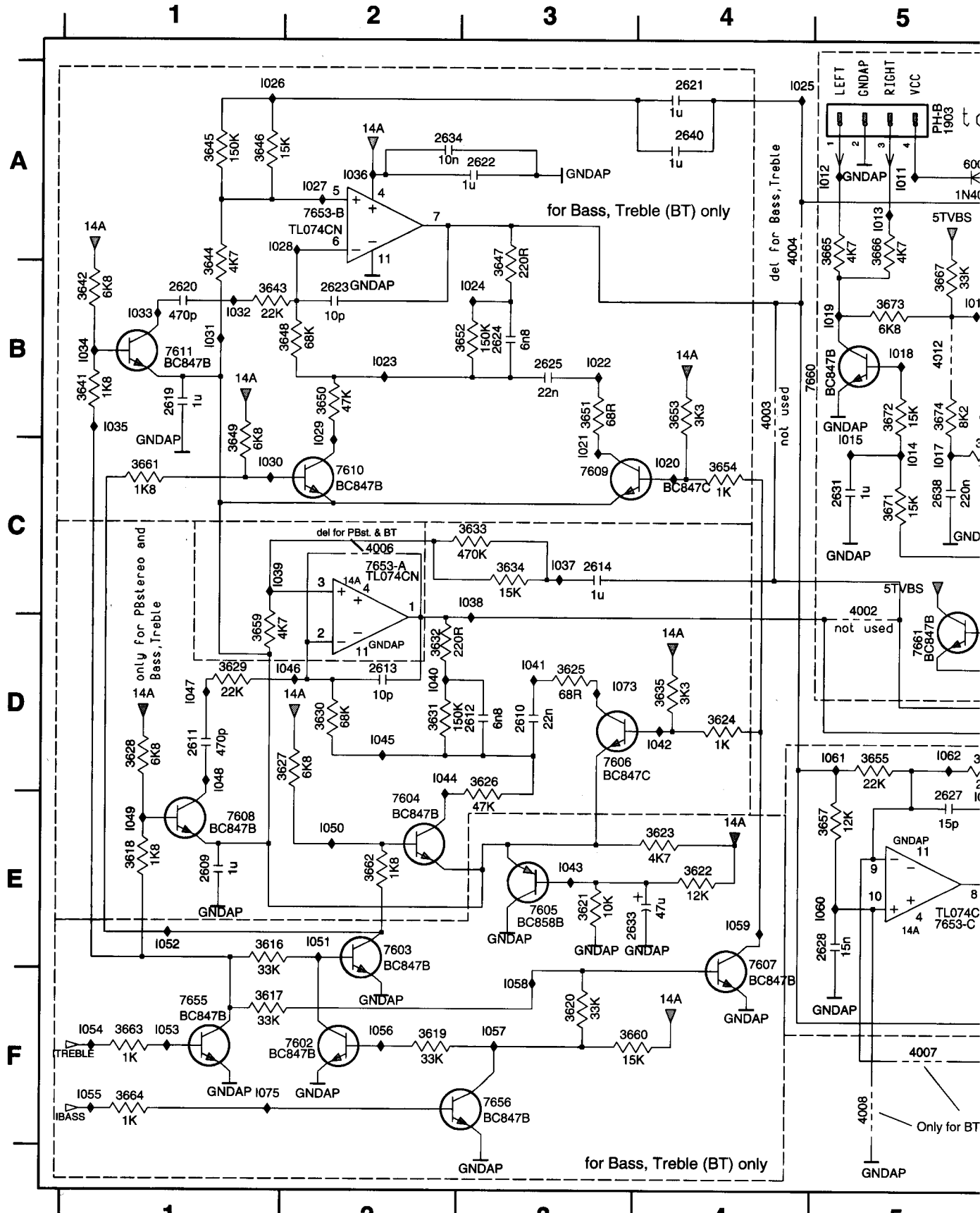

Interconnections															
Circuit	ACO	AF	AF2	AIO1	AIO2	AL	AMP	AP	COTV	CVB	DE	DOSCD	HA	HPAV	IO_1
page	3-29	3-22	3-30	3-16	3-17	3-23	3-13	3-21	3-14	3-19	3-18	3-32	3-26	3-27	3-11
Circuit	KB1D	KB2D	LS	MFSWD	PS (RUB)	PS (TVB)	PT	SF	SFD	TU1	TU2	TV	VS	VSEC	
page	3-33	3-34	3-8	3-34	3-15	3-7	3-28	3-12	3-31	3-9	3-20	3-10	3-24	3-25	

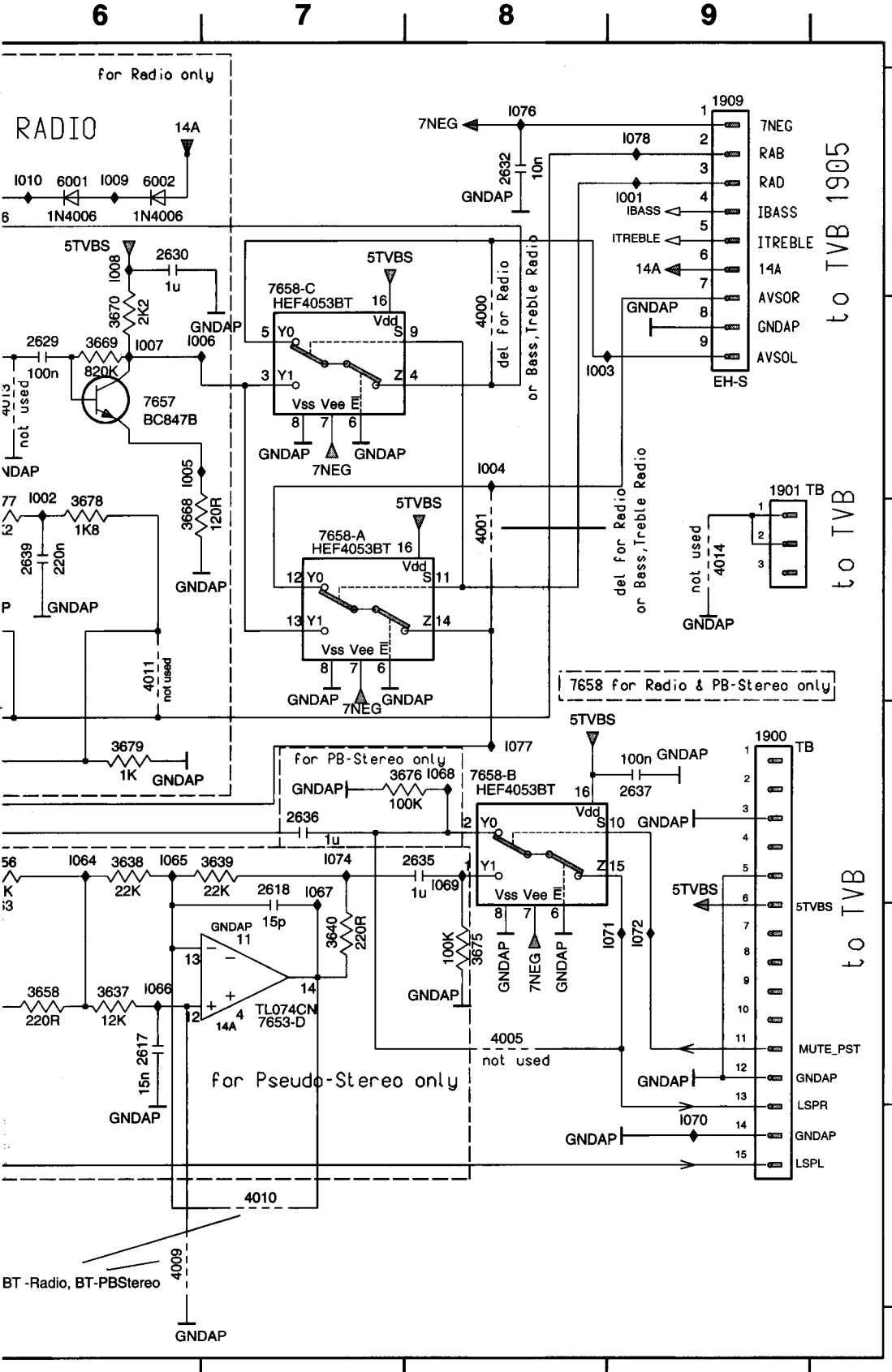

	1900 D9	3662 E2	I021 C3
	1901 B9	3663 F1	I022 B3
	1903 A5	3664 F1	I023 B2
	1909 A9	3665 A5	I024 B3
	2609 E1	3666 A5	I025 A4
	2610 D3	3667 B5	I026 A1
	2611 D1	3668 C6	I027 A2
	2612 D3	3669 B6	I028 A1
	2613 D2	3670 B6	I029 B2
A	2614 C3	3671 C5	I030 C1
	2617 E6	3672 B5	I031 B1
	2618 D7	3673 B5	I032 B1
	2619 B1	3674 B5	I033 B1
	2620 B1	3675 E8	I034 B1
	2621 A4	3676 D8	I035 B1
	2622 A3	3677 C6	I036 A2
	2623 B2	3678 C6	I037 C3
	2624 B3	3679 D6	I038 C3
	2625 B3	4000 B8	I039 C1
	2627 E5	4001 C8	I040 D2
	2628 E5	4002 C5	I041 D3
B	2629 B6	4003 B4	I042 D4
	2630 A6	4004 A4	I043 E3
	2631 C5	4005 E8	I044 D2
	2632 A8	4006 C2	I045 D2
	2633 E4	4007 F5	I046 D2
	2634 A2	4008 F5	I047 D1
	2635 D8	4009 F6	I048 D1
	2636 D7	4010 F7	I049 E1
	2637 D9	4011 C6	I050 E2
	2638 C5	4012 B5	I051 E2
	2639 C6	4013 B6	I052 E1
	2640 A4	4014 C9	I053 F1
C	3616 E1	6000 A5	I054 F1
	3617 F1	6001 A6	I055 F1
	3618 E1	6002 A6	I056 F2
	3619 F2	7602 F2	I057 F3
	3620 F3	7603 E2	I058 F3
	3621 E3	7604 E2	I059 E4
	3622 E4	7605 E3	I060 E5
	3623 E4	7606 D3	I061 D5
	3624 D4	7607 E4	I062 D5
	3625 D3	7608 E1	I063 E5
	3626 D3	7609 C3	I064 D6
	3627 D2	7610 C2	I065 D6
D	3628 D1	7611 B1	I066 E6
	3629 D1	7653-A C2	I067 D7
	3630 D2	7653-B A2	I068 D8
	3631 D2	7653-C E5	I069 D8
	3632 D2	7653-D E7	I070 F9
	3633 C3	7655 F1	I071 E9
	3634 C3	7656 F3	I072 E9
	3635 D4	7657 B6	I073 D3
	3637 E6	7658-A C7	I074 D7
	3638 D6	7658-B D8	I075 F1
	3639 D7	7658-C A7	I076 A8
E	3640 E7	7660 B5	I077 D8
	3641 B1	7661 D5	I078 A9
	3642 B1	I001 A9	
	3643 B1	I002 B6	
	3644 B1	I003 B8	
	3645 A1	I004 B8	
	3646 A1	I005 B6	
	3647 B3	I006 B6	
	3648 B2	I007 B6	
	3649 C1	I008 A6	
	3650 B2	I009 A6	
	3651 B3	I010 A6	
F	3652 B3	I011 A5	
	3653 B4	I012 A5	
	3654 C4	I013 A5	
	3655 D5	I014 C5	
	3656 D6	I015 B5	
	3657 E5	I016 B5	
	3658 E6	I017 C5	
	3659 D1	I018 B5	
	3660 F4	I019 B5	
	3661 C1	I020 C4	

Cinch Out, Scart 2 Board (DOSCD)

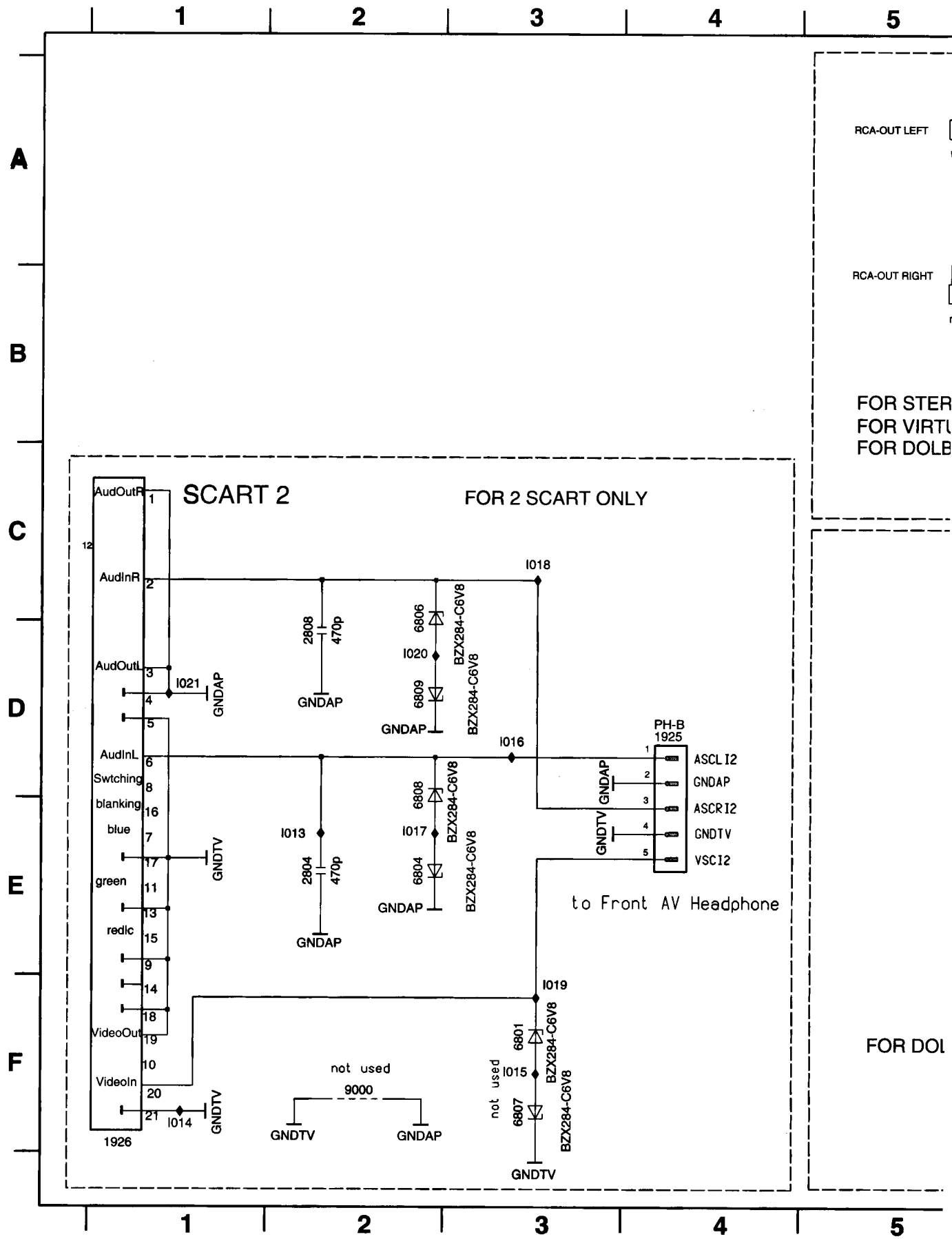

Interconnections															
Circuit	ACO	AF	AF2	AIO1	AIO2	AL	AMP	AP	COTV	CVB	DE	DOSCD	HA	HPAV	IO_1
page	3-29	3-22	3-30	3-16	3-17	3-23	3-13	3-21	3-14	3-19	3-18	3-32	3-26	3-27	3-11
Circuit	KB1D	KB2D	LS	MFSWD	PS (RUB)	PS (TVB)	PT	SF	SFD	TU1	TU2	TV	VS	VSEC	
page	3-33	3-34	3-8	3-34	3-15	3-7	3-28	3-12	3-31	3-9	3-20	3-10	3-24	3-25	

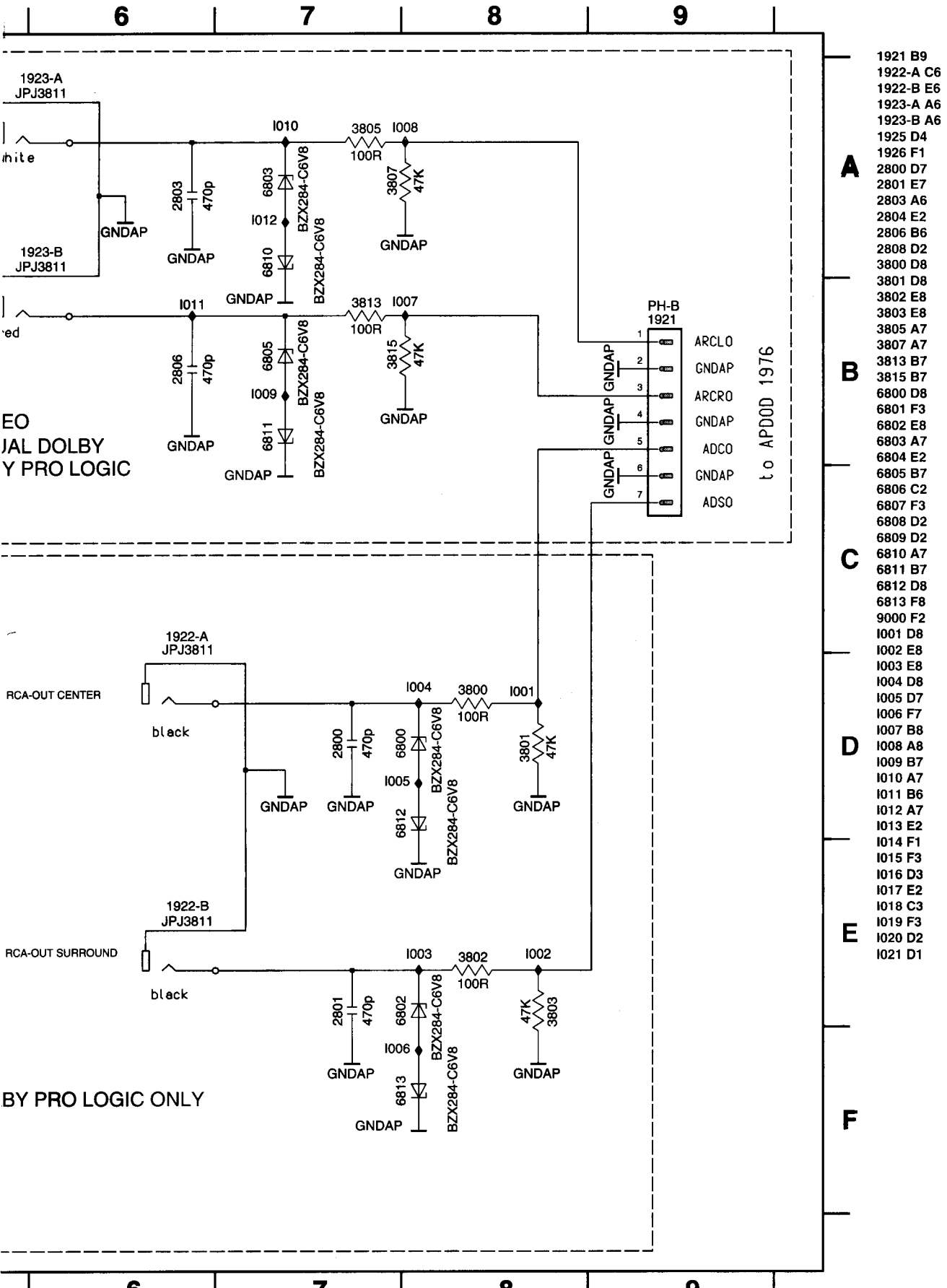

1921 B9
1922-A C6
1922-B E6
1923-A A6
1923-B A6
1925 D4
1926 F1
2800 D7
2801 E7
2803 A6
2804 E2
2806 B6
2808 D2
3800 D8
3801 D8
3802 E8
3803 E8
3805 A7
3807 A7
3813 B7
3815 B7
6800 D8
6801 F3
6802 E8
6803 A7
6804 E2
6805 B7
6806 C2
6807 F3
6808 D2
6809 D2
6810 A7
6811 B7
6812 D8
6813 F8
9000 F2
I001 D8
I002 E8
I003 E8
I004 D8
I005 D7
I006 F7
I007 B8
I008 A8
I009 B7
I010 A7
I011 B6
I012 A7
I013 E2
I014 F1
I015 F3
I016 D3
I017 E2
I018 C3
I019 F3
I020 D2
I021 D1

Keys & Display Board (KB1D)

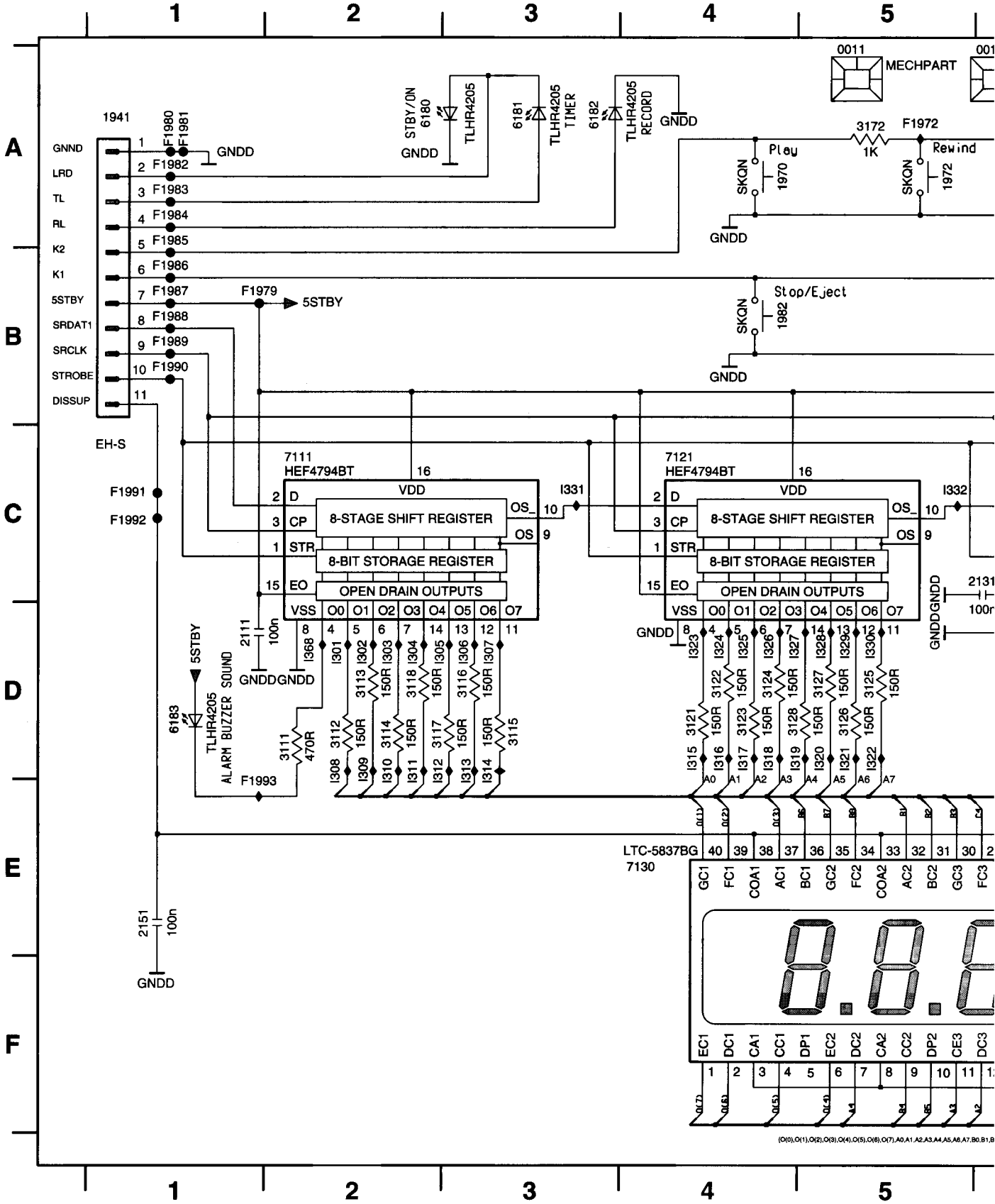

	Interconnections														
Circuit	ACO	AF	AF2	AIO1	AIO2	AL	AMP	AP	COTV	CVB	DE	DOSCD	HA	HPAV	IO_1
page	3-29	3-22	3-30	3-16	3-17	3-23	3-13	3-21	3-14	3-19	3-18	3-32	3-26	3-27	3-11
Circuit	KB1D	KB2D	LS	MFSWD	PS (RUB)	PS (TVB)	PT	SF	SFD	TU1	TU2	TV	VS	VSEC	
page	3-33	3-34	3-8	3-34	3-15	3-7	3-28	3-12	3-31	3-9	3-20	3-10	3-24	3-25	

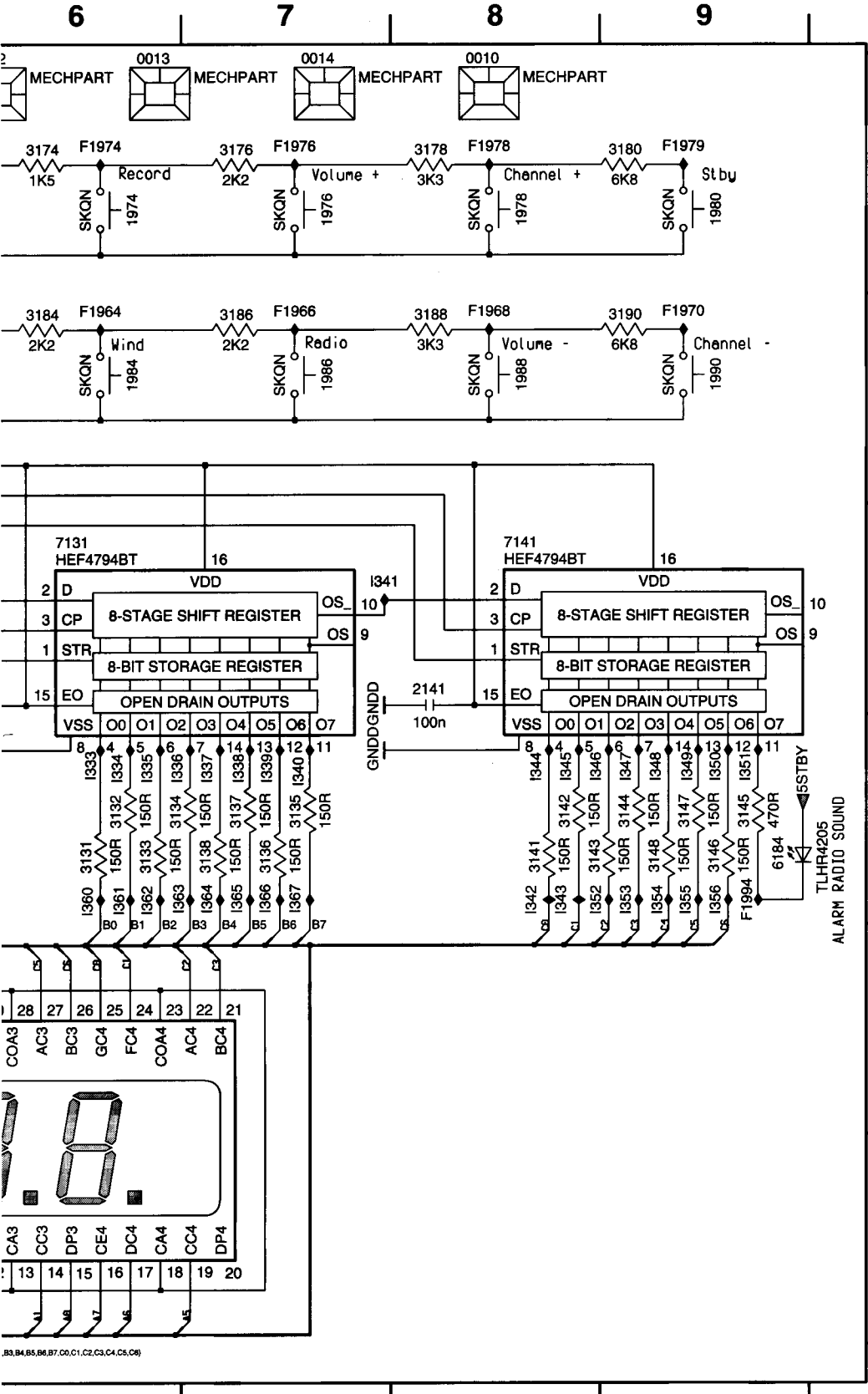

0010 A8 F1972 A5 I356 D9
0011 A5 F1974 A6 I360 D6
0012 A6 F1976 A7 I361 D6
0013 A6 F1978 A8 I362 D6
0014 A7 F1979 B1 I363 D6
1941 A1 F1979 A9 I364 D7
1970 A4 F1980 A1 I365 D7
1972 A5 F1981 A1 I366 D7
1974 A6 F1982 A1 I367 D7
1976 A7 F1983 A1 I368 D2
1978 A8 F1984 A1
1980 A9 F1985 A1
1982 B4 F1986 B1
1984 B6 F1987 B1
1986 B7 F1988 B1
1988 B8 F1989 B1
1990 B9 F1990 B1
2111 D1 F1991 C1
2131 C6 F1992 C1
2141 C8 F1993 E1
2151 E1 F1994 D9
3111 D2 I301 D2
3112 D2 I302 D2
3113 D2 I303 D2
3114 D2 I304 D2
3115 D3 I305 D2
3116 D3 I306 D3
3117 D2 I307 D3
3118 D2 I308 D2
3121 D4 I309 D2
3122 D4 I310 D2
3123 D4 I311 D2
3124 D4 I312 D2
3125 D5 I313 D3
3126 D5 I314 D3
3127 D5 I315 D4
3128 D4 I316 D4
3131 D6 I317 D4
3132 D6 I318 D4
3133 D6 I319 D4
3134 D6 I320 D5
3135 D7 I321 D5
3136 D7 I322 D5
3137 D7 I323 D4
3138 D7 I324 D4
3141 D8 I325 D4
3142 D8 I326 D4
3143 D8 I327 D4
3144 D9 I328 D5
3145 D9 I329 D5
3146 D9 I330 D5
3147 D9 I331 C3
3148 D9 I332 C5
3172 A5 I333 D6
3174 A6 I334 D6
3176 A7 I335 D6
3178 A8 I336 D6
3180 A9 I337 D7
3184 B6 I338 D7
3186 B7 I339 D7
3188 B8 I340 D7
3190 B9 I341 C7
6180 A2 I342 D8
6181 A3 I343 D8
6182 A3 I344 D8
6183 D1 I345 D8
6184 D9 I346 D8
7111 C2 I347 D9
7121 C4 I348 D9
7130 E4 I349 D9
7131 C6 I350 D9
7141 C8 I351 D9
F1964 B6 I352 D8
F1966 B7 I353 D9
F1968 B8 I354 D9
F1970 B9 I355 D9

A
B
C
D
E
F

6
7
8
9

Key Board (KB2D)

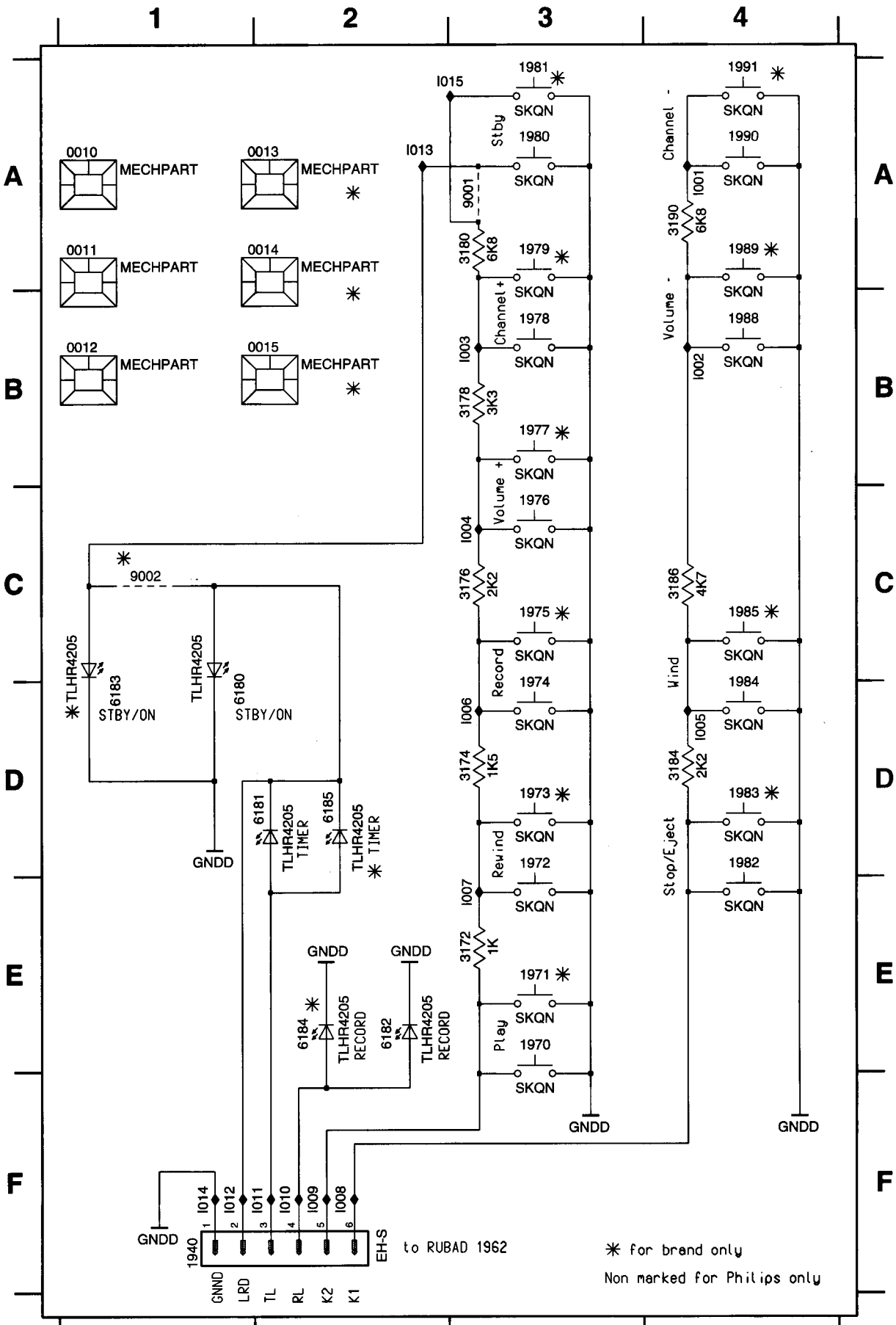

0010 A1
0011 A1
0012 B1
0013 A1
0014 A1
0015 B1
1940 F1
1970 E3
1971 E3
1972 D3
1973 D3
1974 D3
1975 C3
1976 C3
1977 B3
1978 B3
1979 A3
1980 A3
1981 A3
1982 D4
1983 D4
1984 D4
1985 C4
1988 B4
1989 A4
1990 A4
1991 A4
3172 E3
3174 D3
3176 C3
3178 B3
3180 A3
3184 D4
3186 C4
3190 A4
6180 D1
6181 D2
6182 E2
6183 D1
6184 E2
6185 D2
9001 A3
9002 C1
I001 A4
I002 B4
I003 B3
I004 C3
I005 D4
I006 D3
I007 E3
I008 F2
I009 F2
I010 F2
I011 F2
I012 F1
I013 A2
I014 F1
I015 A3

	Interconnections														
Circuit	ACO	AF	AF2	AIO1	AIO2	AL	AMP	AP	COTV	CVB	DE	DOSCD	HA	HPAV	IO_1
page	3-29	3-22	3-30	3-16	3-17	3-23	3-13	3-21	3-14	3-19	3-18	3-32	3-26	3-27	3-11
Circuit	KB1D	KB2D	LS	MFSWD	PS (RUB)	PS (TVB)	PT	SF	SFD	TU1	TU2	TV	VS	VSEC	
page	3-33	3-34	3-8	3-34	3-15	3-7	3-28	3-12	3-31	3-9	3-20	3-10	3-24	3-25	

Mainsfilter Board (MFSWD)

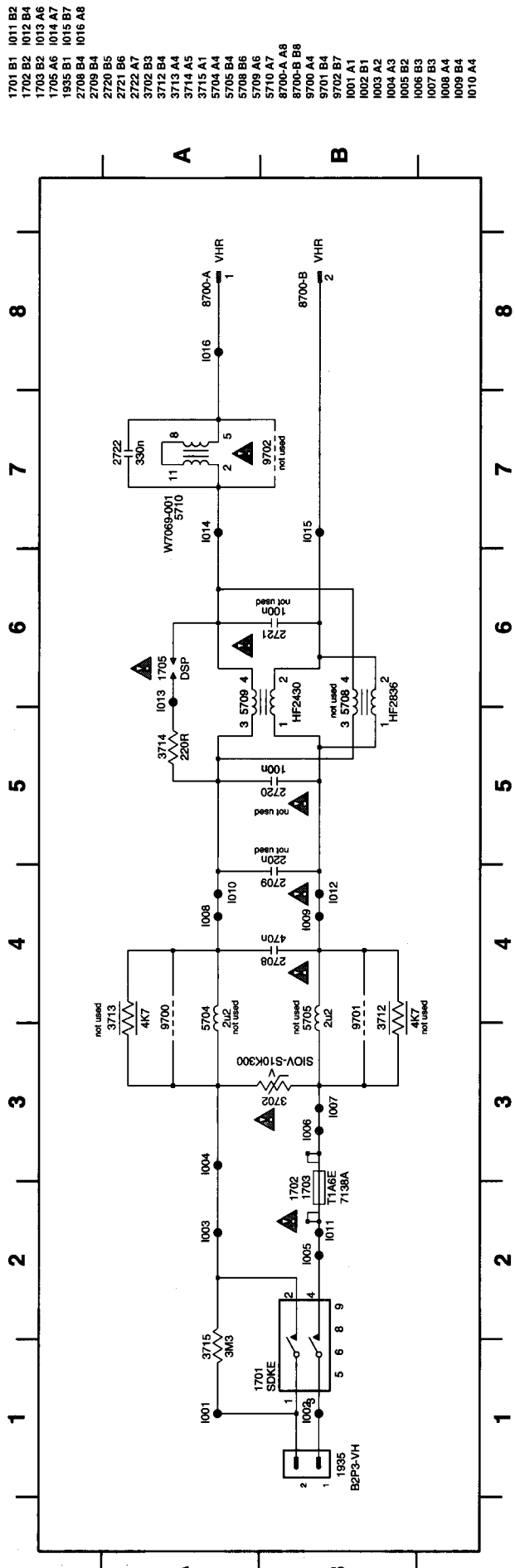

Variant List Tuner 1 - TV Board (TVBAD)

Pos.	PAL BG FM- Mono	PAL I FM- Mono	PAL,SEC DK,K1 FM-Mono	PALBG/I (1 Tuner sets only) FM-Mono	PAL, SEC, BG/DK FM-Mono	PAL, BG/I, SEC L/L' FM-, AM-Mono	PAL, SEC BG/I/DK, SEC L/L' FM, AM, NICAM, Stereo
1700	UV 1316T / AI	UV 1316T / AI	UV 1316T / AI	---	UV 1316T / AI	UV 1316T / AI	UV 1316T / AI
1701	UV 1316	UV 1316	UV 1316	UV 1316	UV 1316	UV 1316	UV 1316
1702	EFC 5,5	EFC 6,0	EFC 6,5	EFC 5,5	EFC 5,5	EFC 5,5	---
1703	---	---	---	EFC 6,0	EFC 6,5	EFC 6,0	---
1704	TPS 5,5	TPS 6,0	TPS 6,5	TPS 5,5	TPS 5,5	Double TPS 5,5/6,0	TPS 5,5
1705	---	---	---	TPS 6,0	TPS 6,5	---	---
1707	G1961M	J1980M	K2955M	G1965M	G1961M	---	---
1708	---	---	---	---	K2955M	G1965M	K3953M
1709	---	---	---	---	---	---	G3956M
1710	---	---	---	---	---	---	K9456M
1711	---	---	---	---	---	K9456M	---
2701	---	---	---	---	---	220p	120p
2708	---	---	---	---	---	47p	47p
2719	3n3	3n3	3n3	3n3	3n3	3n3	---
2720	---	---	---	---	---	2µ2	2µ2
2721	---	---	---	---	---	120p	220p
2722	22µ	22µ	22µ	22µ	22µ	22µ	---
2723	0,47µ	0,47µ	0,47µ	0,47µ	0,47µ	---	---
2740	47µ	47µ	47µ	47µ	47µ	47µ	---
2725	---	---	---	---	---	470n	470n
3702	---	---	---	270R	180R	1R	1R
3703	---	---	---	---	4k7	---	---
3704	---	---	---	1k2	1k2	1k2	---
3705	470R	470R	470R	470R	470R	470R	---
3706	---	---	---	470R	470R	470R	---
3707	560R	560R	560R	1k2	1k2	1k2	560R
3710	---	---	---	---	4k7	---	---
3711	560R	560R	560R	560R	560R	560R	820R
3713	---	---	---	1k	1k5	0R	0R
3714	330R	270R	270R	270R	270R	180R	---
3716	---	---	---	1k5	1k5	1k5	1k5
3717	1k5	1k5	1k5	1k5	1k5	1k5	---
3719	---	---	---	---	---	1k5	1k5
3724	---	---	---	4k7	4k7	4k7	4k7
3725	1k5	1k0	1k5	1k5	1k5	1k5	1R
3727	---	---	---	---	---	---	330R
3728	---	---	---	---	---	---	4k7
3729	---	---	---	---	---	---	4k7
3733	---	---	---	---	---	100R	100R
3740	---	---	---	---	---	4k7	---
3741	---	---	---	---	---	4k7	---
3742	390k	390k	390k	390k	390k	390k	---
3743	1k	1k	1k	1k	1k	1k	---
3744	680R	680R	680R	680R	680R	680R	---
3745	470R	470R	470R	470R	470R	470R	---
4700	0R	0R	0R	---	---	---	---
4701	0R	0R	0R	---	---	---	---
4702	---	---	---	---	0R	---	---
4704	---	---	---	---	---	0R	0R
4707	0R	0R	0R	0R	---	---	0R
4711	---	---	---	---	0R	---	---
4730	---	---	---	---	---	---	not used
5700	1µH	1µH	1µH	1µH	1µH	---	---
5701	---	---	---	---	---	41645	41645
5702	---	---	---	---	---	---	---
5704	15µH	15µH	15µH	15µH	15µH	10µH	---
5712	---	---	---	15µH	15µH	---	---
6700	---	---	---	---	BA792	---	---
6701	---	---	---	---	---	---	BA792
6702	---	---	---	---	---	---	BA792
6705	---	---	---	---	BA792	---	---
6706	---	---	---	---	---	BA792	---
6707	---	---	---	---	---	BA792	---
7205	*TDA 8840/41	*TDA 8840/41	TDA 8842	*TDA 8840/41	TDA 8842	TDA 8842	*TDA 8842 / TDA 8844
7701	---	---	---	HEF 4053	HEF 4053	HEF 4053	HEF 4053
7705	---	---	---	---	---	TDA9830	---
7709	---	---	---	---	PDCT124ET	---	---
7710	---	---	---	---	PDCT124ET	---	---
7711	BC 847B	BC 847B	BC 847B	BC 847B	BC 847B	BC 847B	---
7713	---	---	---	---	---	---	PDCT124ET
7714	---	---	---	---	---	---	PDCT124ET
7715	---	---	---	---	---	PDCT124ET	---
7716	---	---	---	---	---	PDCT124ET	---
7720	---	---	---	---	---	---	TDA 9818T
9701	0R	0R	0R	0R	0R	0R	---
9705	---	---	---	---	---	---	0R
9706	---	---	---	---	---	---	0R
Demodulator for:							
Video	IC 7205	IC 7205	IC 7205	IC 7205	IC 7205	IC 7205	IC 7205
Video (PAL BG)	IC 7205	---	---	IC 7205	IC 7205	IC 7205	IC 7720
Audio (FM-mono)	IC 7205	IC 7205	IC 7205	IC 7205	IC 7205	IC 7205	---
Audio (FM-stereo)	---	---	---	---	---	---	IC 7801 (APDOD)
NICAM	---	---	---	---	---	---	IC 7801 (APDOD)
Audio AM	---	---	---	---	---	IC 7705	IC 7720

TDA 9818T: + 2728, 2729, 2730, 2731, 2732, 2733, 2734, 2735, 3735, 3736, 3737, 3738, 5707, 5708, 7712, 9702.
TDA 9830 : + 2714, 2716, 2717.

*TDA 8844 for tubes with 25'
*TDA 8841 for non-standard NTSC-Pb

Variant List Tuner 2 - Recorder Unit Board (RUBAD)

	PAL BG	PAL I	PAL,SEC DK,K1	PAL, SEC, BG/DK	PAL, BG/I, SEC L/L'	PAL, SEC BG/I/DK, SEC L/L'
Pos.	FM-Mono	FM- Mono	FM-Mono	FM-Mono	FM-, AM-Mono	FM, AM, NICAM Stereo
1300	---	---	---	---	K3953M	K3953M
1301	UV 1316	UV 1316	UV 1316	UV 1316	UV 1316	UV 1316
1302	G1961M	J1980M	K2955M	G3956M	---	G3956M
1305	---	---	---	K9463M	K9456M	K9456M
1304	TPS 5,5	TPS 6,0	TPS 6,5	TPS 5,5	TPS 5,5	TPS 5,5
1306	EFC 5,5	EFC 6,0	EFC 6,5	EFC 5,5	EFC 5,5	---
1307	---	---	---	EFC 6,5	EFC 6,0	---
2311	---	---	---	---	100n	100n
2316	---	---	---	---	220p	220p
2317	---	---	---	---	120p	120p
2322	22n	22n	22n	22n	22n	---
2323	22µ	22µ	22µ	22µ	22µ	---
3310	470R	470R	470R	470R	470R	---
3312	---	---	---	470R	470R	---
3302	---	---	---	---	5k6	5k6
3306	---	---	---	---	---	4k7
3308	---	---	---	---	100R	100R
3311	---	---	---	3k3	3k3	3k3
3313	---	---	---	220R	220R	220R
3314	330R	270R	270R	270R	270R	270R
3316	---	---	---	---	---	4k7
3321	---	---	---	4k7	4k7	4k7
3322	---	---	---	4k7	4k7	4k7
3323	2k7	2k7	2k7	2k7	2k7	---
3325	---	---	---	4k7	4k7	4k7
4301	---	---	---	---	---	---
4302	---	---	---	---	0R	---
4303	0R	0R	0R	0R	---	---
4304	---	---	---	---	---	0R
4305	0R	0R	0R	---	---	---
4306	0R	0R	0R	---	---	---
4307	0R	0R	0R	---	---	---
5301	---	---	---	---	41645	41645
5306	---	---	---	---	---	---
5307	---	---	---	---	---	---
6300	---	---	---	---	---	BA792
6301	---	---	---	---	---	BA792
6303	---	---	---	BA792	BA792	BA792
6304	---	---	---	BA792	BA792	BA792
7300	---	---	---	---	PDCT124ET	PDCT124ET
7301	---	---	---	HEF4053	HEF4053	HEF4053
7302	---	---	---	---	---	PDCT124ET
7304	---	---	---	---	---	PDCT124ET
7307	---	---	---	PDCT124ET	PDCT124ET	PDCT124ET
7308	---	---	---	PDCT124ET	PDCT124ET	PDCT124ET
7309	TDA 9817 T	TDA 9817 T	TDA 9817 T	TDA 9817 T	TDA 9818 T	TDA 9818 T
Demodulator for:						
Video	IC 7309	IC 7309	IC 7309	IC 7309	IC 7309	IC 7309
Audio (FM-mono)	IC 7309	IC 7309	IC 7309	IC 7309	IC 7309	---
Audio (FM-stereo)	---	---	---	---	---	IC 7670 (AP)
NICAM	---	---	---	---	---	IC 7670 (AP)
Audio AM	IC 7309	IC 7309	IC 7309	IC 7309	IC 7309	IC 7309

Component Mapping TV Board (TVBAD)

Components side

0205	C10	2734	D7	5518	C7	9198	C2	9764	C8
0300	D3	2740	D10	5519	A5	9221	D9	9765	D8
0310	E2	2905	A9	5525	A5	9225	B10	9821	G8
0450	F10	2906	B9	5526	C5	9226	C10	9822	G8
0500	C3	2906	B10	5525	D3	9227	F10	9824	F8
0510	A7	2915	B10	5526	B3	9228	C10	9825	F8
0800	G9	3177	B2	5700	B8	9229	C10	9826	F8
0970	B10	3179	C2	5701	B8	9230	C10	9827	G7
1001	F3	3181	C1	5703	B7	9231	C10	9828	G7
1002	F1	3182	C2	5704	E8	9232	D9	9829	G8
1010	G3	3186	B1	5705	B8	9233	F10	9830	F8
1200	C10	3187	C2	5706	D9	9234	F10	9831	F8
1201	C10	3193	C2	5707	B8	9235	F10	9832	F8
1300	G5	3196	C2	5708	C7	9236	F10	9833	F8
1301	G4	3197	C1	5712	E9	9237	F9	9834	F8
1302	G3	3198	C2	6175	C1	9238	F10	9836	F8
1303	D7	3199	C10	6176	C2	9239	F10	9837	F8
1304	G6	3206	C10	6178	C1	9244	F10	9838	F8
1391	F6	3207	C9	6180	C2	9245	F9	9900	C10
1700	B9	3209	F10	6190	B2	9247	F8	9903	B10
1701	A8	3252	D8	6191	B2	9248	F8	9920	B10
1702	D8	3253	D10	6201	D10	9249	F9	9921	B9
1703	D8	3253	D10	6202	D10	9250	F9	9922	C10
1704	E8	3301	C4	6221	E9	9251	F9	9923	A10
1705	E9	3302	C4	6234	A5	9252	F9	9924	B9
1707	C9	3303	C5	6235	E10	9256	C9	9925	B9
1708	C8	3304	F5	6236	E10	9302	F4	9927	F8
1709	C7	3305	F4	6301	F4	9303	F3	9928	D10
1710	C8	3306	F4	6302	F4	9304	F4	9929	C10
1711	D8	3307	D5	6303	F4	9305	F5	9930	B10
1905	G10	3308	D5	6304	F4	9306	F6	9931	A10
1931	F3	3311	E4	6314	E4	9307	F6	9932	B9
1932	G5	3312	E4	6322	F4	9308	F7	9933	B10
1933	E3	3313	E4	6325	D3	9309	F4	9934	A10
1934	G1	3314	G4	6326	D3	9312	F4	9936	B9
1950	B6	3315	G4	6340	F6	9313	F4	9937	C10
1955	B1	3316	F3	6341	G5	9314	G4	9940	B10
1958	B1	3320	D5	6342	E6	9315	G4	9942	B9
1961	C2	3325	F3	6350	D6	9316	F4	9943	C10
1963	F9	3326	E3	6351	D6	9317	F3	9944	C10
1964	B10	3328	D4	6355	D6	9319	D4	9945	C8
1966	D7	3334	G1	6356	E7	9320	F5	9946	C9
1969	B10	3335	F3	6358	F6	9321	F7	9948	C10
1970	A10	3339	F7	6370	E6	9322	F7	9949	E8
1978	A10	3348	G6	6372	G7	9323	F7	9950	B10
1992	F2	3350	D6	6373	G8	9324	F7	9952	C10
1993	F2	3360	F7	6376	E8	9325	F6	9954	C9
1995	E2	3361	F7	6377	F8	9326	F6	9957	B9
1996	D1	3362	C7	6378	F9	9327	F6	9958	C9
1997	D1	3370	C7	6380	E8	9328	F7	9960	C10
1998	F1	3380	F7	6381	E8	9329	F7	9961	C9
1999	D2	3391	F7	6382	F7	9330	F7		
2175	C1	3402	F1	6385	G6	9331	F7		
2176	C1	3403	C1	6390	F6	9333	F7		
2186	A1	3418	F1	6391	F6	9334	F6		
2202	D9	3419	C1	6392	E7	9335	D7		
2215	C9	3450	C9	6393	E7	9336	C7		
2216	C9	3451	F9	6400	E2	9337	D7		
2217	E10	3452	F10	6403	E2	9363	D7		
2217	E10	3457	F9	6404	E2	9363	D7		
2227	D8	3459	G7	6405	E2	9390	G8		
2228	C9	3464	F6	6406	F1	9391	G8		
2233	C9	3468	F10	6407	F1	9392	D5		
2301	F4	3469	F10	6452	G7	9393	D5		
2302	G4	3473	F8	6453	G7	9421	F2		
2303	G4	3474	F7	6454	F7	9422	D1		
2304	F4	3502	A3	6455	F8	9451	F6	F10	
2305	F3	3503	A3	6456	G6	9452	F6	F6	
2306	F5	3504	A3	6520	C6	9453	F7	F10	
2307	G4	3505	A4	6521	C4	9454	F7	F10	
2308	F5	3509	C6	6522	D4	9455	F7	F10	
2309	E4	3512	B6	6523	C5	9456	F7	F10	
2310	E4	3515	C7	6524	D4	9457	G7		
2311	E4	3516	C7	6526	B4	9509	C6		
2312	E4	3520	C4	6528	A5	9511	C5		
2313	E4	3521	A4	6537	A6	9512	C4		
2314	D6	3522	C5	6537	B9	9515	C7		
2315	D3	3523	C4	6538	B9	9516	C7		
2316	E4	3524	A3	6540	B6	9518	C6		
2317	D4	3525	B3	6541	A7	9522	C5		
2323	F4	3527	C4	6542	B7	9523	C4		
2339	F5	3529	A7	6543	B7	9524	D4		
2340	F5	3530	B6	6544	B7	9525	C5		
2341	F6	3531	B6	6545	A7	9526	A4		
2344	F6	3532	B6	6547	A7	9530	B3		
2350	F6	3534	B6	6549	B7	9531	C3		
2351	F6	3535	B6	6550	A6	9532	C4		
2352	E6	3537	B6	6568	B7	9533	C4		
2353	D6	3538	B6	6900	A9	9534	C6		
2354	D6	3539	B6	6901	A9	9535	C6		
2356	E7	3545	A7	6902	B9	9536	B6		
2359	D6	3561	A6	6903	A10	9537	B6		
2360	E6	3562	A6	6904	B10	9538	A6		
2370	E6	3563	A6	6905	B9	9539	A6		
2371	E6	3564	A6	6906	B10	9540	A4		
2372	C8	3565	A6	6909	B10	9541	A6		
2374	D10	3566	A5	6908	B9	9542	A4		
2380	E7	3568	B7	6909	B10	9543	B3		
2383	F6	3569	B7	6910	A10	9544	C3		
2385	G6	3700	A7	6911	A10	9545	A6		
2391	F6	3701	B7	6912	B10	9546	A6		
2393	E7	3719	F9	6913	B10	9561	A3		
2407	E2	3726	D9	7180	C2	9562	F7		
2408	E2	3727	D8	7181	C2	9565	A6		
2451	F10	3807	C8	7182	C2	9566	F7		
2452	E10	3810	G8	7183	C2	9620	F7		
2455	F10	3814	F8	7184	C1	9621	G10		
2459	G7	3816	G8	7185	C2	9622	G10		
2460	F10	3818	F8	7186	D2	9623	F10		
2461	F9	3821	G8	7187	D1	9624	F10		
2501	A4	3827	G8	7188	D2	9625	G10		
2502	A4	3828	F8	7205	D9	9626	G10		
2503	A4	3832	G8	7300	C3	9627	G10		
2510	C6	3833	G8	7310	C3	9629	G10		
2514	C6	3834	G8	7340	F5	9701	C10		
2517	C6	3835	G8	7341	G6	9702	F10		
2518	C4	3837	G8	7355	D6	9705	D8		
2519	C4	3839	F8	7370	G7	9706	C10		
2520	C4	3841	G9	7375	F10	9722	D8		
2522	C4	3844	G9	7381	G6	9723	C9		
2523	D4	3847	C10	7391	F7	9724	C8		
2524	E5	3860	F8	7450	F10	9725	C9		
2525	C3	3861	F8	7455	F10	9726	C9		
2526	D3	3864	G9	7501	A4	9729	B8		
2527	C3	3906	A9	7510	C6	9730	B8		
2528	A5	3909	A9	7520	C3	9731	C7		
2530	C5	3947	B9	7521	C4	9732	B7		
2531	C5	5190	A2	7555	A6	9733	D8		
2535	B6	5301	F4	7556	A6	9738	C7		
2537	A6	5302	F3	7705	D8	9740	F8		
2539	A6	5303	F3	7804	F9	9741	F8		
2544	B7	5304	G4	7806	C10	9742	F8		
2545	A7	5305	G4	8013	B10	9743	F8		
2548	A6	5310	E4	8025	C10	9747	F8		
2563	A5	5312	D4	8025	D2	9748	F8		
2702	A9	5313	D4	8026	F10	9749	F8		
2704	B8	5330	F5	8026	F10	9750	F8		
2709	D9	5340	F6	8027	B2	9751	F8		
2713	D8	5341	G6	8027	B7	9752	F8		
2714	F8	5350	D6	8028	C1	9753	F8		
2717	F8	5351	D6	8028	C1	9754	F8		
2720	C8	5360	D6	8176	B2	9755	F9		
2722	C8	5370	F7	9190	A2	9756	F9		
2723	C9	5380	F6	9193	B2	9757	B8		
2727	B7	5500	A4	9194	B2	9759	A7		
2728	C7	5501	A4	9196	C2	9760	A8		
2730	C7	5502	C6	9197	C1	9761	A8		

Solder side

2177	D9	3172	D10	3613	F1	4704	B4		
2178	D10	3174	C10	3614	G1	4707	C3		
2179	D10	3174	C10	3615	G1	4711	C3		
2200	C1	3175	C9	3702	D2	4723	C3		
2201	D2	3176	D10	3703	C4	4724	D3		
2203	D2	3183	C9	3704	D3	4726	C3		
2204	C1	3184	C9	3705	D2	4727	A4		
2205	D2	3188	D10	3706	D3	4728	C2		
2207	C2	3194	D10	3707	D3	4730	D3		
2208	D1	3195	C10	3708	A3	4800	G2		
2209	D1	3200	F2	3709	A3	4801	F2		
2210	D2	3201	F2	3710	B3	4802	F2		
2211	D2	3202	F2	3711	B3	4803	F2		
2213	D1	3203	C1	3712	E3	4821	G2		
2214	D2	3204	C1	3713	E3	4822	G2		
2215	E2	3205	C2	3714	E3	4823	F2		
2218	D1	3208	D1	3715	E3	4824	G3		
2219	D1	3209	D2	3716	E3	4825	G2		
2220	D1	3210	D2	3717	E3	4901	A1		
2221	D2	3211	C2	3718	D2	4902	B2		
2222	D2	3212	C2	3719	C3	4904	B2		
2223	C2	3213	C1	3720	C3	4905	B1		
2224	C2	3216	D2	3724	C3	4906	B2		
2225	C2	3217	D2	3725	C3	4907	B2		
2226	D2	3218	F1	3726	C3	4912	F1		
2229	D2	3219	F1	3729	C3	4920	B1		
2230	D2	3220	F1	3730	C3	4922	D1		
2231	D2	3221	D1	3731	C3	4923	B1		
2232	C1	3222	D1	3733	B3	4924	F1		
2233	D1	3223	E2	3735	C4	4939	F1		
2235	D1	3224	E2	3736	C4	4939	B2		
2236	D1	3226	E2	3737	C4	4939	C1		
2237	C2	3227	E1	3738	C4	4956	C1		
2238	A4	3228	E1	3740	D3	4957	C1		
2318	E8	3229	E1	3741	D3	5200	F2		
2319	D8	3230	E1	3742	D1	5201	F2		
2320	E8	3231	E2	3743	D1	5202	F2		
2321	E8	3232	E2	3744	D1	5203	C2		
2335	E8	3233	E2	3745	D1	5204	C2		
2336	E8	3234	C2	3801	G3	5205	C1		
2342	G6	3237	C2	3802	G3	5702	C2		
2343	G6	3239	D2	3803	G3	5801	C2		
2345	G6	3242	C2	3804	F4	5802	G3		
2346	G6	3243	E2	3805	F3	5803	G3		
2355	D5	3244	E2	3808	G4	6183	D9		
2357	F4	3245	E2	3809	G2	6184	C10		
2358	F4	3247	E2	3810	F3	6185	C9		
2361	E9	3248	C2	3811	G3	6200	F1		
2362	F9	3249	C2	3812	G3	6201	F1		
2373	D1	3250	C2	3822	C3	6205	F1		
2381	F5	3251	C1	3823	F3	6220	F1		
2382	F5	3252	C1	3825	G3	6515	F8		
2400	E10	3254	D1	3826	C5	6357	F4		
2401	F10	3255	D1	3829	G3	6374	G4		
2402	F10	3256	E1	3866	F2	6387	G5		
2403	E10	3317	D8	3868	F2	6450	F1		
2404	E9	3318	E8	3869	F2	6451	F2		
2405	E9	3319	E8	3870	G2	6548	A4		
2406	E9	3321	E8	3884	G2	6551	A5		
2453	F1	3330	E8	3885	G2	6700	B4		
2454	F1	3331	E8	3886	G2	6701	C3		
2456	F1	3336	E8	3887	F2	6702	C3		
2457	G4	3341	G6	3888	F2	6705	C3		
2458	G4	3342	G6	3889	G2	6706	C3		
2462	G5	3343	G6	3890	G2	6707	C3		
2463	F1	3344	G6	3899	G2	7201	C1		
2464	F1	3346	G6	3900	A2	7204	C2		
2465	F1	3347	G6	3901	B2	7206	F1		
2504	A7	3355	C5	3902	A2	7208	F1		
2529	A5	3356	C5	3903	B2	7209	F1		
2558	A5	3357	D5	3904	A2	7210	D1		
2559	A5	3358	D5	3905	A2	7211	F1		
2560	A5	3362	E5	3907	B2	7212	F1		
2562	A5	3363	E5	3908	B2	7215	F2		
2603	G1	3371	G4	3910	A2	7238	C2		
2604	G1	3372	G4	3911	A2	7350	C4		
2605	G1	3373	G3	3912	B2	7371	C4		
2606	F1	3375	G3	3913	A1	7382	C5		
2607	F1	3381	F4	3914	A1	7393	F4		
2608	F1	3382	F4	3915	A1	7400	F9		
2700	B3	3383	G5	3916	A1	7401	F9		
2701	B4	3384	G5	3917	B1	7451	F1		
2703	B3	3385	G5	3918	B2	7452	F1		
2705	C3	3386	G5	3919	A1	7453	G4		
2707	C3	3392	F4	3920	B2	7454	G4		
2708	F5	3394	F4	3921	A1	7543	A4		
2710	D2	3395	F4	3922	B1	7547	A4		
2711	B3	3396	F4	3923	A1	7651	G1		
2712	D3	3397	F4	3924	A1	7701	F3		
2715	F2	3400	F10	3925	B1	7702	D2		
2716	E3	3401	F10	3926	B1	7704	F2		
2718	D2	3404	F10	3927	B1	7706	C3		
2719	D3	3405	F10	3928	A1	7709	B3		
2721	D2	3406	F9	3929	A1	7710	C1		
2725	D2	3407	F10	3930	A1	7711	C1		
2726	D2	3408	F10	3931	A1	7712	C4		
2729	C4	3409	F9	3932	A1	7713	C3		
2731	C4	3410	F9	3933	B1	7714	C3		
2732	C4	3411	F9	3934	A1	7715	D3		
2733	C4	3412	F9	3935	B2	7716	D3		
2735	C4	3413	F9	3936	B1	7720	C4		
2741	D1	3414	F10	3937	B1	7800	G4		
2800	G3	3415	F9	3938	B1	7801	G4		
2802	G3	3416	F9	3939	B1	7802	F3		
2803	F2	3417	F9	3940	B1	7803	F4		
2804	F3	3420	F10	3941	B1	7807	G3		
2806	F2	3421	F9	3942	A1	7808	G3		
2807	F2	3453	F1	3943	B1	7900	B2		
2809	G3	3454	F1	3945	A2	7901	B2		
2810	F3	3455	F2	3946	A2	7902	A2		
2811	F3	3456	F1	3951	B2	7903	A2		
2812	G2	3458	G1	3952	B2	7904	B1		
2813	G2	3460	G4	4195	C10	7905	B2		
2814	G2	3461	G4	4196	C10	7906	B1		
2815	G2	3462	G4	4197	B9	7907	B1		
2816	G2	3463	G4	4200	D1	7908	B3		
2817	F2	3465	F1	4201	D1	7909	B1		
2818	F2	3466	G4	4202	D1				
2819	G2	3467	F1	4203	C1				
2820	F3	3470	F1	4228	F1				
2901	B3	3471	F1	4230	F1				
2902	A2	3472	F1	4240	D2				
2903	B2	3506	A7	4241	F1				
2904	B2	3510	C5	4242	F1				
2907	B1	3511	C5	4321	E8				
2908	B1	3526	B7	4359	C5				
2909	A1	3528	A4	4400	F10				
2910	B1	3540	B4	4401	F9				
2911	A1	3541	B4	4402	F9				
2912	A1	3542	B4	4416	F9				
2913	A1	3543	A4	4418	F9				
2914	B1	3544	A4	4444	A9				
2915	A1	3546	A4	4450	F1				
2916	B1	3547	A4	4451	F1				
2917	B1	3548	A4	4452	F1				
2918	B1	3549	A4	4453	G5				
2919	B1	3550	A4	4454	G4				
2920	B2	3551	A4	4455	A5				
2921	A1	3552	A4	4456	B5				
2922	A1	3553	A4	4556	B5				
2923	D1	3555	A5	4600	C1				
2924	B1	3556	A5	4601	C1				
2925	A2	3557	A5	4621	G1				
2951	B2	3567	B4	4622	G1				
3169	C10	3610	G1	4700	D2				
3170	D9	3611	G1	4701	F2				
3171	C9	3612	G1	4702	B3				

WAVEFORM PHOTOGRAPHS

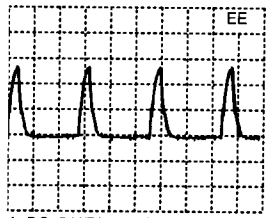

1

A: DC, 5 V/Div, 5us/Div
Transistor 7300 Gate

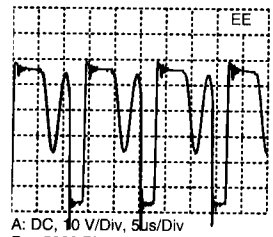

2

A: DC, 10 V/Div, 5us/Div
Pos 5330 Pin 8

3

A: DC, 5 V/Div, 5us/Div
IC 7310 Pin 5

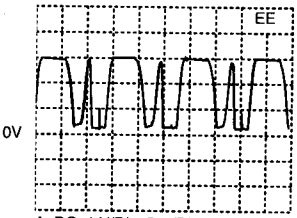

4

A: DC, 1 V/Div, 5us/Div
IC 7310 Pin 2

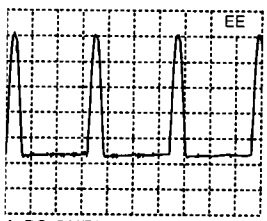

5

A: DC, 5 V/Div, 20us/Div
Conn. 8027 Pin 3 HEATER

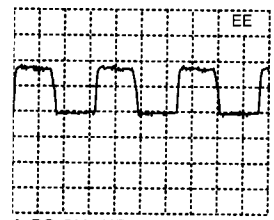

6

A: DC, 500mV/Div, 20us/Div
Transistor 7501 Basis

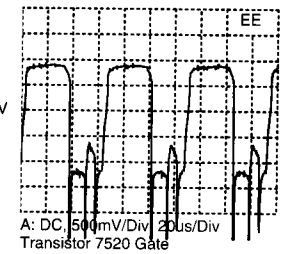

7

A: DC, 500mV/Div, 20us/Div
Transistor 7520 Gate

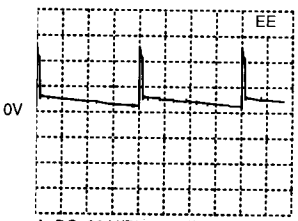

8

A: DC, 20 V/Div, 5ms/Div
IC 7555 Pin 7

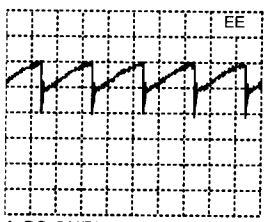

9

A: DC, 5 V/Div, 10ms/Div
IC 7555 Pin 9

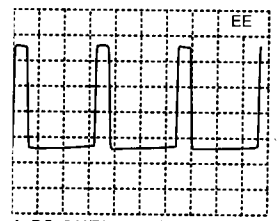

10

A: DC, 2 V/Div, 20us/Div
Resistor 3526

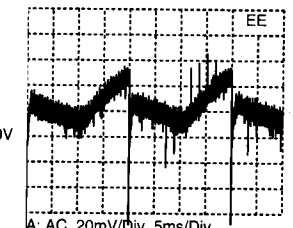

11

A: AC, 20mV/Div, 5ms/Div
Resistor 3555

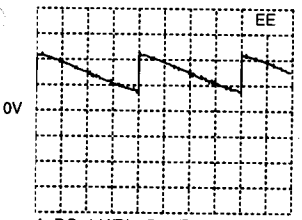

12

A: DC, 1 V/Div, 5ms/Div
Resistor 3556

13

A: DC, 1 V/Div, 5ms/Div
Resistor 3569

14

A: AC, 500mV/Div, 5ms/Div
Conn. 8027 Pin 4 AQUADAG

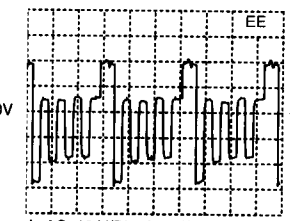

15

A: AC, 10 V/Div, 20us/Div
Transistor 7186 Emitter

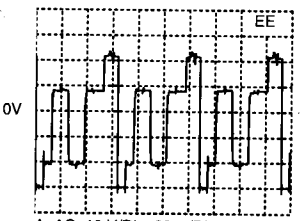

16

A: AC, 10 V/Div, 20us/Div
Transistor 7187 Emitter

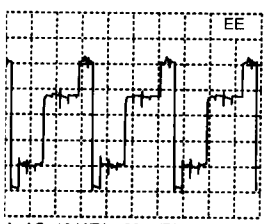

17

A: AC, 10 V/Div, 20us/Div
Transistor 7188 Emitter

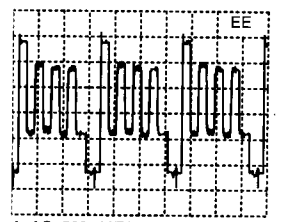

18

A: AC, 500mV/Div, 20us/Div
Conn. 8028 Pin 3 BLUE

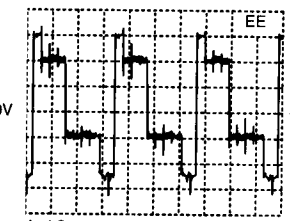

19

A: AC, 500mV/Div, 20us/Div
Conn. 8028 Pin 4 GREEN

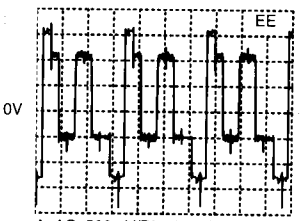

20

A: AC, 500mV/Div, 20us/Div
Conn. 8028 Pin 5 RED

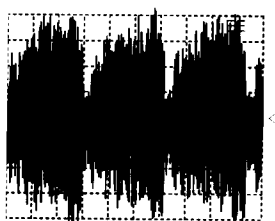

21

A: AC, 50mV/Div, 20us/Div
Tuner 1701 Pin 11

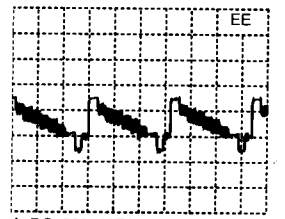

22

A: DC, 500mV/Div, 20us/Div
Transistor 7704 Emitter

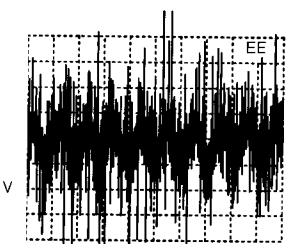

23

A: AC, 50mV/Div, 1ms/Div
IC 7205 Pin 2

24

A: AC, 1 V/Div, 200us/Div
Transistor 7711 Kollektor

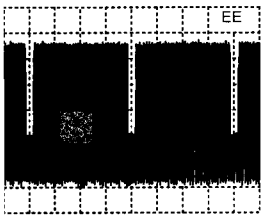

A: DC, 200mV/Div, 5ms/Div
Scart 1978 Pin 20 VideoIn

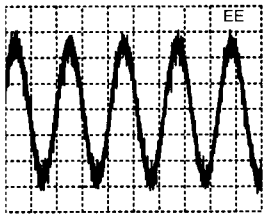

A: AC, 200mV/Div, 500us/Div
Scart 1978 Pin 2 AudInR

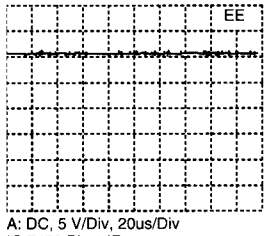

A: DC, 5 V/Div, 20us/Div
IC 7450 Pin 1 IR

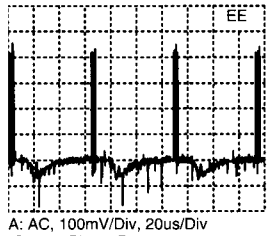

A: AC, 100mV/Div, 20us/Div
IC 7804 Pin 32 B

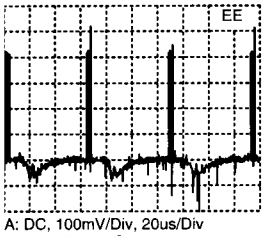

A: DC, 100mV/Div, 20us/Div
IC 7804 Pin 33 G

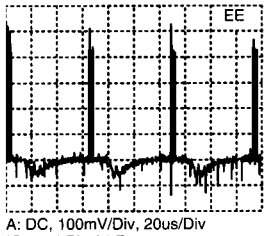

A: DC, 100mV/Div, 20us/Div
IC 7804 Pin 34 R

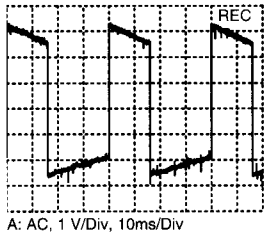

A: AC, 1 V/Div, 10ms/Div
Resistor 3871

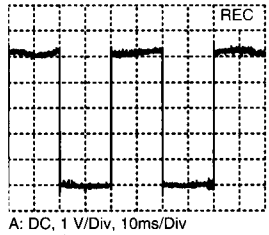

A: DC, 1 V/Div, 10ms/Div
Ic 7900/pin 86

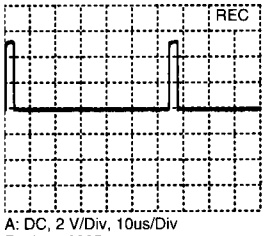

A: DC, 2 V/Div, 10us/Div
Resistor 3885

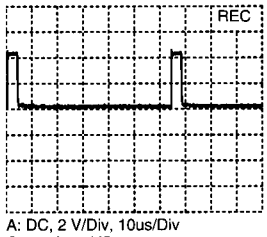

A: DC, 2 V/Div, 10us/Div
Csync from VS

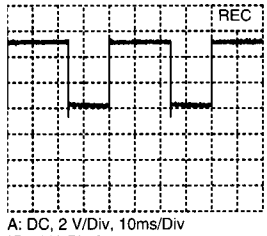

A: DC, 2 V/Div, 10ms/Div
IC 7443 Pin 2

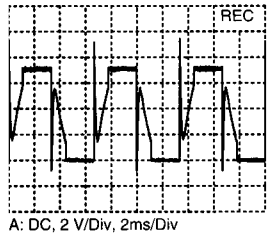

A: DC, 2 V/Div, 2ms/Div
IC 7446 PIN 18

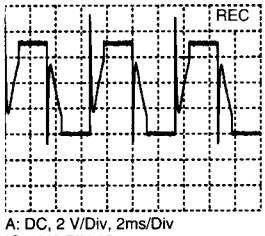

A: DC, 2 V/Div, 2ms/Div
IC 7446 PIN 16

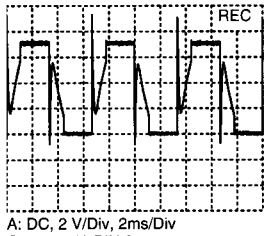

A: DC, 2 V/Div, 2ms/Div
Conn. 1948 PIN 3

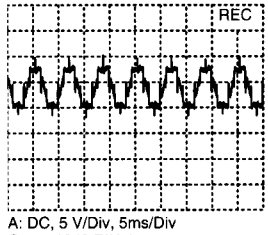

A: DC, 5 V/Div, 5ms/Div
Conn. 1948 PIN 4

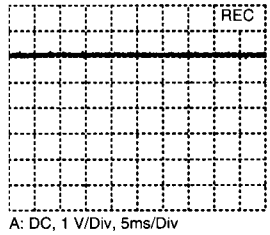

A: DC, 1 V/Div, 5ms/Div
IC 7446 PIN 13

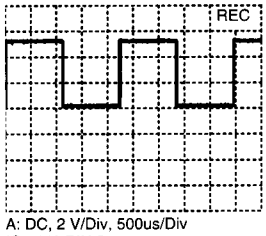

A: DC, 2 V/Div, 500us/Div
IC 7446 PIN 5

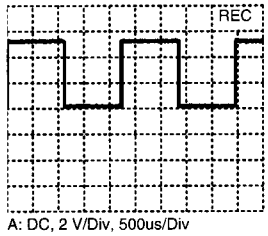

A: DC, 2 V/Div, 500us/Div
Resistor 3476

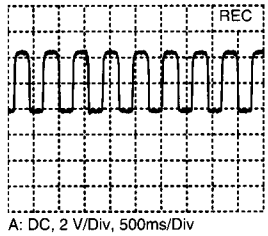

A: DC, 2 V/Div, 500ms/Div
Resistor 3462

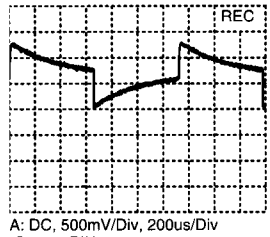

A: DC, 500mV/Div, 200us/Div
IC 7443 PIN 7

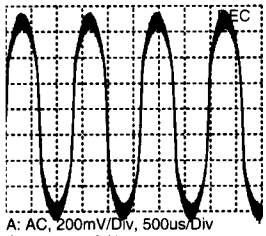

A: AC, 200mV/Div, 500us/Div
Conn. 1946 PIN 4

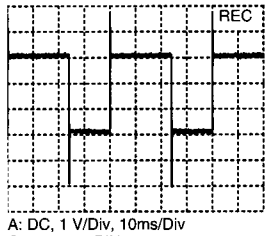

A: DC, 1 V/Div, 10ms/Div
Conn. 1965 PIN 7

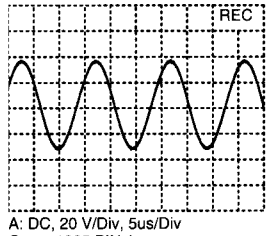

A: DC, 20 V/Div, 5us/Div
Conn. 1965 PIN 1

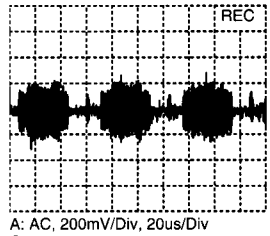

A: AC, 200mV/Div, 20us/Div
C. 2042

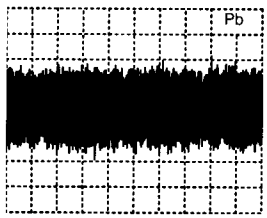

A: AC, 200mV/Div, 20us/Div
C. 2943

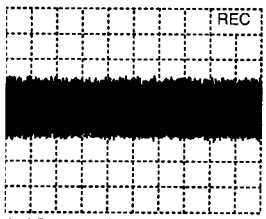

A: AC, 200mV/Div, 20us/Div
IC 7004 Pin 18

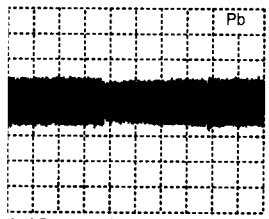

A: AC, 200mV/Div, 5ms/Div
Transistor 7011 Basis

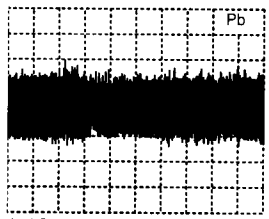

A: AC, 200mV/Div, 5ms/Div
IC 7007 Pin 20

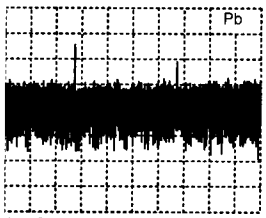

A: AC, 200mV/Div, 5ms/Div
Transistor 7005 Emi.

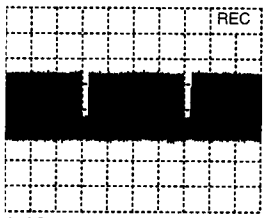

A: AC, 200mV/Div, 5ms/Div
Transistor 7005 Emi.

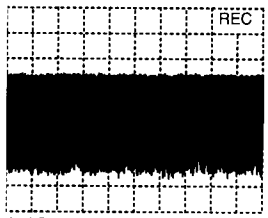

A: AC, 500mV/Div, 10us/Div
IC 7004 Pin 32

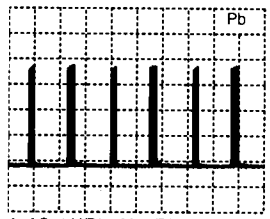

A: AC, 1 V/Div, 20us/Div
IC 7004 Pin 37

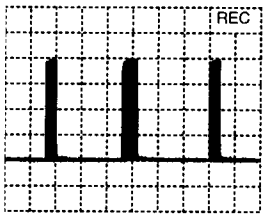

A: AC, 1 V/Div, 10us/Div
IC 7004 PIN 37

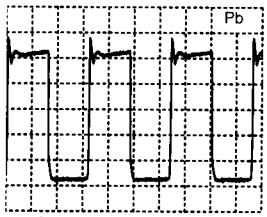

A: AC, 10 V/Div, 20us/Div
Transistor 7501 C

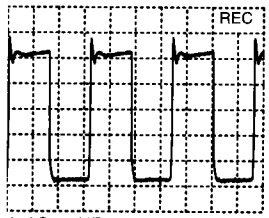

A: AC, 10 V/Div, 20us/Div
Transistor 7501 C

A: AC, 200mV/Div, 10ms/Div
IC 7004 Pin 46

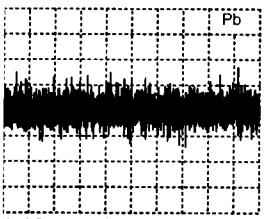

A: AC, 100mV/Div, 500us/Div
IC 7004 Pin 50/48

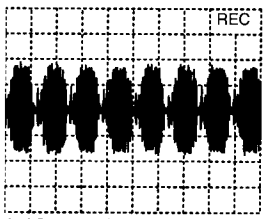

A: AC, 100mV/Div, 50us/Div
IC 7004 Pin 50/48

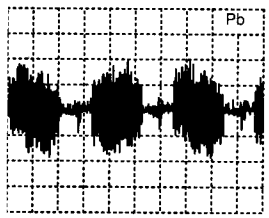

A: AC, 100mV/Div, 20us/Div
IC 7004 Pin 52

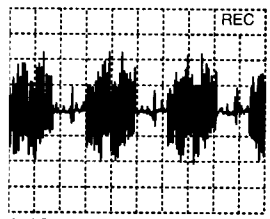

A: AC, 100mV/Div, 20us/Div
IC 7004 Pin 52

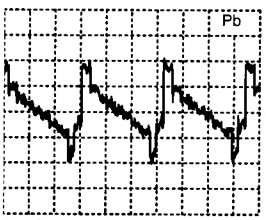

A: AC, 100mV/Div, 20us/Div
IC 7002 Pin 5

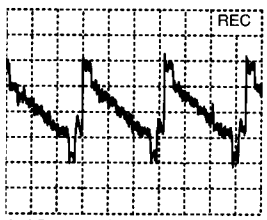

A: AC, 100mV/Div, 20us/Div
IC 7002 Pin 5

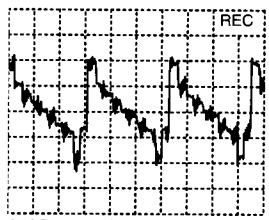

A: AC, 100mV/Div, 20us/Div
IC 7004 Pin 40

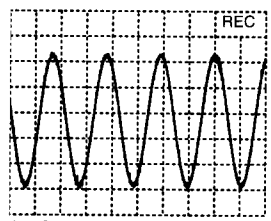

A: AC, 200mV/Div, 500us/Div
Resistor 3643

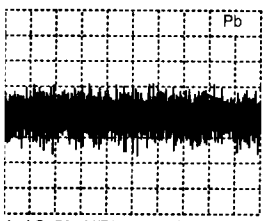

A: AC, 50mV/Div, 200us/Div
C. 2611

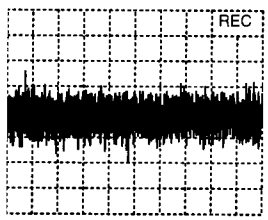

A: AC, 50mV/Div, 200us/Div
C. 2611

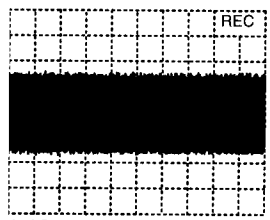

A: AC, 200mV/Div, 100us/Div
IC 7072 Pin 2

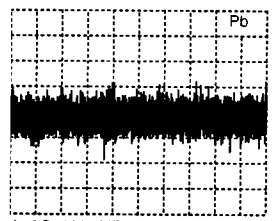

A: AC, 100mV/Div, 100us/Div
IC 7072 Pin 13

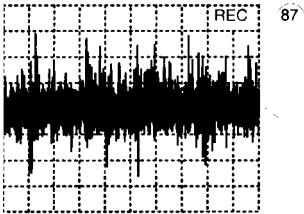

A: AC, 50mV/Div, 2us/Div
Resistor 3078

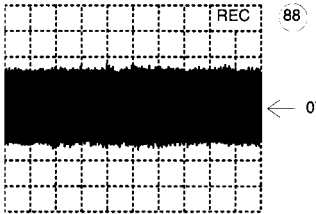

A: AC, 1 V/Div, 2us/Div
IC 7104 Pin 1

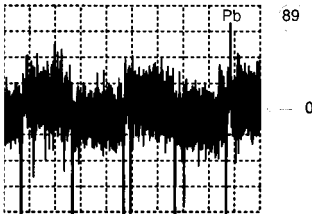

A: AC, 200mV/Div, 10ms/Div
IC 7104 PIN14

V. EXPLODED VIEWS

1. DECK EXPLODED VIEW (TOP)

5322 390 10096 Oil
4822 390 20154 Grease
Cleaning set:
4822 390 80166 Isopropanol
4822 466 91591 Cleaning cloth

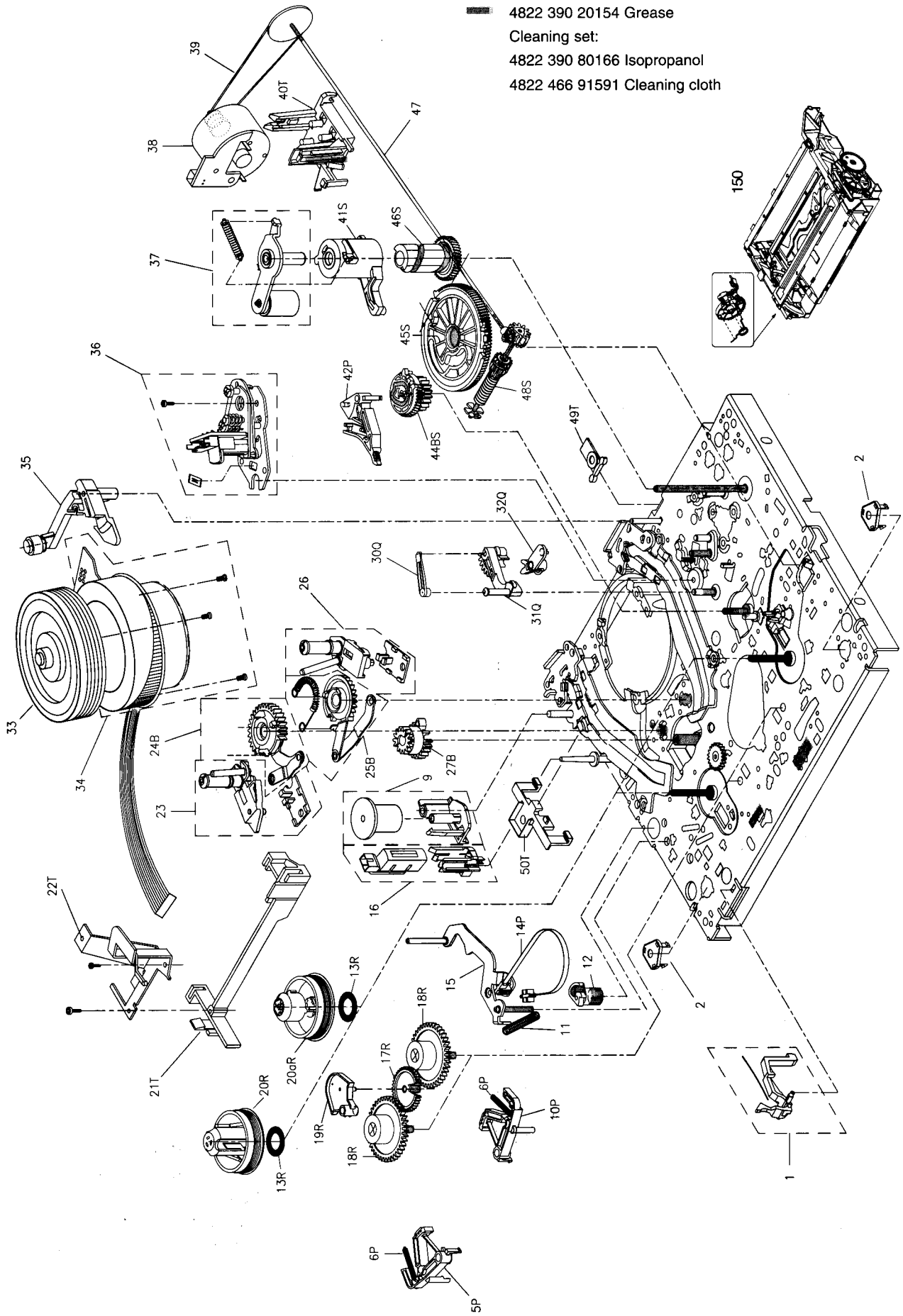

2. DECK EXPLODED VIEW (BOTTOM)

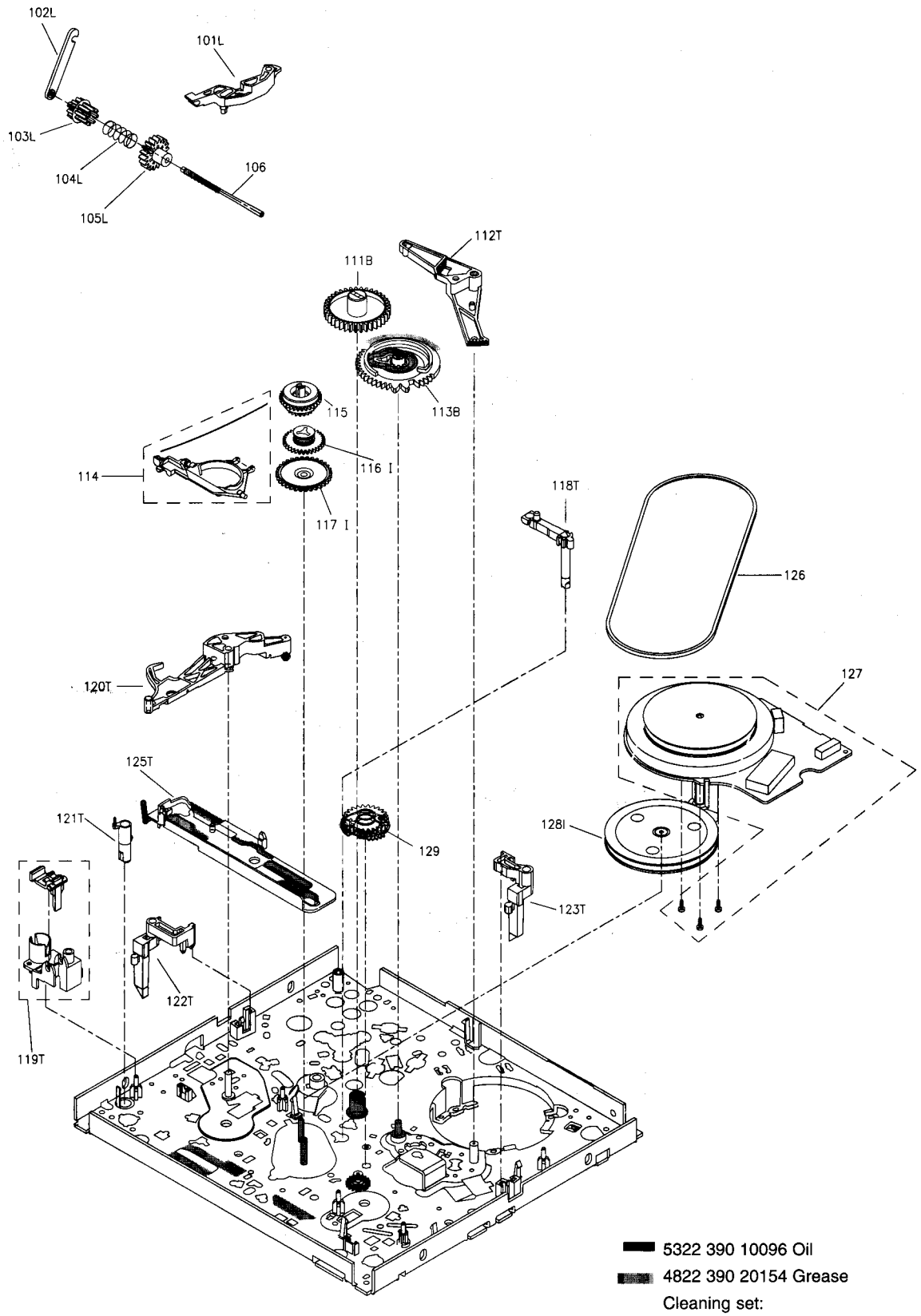

5322 390 10096 Oil
4822 390 20154 Grease
Cleaning set:
4822 390 80166 Isopropanol
4822 466 91591 Cleaning cloth

3. MECHANICAL PARTS LIST

Pos.	Description	KITS								Code number 4822
		B	I	L	P	Q	R	S	T	
1	Rec. protection lever (with spring)									402 10202
2	Chassis mounting spring (2x)									492 71022
5	Main brake left				P					
6	Main brake spring (2x)				P					
9	Damping roller *)									528 70782
10	Main brake right				P					
11	Tension arm spring									492 33317
12	Tension crank									403 70551
13	Slip ring						R			
14	Tension band				P					
15	Tension arm									403 70547
16	Erase head									249 10522
17	Swivelling gear						R			
18	Brake gear (2x)						R			
19	Swivelling plate						R			
20	Reel table (S)						R			
20a	Reel table (T)						R			
21	Headamplifier holder								T	
22	Bracket								T	
23	Roller unit left									528 70771
24	Loading arm left	B								
25	Loading arm right	B								
26	Roller unit right									528 70772
27	Loading gear	B								
30	Reverse clip					Q				
31	Reverse lever					Q				
32	Intermediate lever					Q				
33	Head disc 2/0									691 10583
33	Head disc 2/0-LP									691 10585
34	Scanner motor 2/0 (with screws)									361 10963
34	Scanner assy. 4/0 (Head disc and motor)									218 12031
34	Scanner assy. 4/2 (Head disc and motor)									218 12032
35	Cleaning roller									528 70773
36	A/C Head (with clip and screws)									249 10468
37	Pressure roller (with spring)									528 70774
38	Threading motor									361 10809
39	Threading belt									358 20421
40	Motor holder								T	
41	Pressure roller guide							S		
42	Reverse brake				P					
44	Slider gear	B						S		
45	Cam wheel							S		
46	Cam shaft							S		
47	Pulley shaft									528 81462
48	Worm shaft							S		
49	Chassis mounting clip								T	
50	WD-holder								T	

Pos.	Description	KITS								Code number 4822
		B	I	L	P	Q	R	S	T	
101	Cassette loader trigger			L						
102	Clip			L						
103	Cassette loader gear1			L						
104	Cassette loader spring			L						
105	Cassette loader gear2			L						
106	Spindle									535 93277
111	Cam wheel reverse	B								
112	Tension lever								T	
113	Cam wheel tension	B								
114	Clutch lever (with spring)									403 70549
115	Clutch									528 20736
116	Changing gear		I							
117	Double gear		I							
118	Light prism								T	
119	Init flap and holder								T	
120	Cam wheel lever								T	
121	S-VHS lever								T	
122	Prism rihgt								T	
123	Prism left								T	
125	Main slider								T	
126	Driving belt									358 31166
127	Capstan motor (with screws)									361 10805
129	Reverse kicker with transmission gears *)									522 20451
128	Gear pulley		I							
150	Lift									443 64112
KIT	B									310 31955
KIT	I									310 31963
KIT	L									310 32116
KIT	P									310 32191
KIT	Q									310 10658
KIT	R									310 10659
KIT	S									310 10661
KIT	T									310 10662

*) optional

Um eine hohen Reparaturstandard zu gewährleisten sind mit Ausnahme von Kit T immer alle im Kit enthaltenen Teile zu tauschen.

In order to guarantee a high repairstandard all spare parts included in a kit have to be replaced with the exception of kit T.

Per una riparazione garantita ocorre sostituire tutti i pezzi contenuti nei kit, fatta eccetione per il kit T.

Para obtener un estandár de reparaciones elevado,es necesario cambiar todas las partes contenidas en el kit, la única exceptión es para el kit T.

A fin d'obtenir un standard de réparations élevé, toutes les pièces de rechange incluses dans un kit sont à remplacer, exception faite du kit T.

Om een hoge reparatiekwaliteit te waarbogen moeten, met uitzondering van kit T, altijd alle zich in een kit bevindende onderdelen worden vervangen.

CHASSIS EXPLODED VIEW 14"

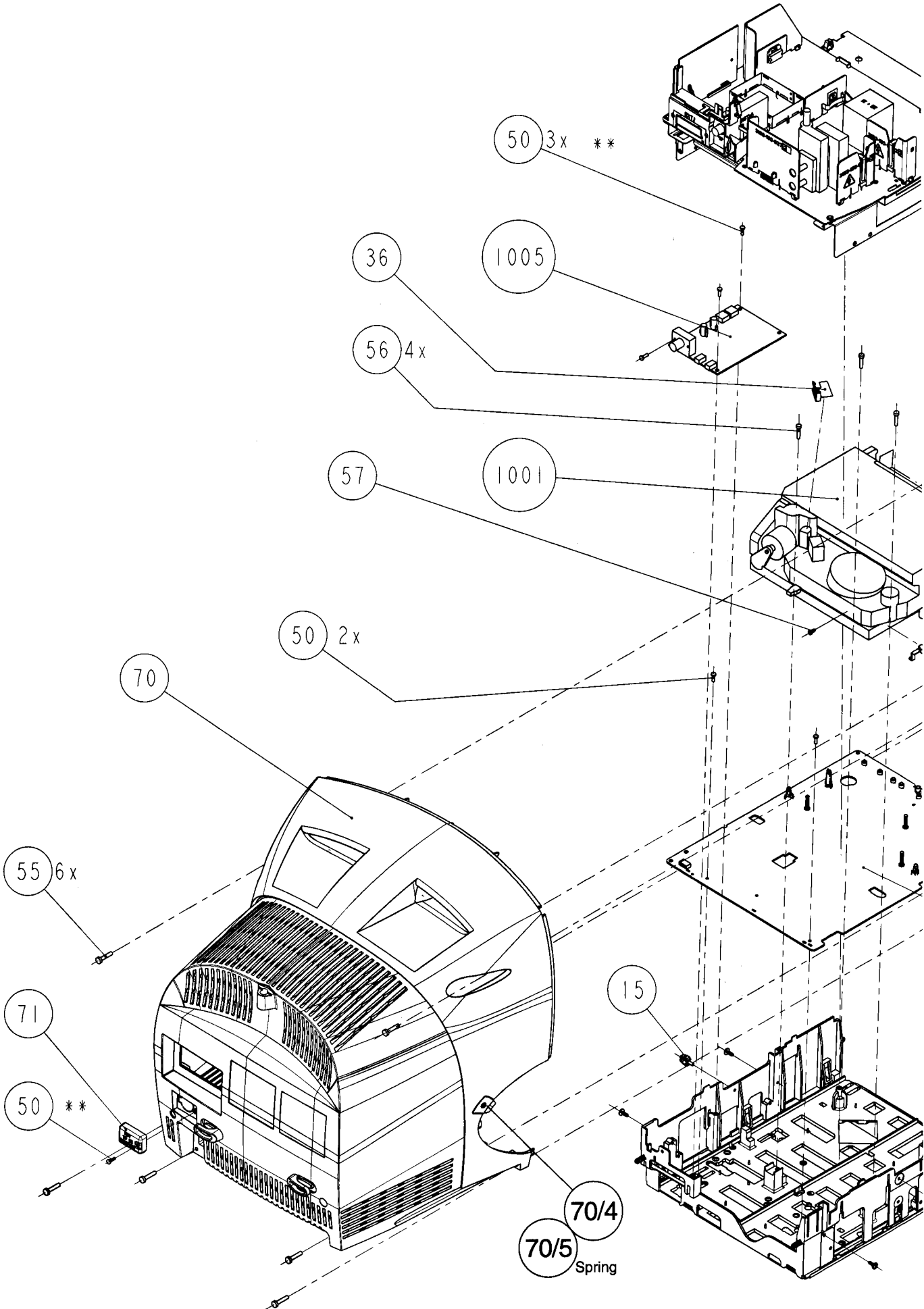

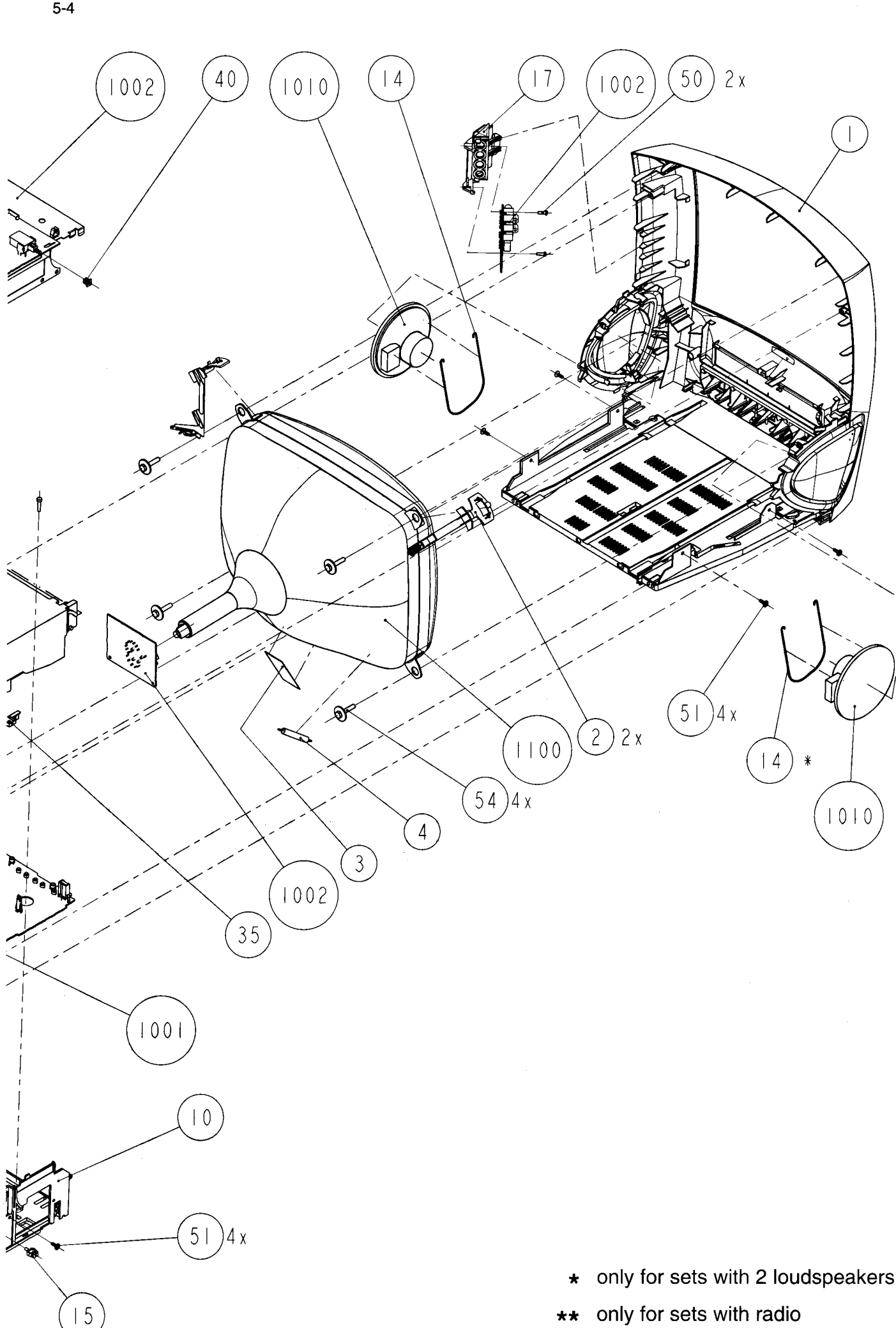

* only for sets with 2 loudspeakers

** only for sets with radio

CHASSIS EXPLODED VIEW 20-25"

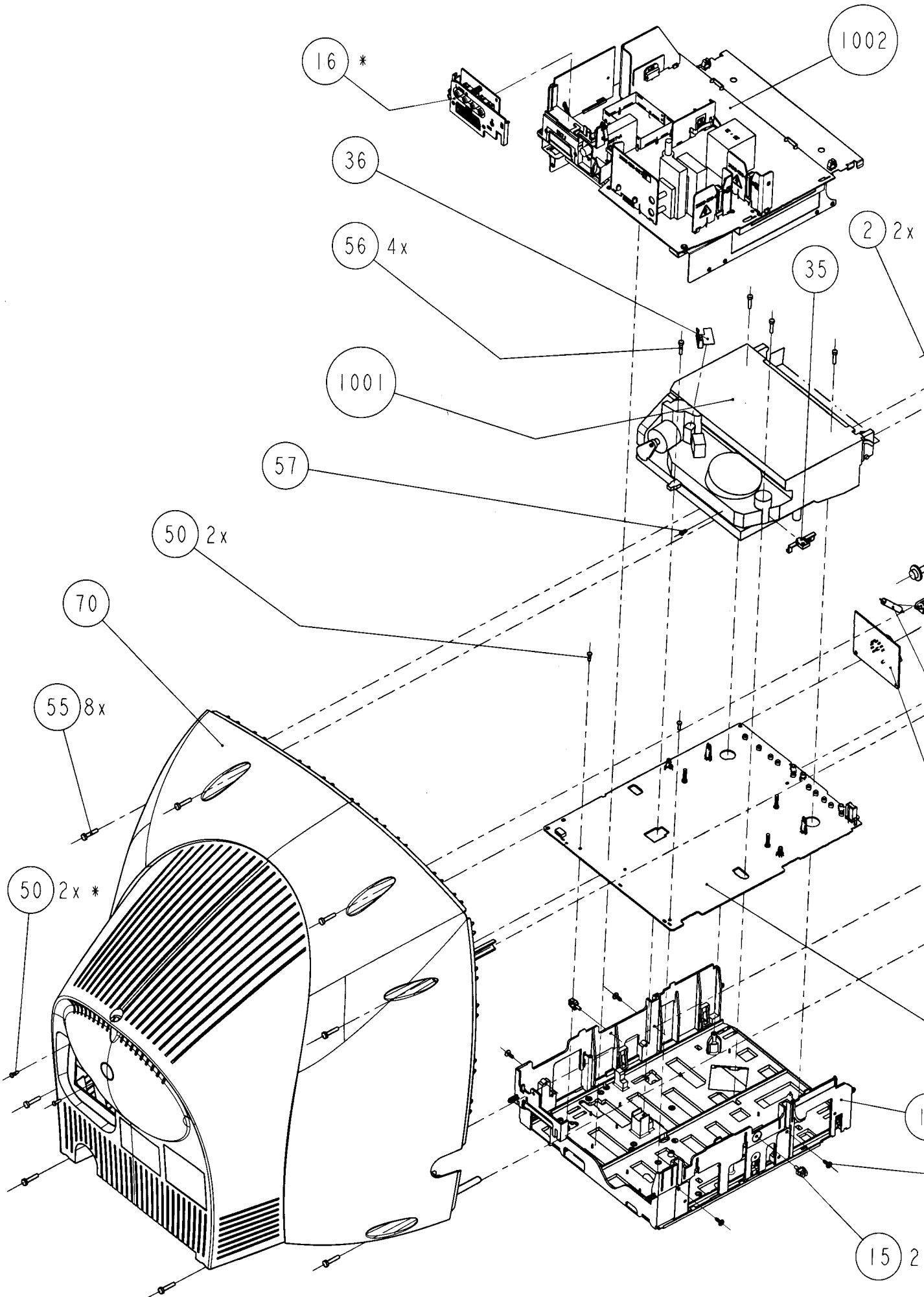

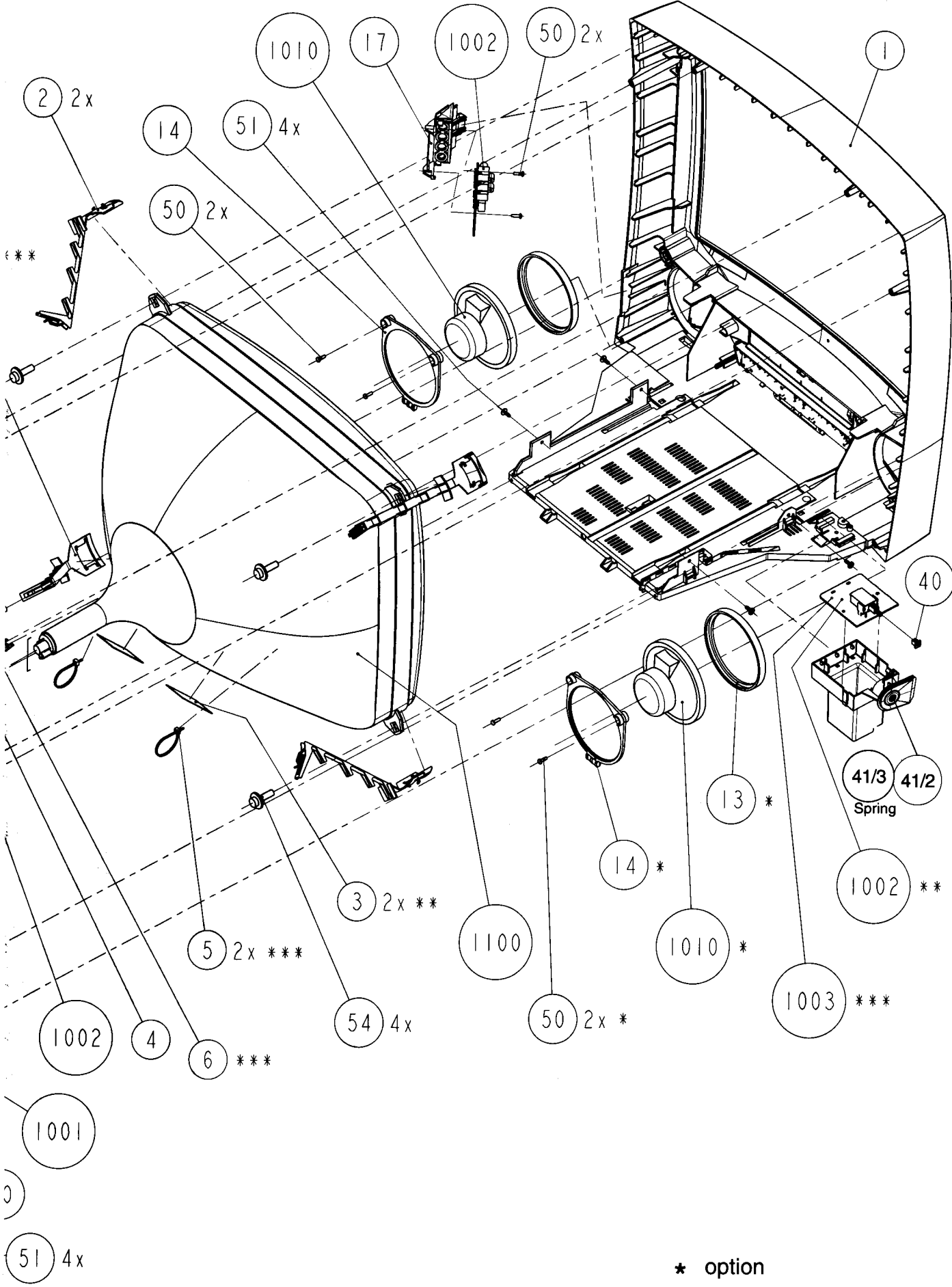

* option

** only for 20" and 21 sets

*** only for 25" sets

FRONT EXPLODED VIEW 14" (for sets without key board)

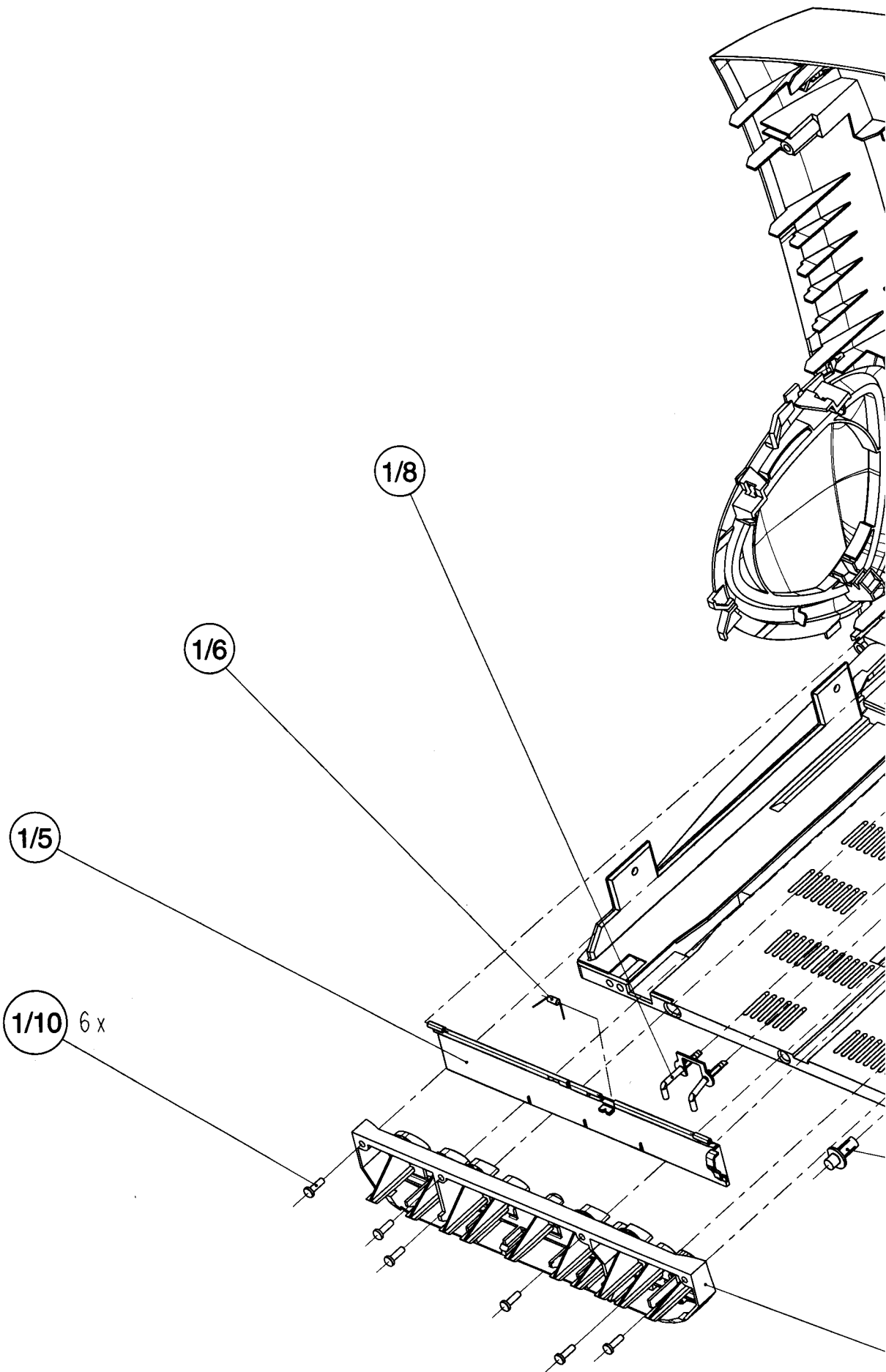

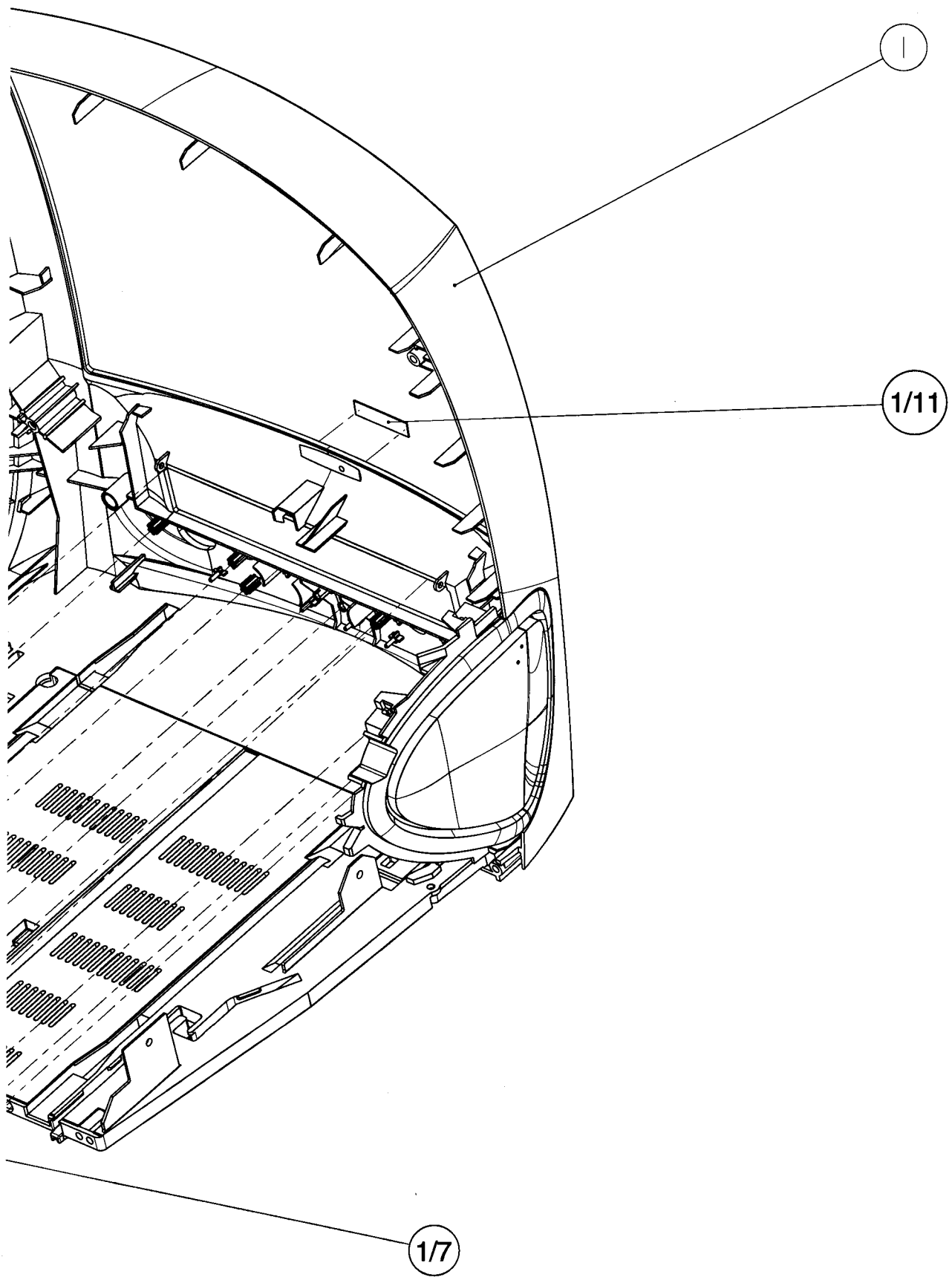
1
1/11
1/7
1/9

FRONT EXPLODED VIEW 14" (for sets with key board)

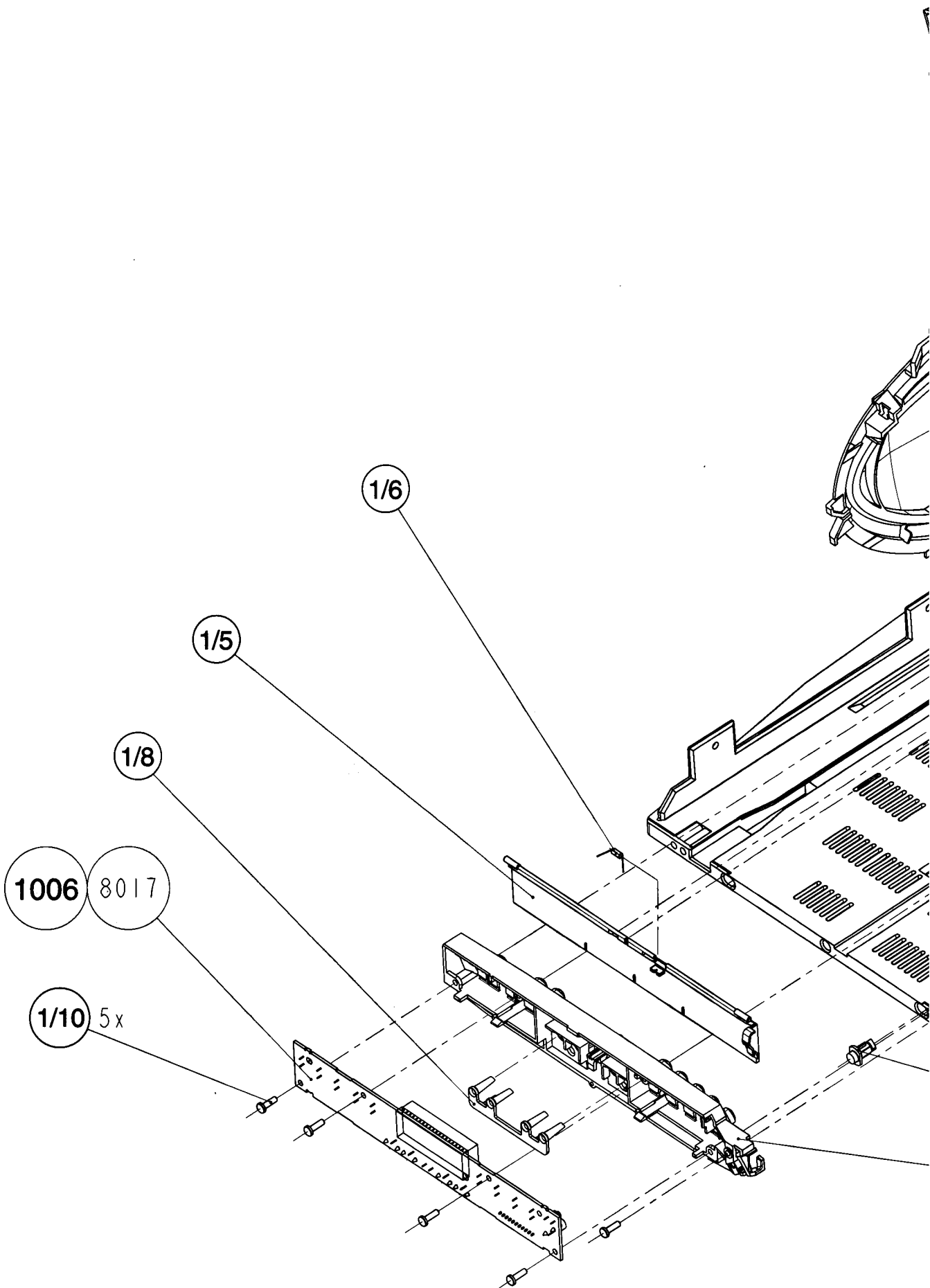

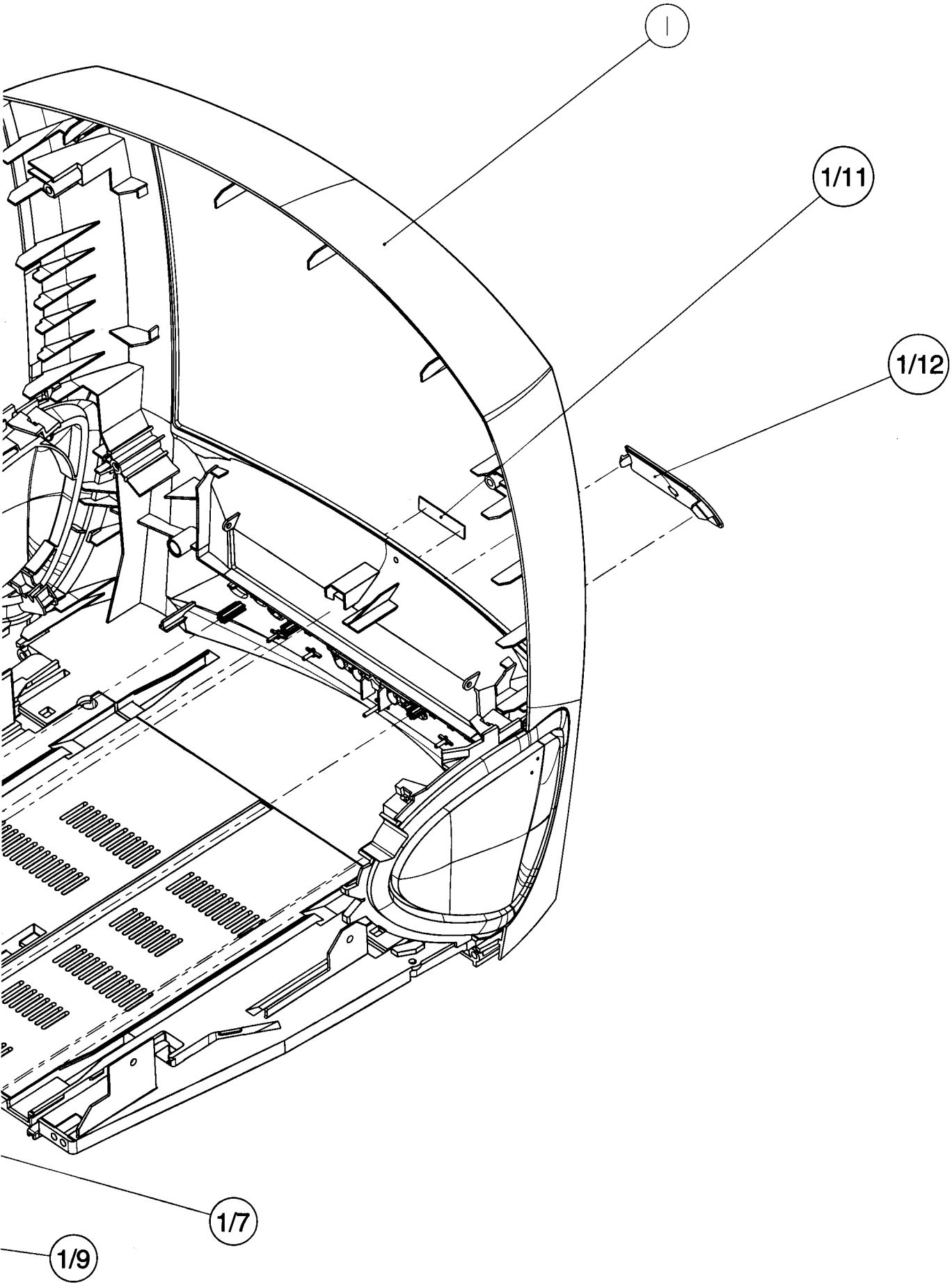
1
1/11
1/12
1/7
1/9

FRONT EXPLODED VIEW 20",21",25"

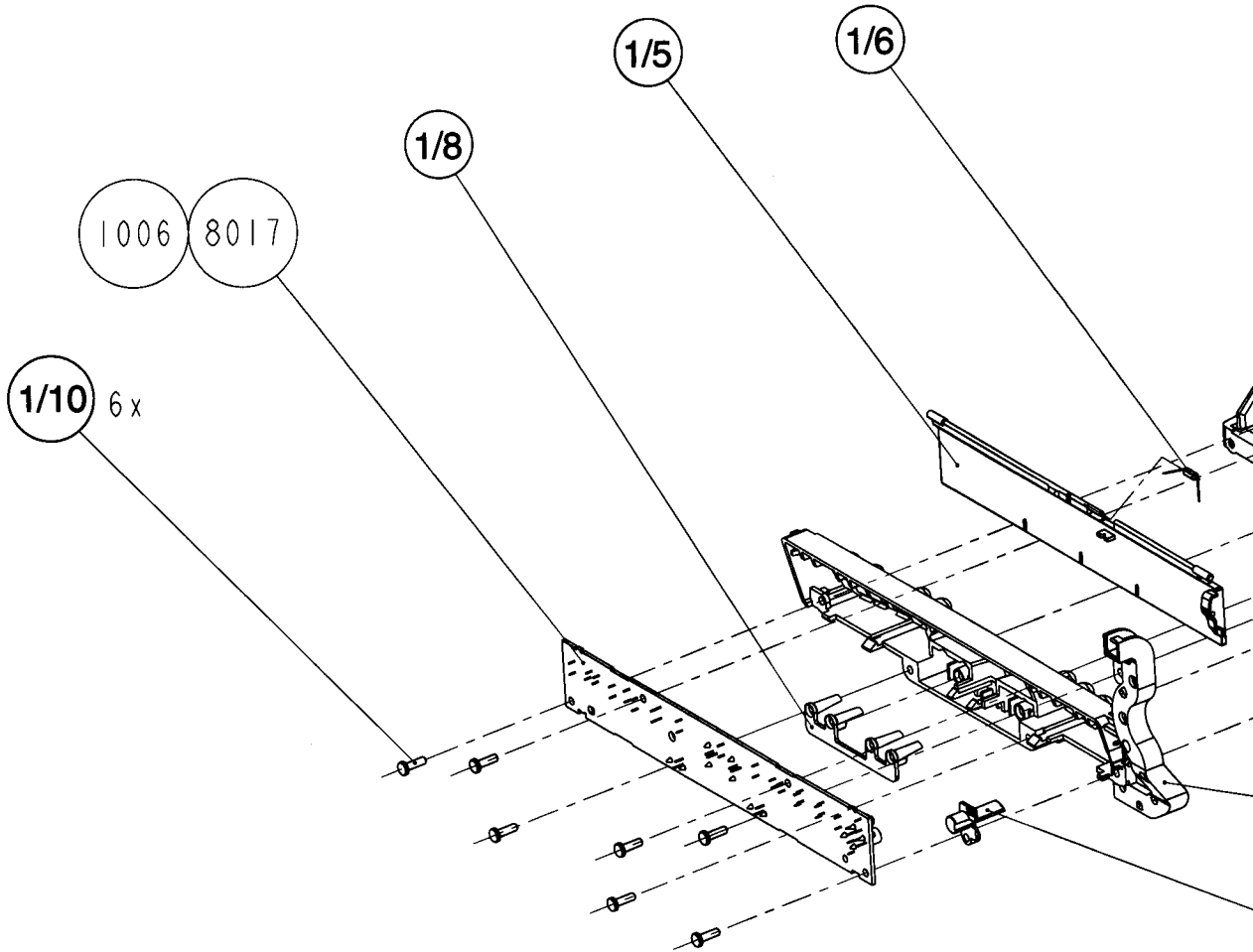

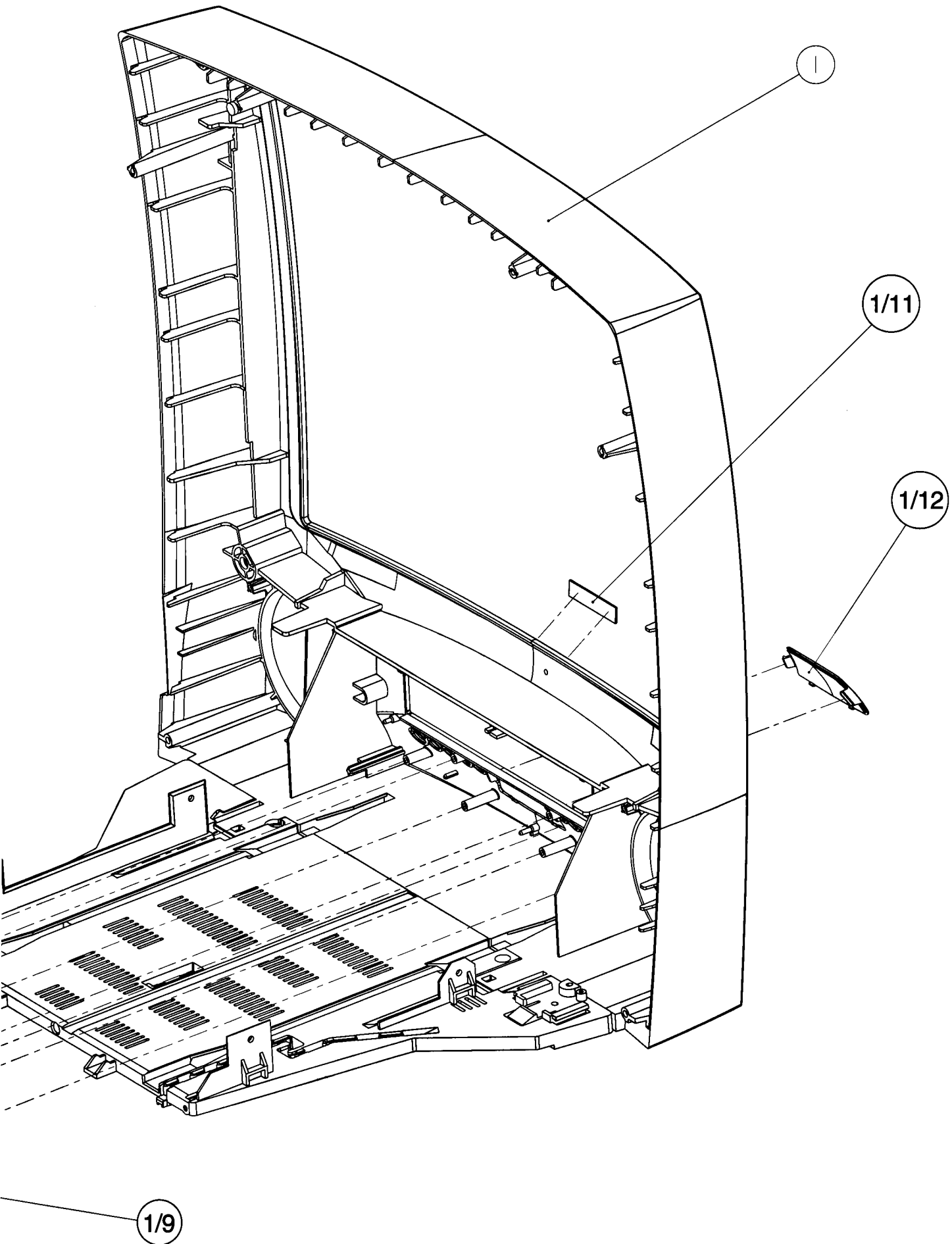
1
1/11
1/12
1/9

SET PARTS LIST

Pos	⚠	Service Code	Description	14PV210/01	14PV210/07	14PV210/39	14PV210/58	14PV210/75	14PV210/75S	14PV320/01	14PV320/05	14PV320/39	14PV325/05S
			FRAME AND CABINET PARTS										
1		310315093640	CABINET ASSY										
1		310315093250	CABINET ASSY								1		
1		310315093550	CABINET ASSY										
1		310315093600	CABINET ASSY										
1		310315092890	CABINET ASSY		1								
1		310315093380	CABINET ASSY										
1		310315093700	CABINET ASSY										
1		310315093260	CABINET ASSY									1	
1		310315093270	CABINET ASSY										
1		310315093280	CABINET ASSY										
1		310315092900	CABINET ASSY							1			
1		310315093560	CABINET ASSY										
1		310315093740	CABINET ASSY										
1		310315092870	CABINET ASSY	1									
1		310315093980	CABINET ASSY BLUE										
1		310315093400	CABINET ASSY SILVER										1
1		310315092800	CABINET ASSY			1							
1		310315092880	CABINET ASSY				1						
1		310315093990	CABINET ASSY BLUE										
1		310315093360	CABINET ASSY										
1		310315093570	CABINET ASSY										
1		310315093690	CABINET ASSY										
1		310315093370	CABINET ASSY										
1		310315093720	CABINET ASSY										
1		310315093710	CABINET ASSY										
1		310315093410	CABINET ASSY SILVER										
1		310315092910	CABINET ASSY										
1		310315093580	CABINET ASSY										
1		310315093880	CABINET ASSY SILVER										
1		310315093590	CABINET ASSY										
1		310315093870	CABINET ASSY SILVER										
1		310315093750	CABINET ASSY										
1		310315093620	CABINET ASSY					1					
1		310315093630	CABINET ASSY						1				
1/5		310315032330	LIFT FLAP		1					1			
1/5		310315032570	LIFT FLAP										
1/5		310315032430	LIFT FLAP							1			
1/5		310315032320	LIFT FLAP				1					1	
1/5		310315032680	LIFT FLAP										
1/5		310315032380	LIFT FLAP			1							
1/5		310315032700	LIFT FLAP										
1/5		310315032580	LIFT FLAP										
1/5		310315032840	LIFT FLAP BLUE										
1/5		310315032590	LIFT FLAP										
1/5		310315032440	LIFT FLAP									1	
1/5		310315032690	LIFT FLAP										
1/5		310315032820	LIFT FLAP BLUE										
1/5		310315032650	LIFT FLAP SILVER										
1/5		310315032300	LIFT FLAP	1					1				
1/5		310315032670	LIFT FLAP										
1/5		310315032640	LIFT FLAP SILVER										1
1/5		310315032760	LIFT FLAP					1	1				
1/6		482249270896	LIFT FLAP SPRING	1	1	1	1	1	1	1	1	1	1
1/9		310315032390	KEY-SET ASSY	1	1	1	1						
1/9		310315032370	KEY-SET ASSY					1	1	1	1	1	
1/9		310315032600	KEY-SET ASSY										
1/9		310315032780	KEY-SET ASSY SILVER										
1/9		310315032770	KEY-SET ASSY										

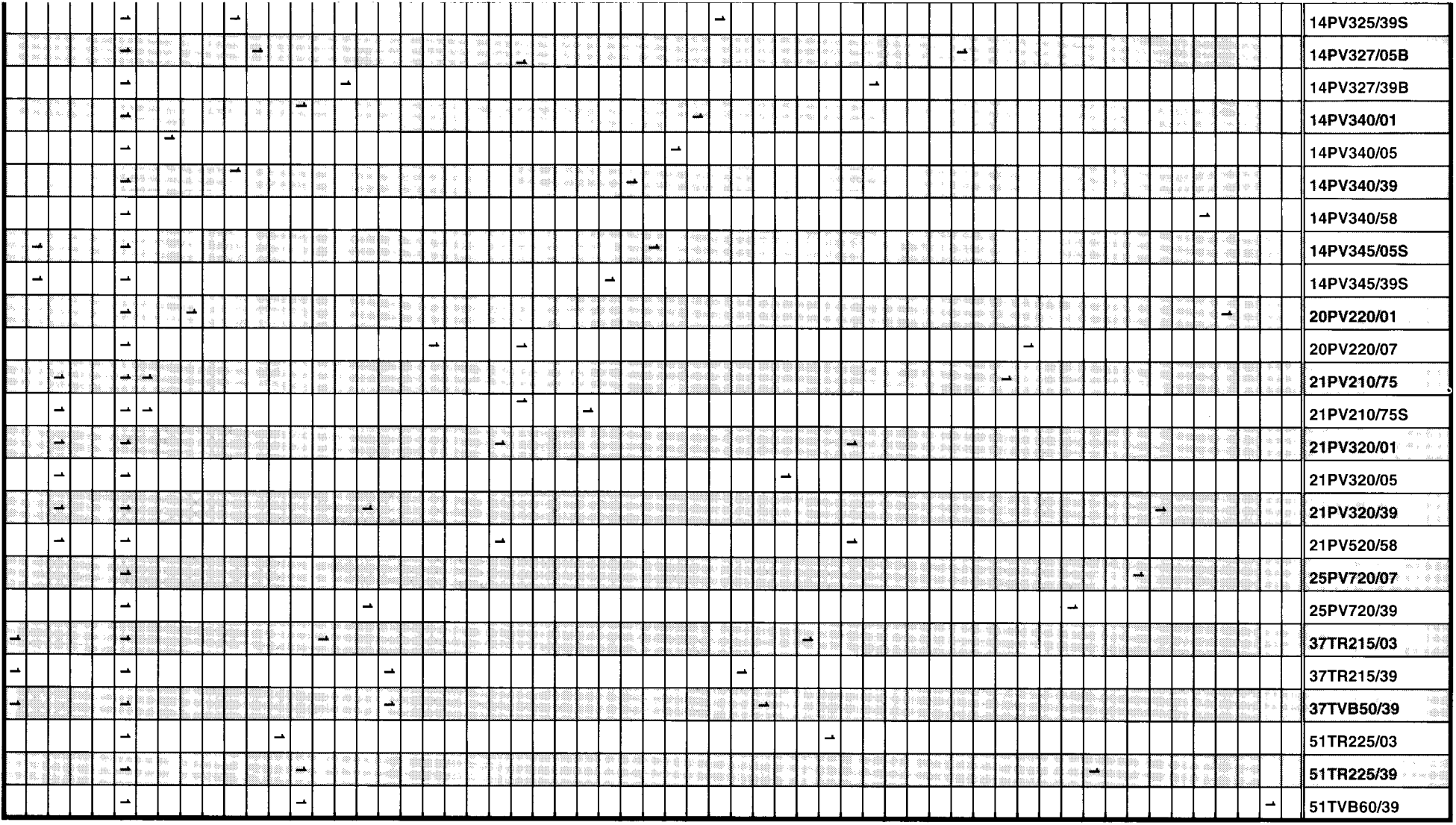
14PV325/39S
14PV327/05B
14PV327/39B
14PV340/01
14PV340/05
14PV340/39
14PV340/58
14PV345/05S
14PV345/39S
20PV220/01
20PV220/07
21PV210/75
21PV210/75S
21PV320/01
21PV320/05
21PV320/39
21PV520/58
25PV720/07
25PV720/39
37TR215/03
37TR215/39
37TVB50/39
51TR225/03
51TR225/39
51TVB60/39

Pos	⚠	Service Code	Description	14PV210/01	14PV210/07	14PV210/39	14PV210/58	14PV210/75	14PV210/75S	14PV320/01	14PV320/05	14PV320/39
1/9		310315032360	KEY-SET ASSY									
1/9		310315032620	KEY-SET ASSY									
1/9		310315032480	KEY-SET ASSY									
1/9		310315032490	KEY-SET ASSY									
1/11		310311001360	WORDMARK PHILIPS									
1/11		310311001370	WORDMARK PHILIPS	1	1	1	1	1	1	1	1	1
1/11		312222000510	WORDMARK ARISTONA									
1/11		312222000520	WORDMARK ARISTONA									
1/11		482245910982	WORDMARK RADIOLA (35MM)									
1/11		312222000240	WORDMARK RADIOLA (47MM)									
1/11		482245910983	WORDMARK SCHNEIDER (35MM)									
1/11		312222000270	WORDMARK SCHNEIDER (47MM)									
1/12		310315032560	WINDOW ASSY									
1/12		310315032830	WINDOW ASSY									
1/12		310315032420	WINDOW ASSY							1	1	1
1/12		310315032720	WINDOW ASSY									
1/12		310315032450	WINDOW ASSY									
1/12		310315032740	WINDOW ASSY					1				
1/12		310315032750	WINDOW ASSY						1			
2	⚠	482240210174	BRACKET 14"	2	2	2	2	2	2	2	2	2
2	⚠	482240210159	BRACKET 20,21,25"									
4		482249211069	SPRING	1	1	1	1	1	1	1	1	1
40		482240210196	EXTENSION	1	1	1	1	1	1	1	1	1
41/2		310315011050	ON/OFF KNOB 20,21,25"									
41/3		482249232656	COMPRESSION SPRING									
70		310315093240	BACK-COVER ASSY									
70		310315093670	BACK-COVER ASSY									
70		310315093860	BACK-COVER ASSY									
70		310315093220	BACK-COVER ASSY									
70		310315092840	BACK-COVER ASSY	1	1	1	1	1	1	1	1	1
70		310315094000	BACK-COVER ASSY									
70		310315093310	BACK-COVER ASSY									
70/4		310315012030	ON/OFF KNOB 14"	1	1	1	1	1	1	1	1	1
70/4		310315012530	ON/OFF KNOB 14" SILVER									
70/4		310315032790	ON/OFF KNOB 14" BLUE									
70/5		482249232656	COMPRESSION SPRING	1	1	1	1	1	1	1	1	1
54		482250221546	CRT SCREW 14"	4	4	4	4	4	4	4	4	4
54		482250214061	CRT SCREW 20,21"									
54		482250214071	CRT SCREW 25"									
55		482250214062	CABINET SCREW	6	6	6	6	6	6	6	6	6
71		310315012070	COVER (RADIO)									
1010		482224030716	LOUDSPEAKER 8R 3W	1	1	1	1	1	1	1	1	1
1010		244126400271	LOUDSPEAKER 8R 6W									
			REMOTE CONTROLS									
150/3		862266790101	REMOTE CONTROL RT790/101	1	1	1	1	1	1	1	1	1
150/3		862266790201	REMOTE CONTROL RT790/201									
150/3		862266791101	REMOTE CONTROL RT791/101 (silver)									
150/3		862266795101	REMOTE CONTROL RT795/101									
150/3		862266796101	REMOTE CONTROL RT796/101									
150/3		862266797101	REMOTE CONTROL RT797/101 (silver)									
			DIRECTION FOR USE									
150/15		310316622840	14PV210/01 DA, FI, NO, SV	1								
150/11		310316622830	14PV210/01 DE	1								
150/17		310316622860	14PV210/01 DE, FR, NL, IT	1								
150/18		310316622870	14PV210/01 EL	1								
150/16		310316622850	14PV210/01 IT, PT, ES	1								
150/11		310316622780	14PV210/07 EN		1							
150/11		310316622770	14PV210/39 FR			1						
150/11		310316623170	14PV210/58 EN, PL, RU, SK, CS, HU				1					

14PV325/05S	14PV325/39S	14PV327/05B	14PV327/39B	14PV340/01	14PV340/05	14PV340/39	14PV340/58	14PV345/05S	14PV345/39S	20PV220/01	20PV220/07	21PV210/75	21PV210/75S	21PV320/01	21PV320/05	21PV320/39	21PV520/58	25PV720/07	25PV720/39	37TR215/03	37TR215/39	37TVB50/39	51TR225/03	51TR225/39	51TVB60/39
				1	1	1	1																		
1	1	1	1																						
										1	1												1	1	1
																		1	1						
										1	1	1	1	1	1	1	1	1	1						
1	1	1	1	1	1	1	1	1	1																
																							1		
																				1					
																					1				
																						1			
																								1	
														1	1	1	1								
		1	1																						
1	1																								
				1	1	1	1	1	1																
																		1	1						
												1													
													1												
2	2	2	2	2	2	2	2	2	2											2	2	2			
										2	2	2	2	2	2	2	2	4	4				2	2	2
1	1	1	1	1	1	1	1	1	1	1	1	1	1	1	1	1	1	1	1	1	1	1	1	1	1
1	1	1	1	1	1	1	1	1	1	1	1	1	1	1	1	1	1	1	1	1	1	1	1	1	1
										1	1	1	1	1	1	1	1	1	1				1	1	1
										1	1	1	1	1	1	1	1	1	1				1	1	1
1	1							1	1																
				1	1	1	1																		
												1	1												
										1	1			1	1	1	1						1	1	1
																				1	1	1			
		1	1																						
				1	1	1	1											1	1						
																				1	1	1			
1	1							1	1																
		1	1																						
1	1	1	1	1	1	1	1	1	1											1	1	1			
4	4	4	4	4	4	4	4	4	4											4	4	4			
										4	4	4	4	4	4	4	4						4	4	4
																		4	4						
6	6	6	6	6	6	6	6	6	6	8	8	8	8	8	8	8	8	8	8	6	6	6	8	8	8
				1	1	1	1	1	1																
1	1	1	1	1	1	1	1	1	1	1	1									1	1	1	1	1	1
												1	1	1	1	1	1	2	2						
										1	1														
																				1	1	1	1	1	1
1	1	1	1									1	1	1	1	1	1	1	1						
				1	1	1	1																		
								1	1																

Pos	⚠	Service Code	Description	14PV210/01	14PV210/07	14PV210/39	14PV210/58	14PV210/75	14PV210/75S	14PV320/01	14PV320/05
150/11		310316624030	14PV210/75 EN, FR, ES					1			
150/11		310316624080	14PV210/75S EN, FR, ES						1		
150/11		310316623510	14PV320/01 DE							1	
150/17		310316623540	14PV320/01 DE, FR, NL, IT							1	
150/18		310316623550	14PV320/01 EL							1	
150/16		310316623530	14PV320/01 IT, PT, ES							1	
150/15		310316623520	14PV320/01DA, FI, NO, SV							1	
150/11		310316623500	14PV320/05 EN								1
150/11		310316623610	14PV320/05B EN								
150/11		310316623620	14PV320/05S EN								
150/11		310316623560	14PV320/39 FR								
150/15		310316623640	14PV320/39B DA, FI, NO, SV								
150/11		310316623630	14PV320/39B DE								
150/17		310316623660	14PV320/39B DE, FR, NL, IT								
150/18		310316623670	14PV320/39B FR								
150/16		310316623650	14PV320/39B IT, PT, ES								
150/15		310316623690	14PV320/39S DA, FI, NO, SV								
150/11		310316623680	14PV320/39S DE								
150/17		310316623710	14PV320/39S DE, FR, NL, IT								
150/18		310316623720	14PV320/39S FR								
150/16		310316623700	14PV320/39S IT, SK, ES								
150/15		310316623980	14PV340/01 DA, FI, NO, SV								
150/11		310316623970	14PV340/01 DE								
150/17		310316624000	14PV340/01 DE, FR, NL, IT								
150/18		310316624010	14PV340/01 EL								
150/16		310316623990	14PV340/01 IT, PT, ES								
150/11		310316623920	14PV340/05 EN								
150/11		310316624110	14PV340/05S EN								
150/11		310316623910	14PV340/39 FR								
150/15		310316624130	14PV340/39S DA, FI, NO, SV								
150/11		310316624120	14PV340/39S DE								
150/17		310316624150	14PV340/39S DE, FR, NL, IT								
150/18		310316624160	14PV340/39S FR								
150/16		310316624140	14PV340/39S IT, PT, ES								
150/11		310316624020	14PV340/58 EN, PL, SK, CS, HU								
150/15		310316623810	20PV220/01 DA, FI, NO, SV								
150/11		310316623800	20PV220/01 DE								
150/17		310316623830	20PV220/01 DE, FR, NL, IT								
150/18		310316623840	20PV220/01 EL								
150/16		310316623820	20PV220/01 IT, PT, ES								
150/11		310316623870	20PV220/07 EN								
150/11		310316624040	21PV210/75 EN, FR, ES								
150/11		310316624090	21PV210/75S EN, FR, ES								
150/15		310316623460	21PV320/01 DA, FI, NO, SV								
150/11		310316623450	21PV320/01 DE								
150/17		310316623480	21PV320/01 DE, FR, NL, IT								
150/18		310316623490	21PV320/01 EL								
150/16		310316623470	21PV320/01 IT, PT, ES								
150/11		310316623570	21PV320/05 EN								
150/11		310316623580	21PV320/39 FR								
150/11		310316623900	21PV520/58 EN, PL, RU, SK, CS, HU								
150/11		310316624100	25PV720/07 EN								
150/15		310316624180	25PV720/39 DA, FI, NO, SV								
150/11		310316624170	25PV720/39 DE								
150/17		310316624200	25PV720/39 DE, FR, NL, IT								
150/18		310316624210	25PV720/39 FR								
150/16		310316624190	25PV720/39 IT, PT, ES								
150/11		310316624070	37TR215/03 NL								
150/11		310316624060	37TR215/39 FR								

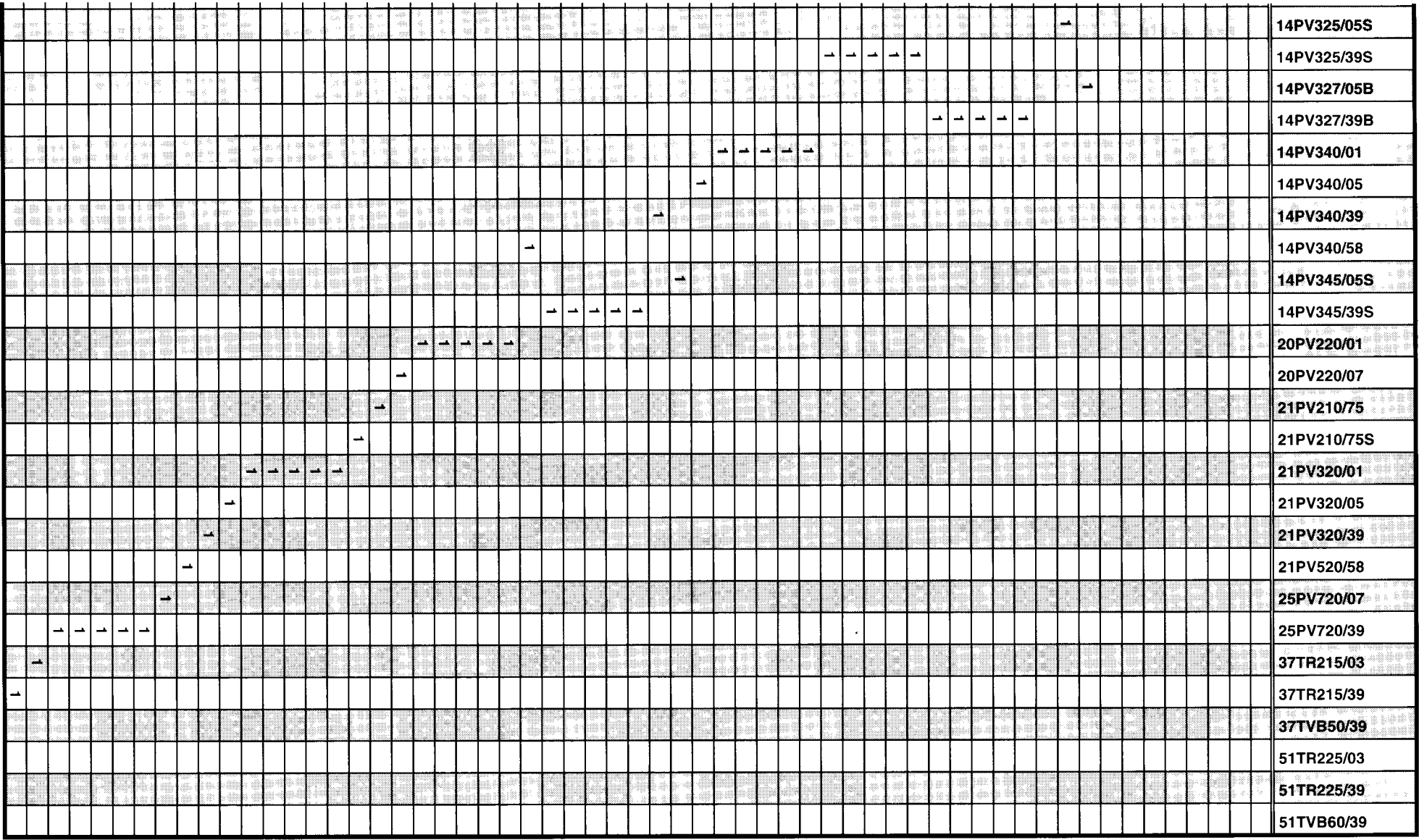
14PV325/05S
14PV325/39S
14PV327/05B
14PV327/39B
14PV340/01
14PV340/05
14PV340/39
14PV340/58
14PV345/05S
14PV345/39S
20PV220/01
20PV220/07
21PV210/75
21PV210/75S
21PV320/01
21PV320/05
21PV320/39
21PV520/58
25PV720/07
25PV720/39
37TR215/03
37TR215/39
37TVB50/39
51TR225/03
51TR225/39
51TVB60/39

Pos	⚠	Service Code	Description	14PV210/01	14PV210/07	14PV210/39	14PV210/58	14PV210/75	14PV210/75S	14PV320/01	14PV320/05
150/11		310316624050	37TVB50/39 FR								
150/11		310316623930	51TR225/03 NL								
150/11		310316623890	51TR225/39 FR								
150/11		310316623880	51TVB60/39 FR								
			CABLES AND CABLE TREES								
8001		310314027360	FFC 7F. TD1-1965	1	1	1	1	1	1	1	1
8002		310314026880	CABLE 2F. TD2-1961	1	1	1	1	1	1	1	1
8003		482232011892	FFC 6F. TD4-1930	1	1	1	1	1	1	1	1
8004		310314027370	FFC 3F. TD3-1947	1	1	1	1	1	1	1	1
8006		310314027040	CABLE 10F. 1980-1962	1	1	1	1	1	1	1	1
8007		310314027050	CABLE 9F. 1963-1964	1	1	1	1	1	1	1	1
8008		310314027100	CABLE 10F. 1966-1913	1	1	1	1	1	1	1	1
8009		310314027260	CABLE 3F. 1969-1967 (Stereo)								
8010		310314027070	CABLE 7F. 1976-1921 (Stereo)								
8011		310314027090	CABLE 5F. 1995-1925								
8012		310314027300	CABLE 6F. 1999-1907 (20,21,25")								
8012		310314027080	CABLE 6F.1999-1907 (14")	1	1	1	1	1	1	1	1
8013		310314027250	CABLE 9F. 1905-1909								
8014		310314027190	CABLE 4F. 1984-1126 (Radio)								
8015		310314027180	CABLE 4F. 1904-1124 (Radio)								
8016	⚠	482232111462	MAINS CORD	1		1	1	1	1	1	
8016	⚠	482232111461	MAINS CORD (England version /05)		1						1
8017		310314027160	CABLE 11F. 1983-1941								
8017		310314027060	CABLE 6F. 1940-1982					1	1	1	1
8019		310314027270	CABLE 2F. 1996-Speaker Right	1	1	1	1	1	1	1	1
8020		310314027350	CABLE 2F. 1997-Speaker Left								
8021		310314027390	CABLE 4F. 1950-Deflection								
8023		310314027150	CABLE SHIELDED Tuner1-Tuner2							1	1
8024	⚠	482230350063	ANTENNA WIRE FM PIGTAL (Radio)								
			TUBES AND TUBE RELATED ITEMS								
1100	⚠	482213111184	CRT A59EAK071X11 (25" Tube)								
1100	⚠	930183400342	CRT A51EAL155X49 (21" Tube)								
1100	⚠	932213646682	CRT A48JRV90X34 (20" Tube)								
1100		932213652682	CRT A34JLL90X83(SAK) (14" Tube)	1	1	1	1	1	1	1	1
5000		310313826340	DEGAUSSING COIL 14"	1	1	1	1	1	1	1	1
5000		310313826370	DEGAUSSING COIL 20"/21"								
5000		310313826380	DEGAUSSING COIL 25"								
8000		310314027320	BRAIDED STRAP ASSY 14"	1	1	1	1	1	1	1	1
8000		310314027330	BRAIDED STRAP ASSY 20"								
8000		310314027340	BRAIDED STRAP ASSY 21,25"								
			DOCUMENTATION								
9000		310378520000	SERVICE MANUAL DE	1	1	1	1	1	1	1	1
9001		310378520010	SERVICE MANUAL EN	1	1	1	1	1	1	1	1
9002		310378520020	SERVICE MANUAL FR	1	1	1	1	1	1	1	1
9003		310378520030	SERVICE MANUAL NL	1	1	1	1	1	1	1	1
9004		310378520040	SERVICE MANUAL IT	1	1	1	1	1	1	1	1
9005		310378520050	SERVICE MANUAL ES	1	1	1	1	1	1	1	1
9010		310378520060	SERVICE DIAGRAM TVCR99/Delta	1	1	1	1	1	1	1	1
			SUB MODULES								
1003	⚠	310319883940	PCB ASSY MFSWD								
1004	⚠	310319884750	PCB ASSY DOSCD2								
1004	⚠	310319883930	PCB ASSY DOSCD1								
1005	⚠	430330834050	RADIOMODULE (TUNER ECO 5/01-2B)								
1006	⚠	310319884110	PCB ASSY KB1D								
1006	⚠	310319884120	PCB ASSY KB2DP					1	1	1	1
1006	⚠	310319884800	PCB ASSY KB2DB								
1970	⚠	310319884250	PCB ASSY SFDP1								
1970	⚠	310319884770	PCB ASSY SFDP2								

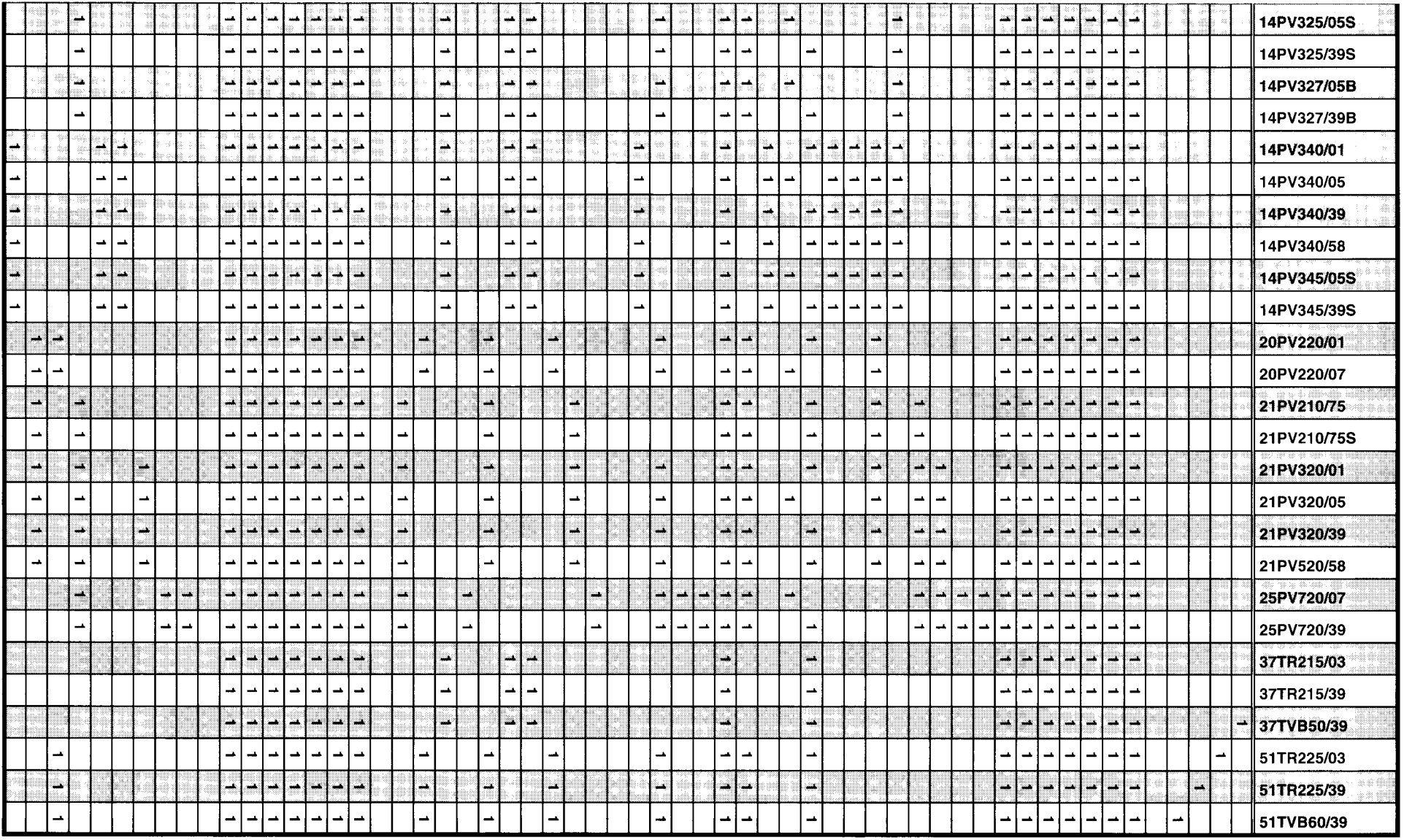

TV-Board (TVBAD), CRT Board, HPAV-Board, Switch Board

MISCELLANEOUS

1001 ▲	242212802786	MAINS SWITCH
1002 ▲	242212802786	MAINS SWITCH
1200	992252000489	CRYSTAL 4,43MHZ
1201	482224210462	CRYSTAL 3,57MHZ
1301 ▲	482226511253	FUSE HOLDER
1302 ▲	482207031602	FUSE T 1,6A
1303 ▲	482225251185	PROT 630mA
1304 ▲	242208610919	PROT 125mA
1391 ▲	482225251175	PROT 2.5A
1700	313914715330	TUNER UV1316T / AI
1701	482221010841	TUNER UV1316
1702	482224210428	FILTER EFC 5,5MHz
1702	482224270279	FILTER EFC 6MHz
1702	482224210429	FILTER EFC 6,5MHz
1703	482224270279	FILTER EFC 6MHz
1703	482224210429	FILTER EFC 6,5MHz
1704	482224272586	FILTER TPS 5,5MHz
1704	482224210322	FILTER TPS 5,5/6,0MHz
1704	482224281572	FILTER TPS 6,0MHz
1704	482224281301	FILTER TPS 6,5MHz
1705	482224281572	FILTER TPS 6,0MHz
1705	482224281301	FILTER TPS 6,5MHz
1707	482224281737	OFW G1965M
1707	482224210575	OFW J1980M
1707	482224281388	OFW G1961M
1708	482224281436	OFW K3953M
1708	482224281737	OFW G1965M
1708	482224272197	OFW K2955M
1709	482224210307	OFW G3956M
1710	482224210688	OFW K9456M
1711	482224210688	OFW K9456M
1905	482226541391	CONNECTOR 9 Pins
1931	482226520723	CONNECTOR 2 Pins
1932	482226520723	CONNECTOR 2 Pins
1933	482226710774	CONNECTOR 2 Pins RED
1934	482226520723	CONNECTOR 2 Pins
1950	242202516134	CONNECTOR 4 Pins
1955 ▲	482225570293	CRT SOCKET 4454-S (14")
1958 ▲	482226710922	CRT SOCKET 4446-S7(20,21,25")
1961	482232310312	CABLE ASSY AQUADAC-14"
1961 ▲	310314027460	CABLE ASSY AQUADAC-20,21"
1961	482232310307	CABLE ASSY AQUADAC-25"
1962	242202510771	CONNECTOR 10 Pins
1963	482224281099	CRYSTAL 12,000MHZ
1964	242202510772	CONNECTOR 12 Pins
1966	242202510772	CONNECTOR 12 Pins
1969	482226531215	CONNECTOR 3 Pins
1978	482226511422	SCART SOCKET
1992	482226511606	CONNECTOR CINCH (Stereo)
1993	482226510481	CONNECTOR CINCH (Mono)
1995	482226710637	SOCKET 5 Pins
1996	482226531215	CONNECTOR 3 Pins
1997	482226531215	CONNECTOR 3 Pins
1998	482226731014	HEADPHONES JACK
1999	242202508149	CONNECTOR 6 Pins

CAPACITORS

2175	482212412265	4,7 µF	250V
2177	482212613694	68 pF	50V
2177	532212232531	100 pF	50V
2178	482212613694	68 pF	50V
2178	482212613695	82 pF	50V
2179	482212613695	82 pF	50V
2179	482212613694	68 pF	50V
2186	482212614153	2,2 nF	1KV
2200	482212610002	100 nF	25V
2201	482212613836	1 µF	16V
2202	482212441576	2,2 µF	50V
2203	532212232654	22 nF	50V
2204	202255205428	18 pF	50V
2205	482212614076	220 nF	25V
2207	482212233175	2,2 nF	50V
2209	202255205428	18 pF	50V
2210	482212233175	2,2 nF	50V
2211	482212613196	100 nF	16V
2212	482212441643	100 µF	16V
2213	482212233177	10 nF	50V
2214	482212233891	3,3 nF	50V
2215	482212613695	82 pF	50V
2216	482212422651	1 µF	50V
2217	482212421732	10 µF	25V
2218	482212610002	100 nF	25V
2219	482212610002	100 nF	25V
2220	482212610002	100 nF	25V
2221	482212614076	220 nF	25V
2222	532212234123	1 nF	50V
2223	532212232654	22 nF	50V
2224	532212610511	1 nF	50V
2225	532212610511	1 nF	50V
2226	532212234123	1 nF	50V
2227	532212142386	100 nF	63V
2228	482212422651	1 µF	50V
2229	532212610223	4,7 nF	50V
2230	532212234123	1 nF	50V
2231	482212613836	1 µF	16V
2232	482212233177	10 nF	50V
2233	482212440769	4,7 µF	50V
2234	482212610002	100 nF	25V
2235	482212610002	100 nF	25V
2236	482212610002	100 nF	25V
2237	532212232531	100 pF	50V
2238	532212234123	1 nF	50V
2301	482212231175	1 nF	500V
2302 ▲	202233000018	470 nF	275V
2304	482212231175	1 nF	500V
2305	482212231175	1 nF	500V
2306 ▲	482212614088	2,2 nF	250V
2309	482212250116	470 pF	1KV
2311	482212412439	100 µF	400V
2312	482212412415	220 µF	400V
2313	202231800108	47 nF	250V
2316	482212613337	220 pF	1KV
2317	482212250116	470 pF	1KV
2319	532212234123	1 nF	50V
2320	482212610002	100 nF	50V
2321	482212610002	100 nF	50V
2323	202002191431	22 µF	100V
2325	482212613692	47 pF	50V
2339	482212480061	1000 µF	25V
2340	482212412056	1000 µF	35V
2341	482212231177	470 pF	500V
2342	482212610002	100 nF	50V
2343	482212613196	100 nF	25V
2343	482212233177	10 nF	50V
2344	532212232331	1 nF	50V
2345	532212232268	470 pF	50V
2346	532212232268	470 pF	50V
2350	482212613337	220 pF	1KV
2351	482212412285	S2200 µF	16V
2352	202002191444	3300 µF	16V
2353	202002191496	100 µF	160V
2355	482212610002	100 nF	50V
2356	482212231211	100 pF	500V
2357	482212233175	2,2 nF	50V
2358	482212610002	100 nF	50V
2359	202002191448	220 µF	160V
2360	482212480061	1000 µF	25V
2361	532212610511	1 nF	50V
2362	532212610511	1 nF	50V
2370	482212480061	1000 µF	25V
2371	482212250116	470 pF	1KV
2372	482212421732	10 µF	25V
2373	482212610002	100 nF	50V
2374	482212421732	10 µF	25V
2383	482212141857	10 nF	250V
2385	482212421732	10 µF	25V

▲ ... Safety component, use only this type

TV-Board (TVBAD), CRT Board, HPAV-Board, Switch Board

2391	482212250116	470 pF	1KV
2393	482212441643	100 µF	16V
2400	482211610056	VDR	21V
2401	482211610056	VDR	21V
2402	482212613836	1 µF	16V
2403	532212231863	330 pF	50V
2404	482212613196	100 nF	16V
2405	532212231863	330 pF	50V
2406	482212613836	1 µF	16V
2407	482212480231	47 µF	16V
2408	482212421732	10 µF	25V
2451	482212480231	47 µF	16V
2452	482212411767	470 µF	25V
2453	482212613836	1 µF	16V
2454	482212613836	1 µF	16V
2455	482212412056	1000 µF	35V
2456	482212610002	100 nF	50V
2458	482212233177	10 nF	50V
2460	482212412056	1000 µF	35V
2461	482212412056	1000 µF	35V
2462	482212233177	10 nF	50V
2463	482212613196	100 nF	16V
2464	532212234123	1 nF	50V
2465	532212610223	4,7 nF	50V
2501	532212142578	100 nF	250V
2502	202030890151	100 nF	100V
2503	482212231175	1 nF	500V
2504	532212231863	330 pF	50V
2514	482212412266	47 µF	50V
2514	202001293595	47 µF	50V
2517	482212141857	10 nF	250V
2518	202055890485	680 pF	2KV
2519	202233300173	10 nF	1KV
2519	202233300171	8,2 nF	1,2KV
2520	202233300174	1 nF	1KV
2522	202233300169	33 nF	630V
2523	482212412265	4,7 µF	250V
2524	202233300085	390 nF	250V
2525	482212250116	470 pF	1KV
2526	202233300167	560 nF	250V
2527	482212441576	2,2 µF	50V
2528	532212142386	100 nF	50V
2529	532212234123	1 nF	50V
2530	202233300086	470 nF	250V
2531	202233300168	680 nF	250V
2535	532212142661	330 nF	50V
2537	482212440255	100 µF	50V
2539	482212480061	1000 µF	25V
2544	482212422833	10 µF	50V
2545	482212422833	10 µF	50V
2548	482212422833	10 µF	50V
2558	532212234123	1 nF	50V
2559	532212234123	1 nF	50V
2560	532212234123	1 nF	50V
2562	482212233177	10 nF	50V
2563	532212142386	100 nF	50V
2603	482212613836	1 µF	16V
2606	482212613836	1 µF	16V
2607	482212613836	1 µF	16V
2608	482212613836	1 µF	16V
2700	532212234123	1 nF	50V
2701	482212233575	220 pF	50V
2701	532212233861	120 pF	50V
2702	482212480231	47 µF	16V
2703	482212233797	47 nF	50V
2704	482212441643	100 µF	16V
2705	532212232654	22 nF	50V
2707	482212610002	100 nF	25V
2708	482212613692	47 pF	50V
2709	482212480231	47 µF	16V
2710	482212233177	10 nF	50V
2711	482212233177	10 nF	50V
2712	482212613836	1 µF	16V
2713	482212421732	10 µF	25V
2714	482212440769	4,7 µF	50V
2715	482212610002	100 nF	25V
2716	482212613836	1 µF	16V
2717	482212440769	4,7 µF	50V
2718	482212613196	100 nF	16V
2719	482212233891	3,3 nF	50V
2720	482212441576	2,2 µF	50V
2721	482212233575	220 pF	50V
2721	532212233861	120 pF	50V
2722	482212411946	22 µF	16V
2723	532212441948	0,47 µF	50V
2725	482212613482	470 nF	16V
2726	532212232448	10 pF	50V
2727	482212481151	22 µF	50V
2728	482212441576	2,2 µF	50V
2729	482212613196	100 nF	16V
2730	482212411946	22 µF	16V
2731	482212610002	100 nF	25V
2732	532212233244	8,2 pF	50V
2733	482212614076	220 nF	25V
2734	482212441576	2,2 µF	50V
2735	482212233177	10 nF	50V
2740	482212480231	47 µF	16V
2741	482212613836	1 µF	16V
2809	482212610002	100 nF	25V
2810	482212613693	56 pF	50V
2811	482212613693	56 pF	50V
2812	482212610002	100 nF	25V
2813	482212610002	100 nF	25V
2814	482212610002	100 nF	25V
2815	482212610002	100 nF	25V
2816	482212610002	100 nF	25V
2820	482212610002	100 nF	25V
2821	482212614076	220 nF	25V
2900	482212481029	100 µF	25V
2901	482212610002	100 nF	25V
2902	482212613836	1 µF	16V
2903	482212613836	1 µF	16V
2904	482212613836	1 µF	16V
2905	482212421732	10 µF	25V
2906	482212421732	10 µF	25V
2907	532212231863	330 pF	50V
2907	532212234123	1 nF	50V
2908	482212613836	1 µF	16V
2909	532212232268	470 pF	50V
2910	482212614076	220 nF	25V
2911	532212232268	470 pF	50V
2912	482212613836	1 µF	16V
2913	532212231863	330 pF	50V
2914	482212614076	220 nF	25V
2915	482212421732	10 µF	25V
2916	482212613836	1 µF	16V
2917	482212613836	1 µF	16V
2918	482212613836	1 µF	16V
2919	482212613836	1 µF	16V
2920	482212610002	100 nF	25V
2921	532212232268	470 pF	50V
2922	532212232268	470 pF	50V
2923	482212613836	1 µF	16V
2924	482212610002	100 nF	25V
2951	482212610002	100 nF	25V

RESISTORS

3169	482205120479	47 R	0,1W
3170	482211711139	1,5 K	0,1W
3170	482211711454	820 R	0,1W
3170	482205110102	1 K	0,1W
3170	482205120681	680 R	0,1W
3171	482205120472	4,7 K	0,1W
3171	482205120562	5,6 K	0,1W
3171	482211710833	10 K	0,1W
3172	482211711139	1,5 K	0,1W
3172	482211711454	820 R	0,1W
3172	482205110102	1 K	0,1W

⚠ ... Safety component, use only this type

TV-Board (TVBAD), CRT Board, HPAV-Board, Switch Board

3173	482211710833	10 K	0,1W
3173	482205120472	4,7 K	0,1W
3173	482205120562	5,6 K	0,1W
3174	482205120681	680 R	0,1W
3174	482205120122	1,2 K	0,1W
3174	482211711454	820 R	0,1W
3174	482205110102	1 K	0,1W
3175	482205120562	5,6 K	0,1W
3175	482205120472	4,7 K	0,1W
3175	482211710833	10 K	0,1W
3176	482205120681	680 R	0,1W
3177	482205211152	1,5 K	
3179	482205211152	1,5 K	
3181	482205211152	1,5 K	
3182	319801222230	22 K	
3183	482205110102	1 K	0,1W
3183	482205120681	680 R	0,1W
3184	482205120479	47 R	0,1W
3186	482205211152	1,5 K	
3187	319801222230	22 K	
3188	482205120681	680 R	0,1W
3188	482205110102	1 K	0,1W
3193	319801222230	22 K	
3194	482205110102	1 K	0,1W
3194	482205120681	680 R	0,1W
3195	482205120479	47 R	0,1W
3199 ▲	212010190373	3,3 K	FUSE
3203	482211711449	2,2 K	0,1W
3204	482211711139	1,5 K	0,1W
3205	482205120225	2,2 M	
3206	482211652272	330 K	0,16W
3207	482211652235	1 M	0,16W
3208	482205120108	1 R	
3209	482211713579	220 K	0,1W
3210	482205120105	1 M	0,1W
3211	482205120153	15 K	0,1W
3212	482205120153	15 K	0,1W
3213	482205120104	100 K	0,1W
3216	482205120101	100 R	0,1W
3217	482205120101	100 R	0,1W
3218	482205120334	330 K	0,1W
3219	482211711507	6,8 K	0,1W
3220	482205120394	390 K	0,1W
3221	482205120101	100 R	0,1W
3222	482205120681	680 R	0,1W
3223	482205120393	39 K	0,1W
3223	482205110102	1 K	0,1W
3224	482205120101	100 R	0,1W
3225	482205011002	1 K	0,16W
3226	482205120472	4,7 K	0,1W
3227	482205110102	1 K	0,1W
3228	482205120104	100 K	0,1W
3229	482211713579	220 K	0,1W
3230	482205120273	27 K	0,1W
3231	482205110102	1 K	0,1W
3232	482205110102	1 K	0,1W
3233	482211711139	1,5 K	0,1W
3234	482205110102	1 K	0,1W
3235	482205011002	1 K	0,16W
3236	482205011002	1 K	0,16W
3237	482205120332	3,3 K	0,1W
3239	482211712708	39 K	
3242	482205120153	15 K	0,1W
3243	482205120225	2,2 M	
3243	482205120106	10 M	
3244	482205120475	4,7 M	0,1W
3244	482205120684	680 K	0,1W
3245	482211710965	18 K	0,1W
3247	482205120471	470 R	0,1W
3248	482205120153	15 K	0,1W
3249	482205120681	680 R	0,1W
3250	482211710965	18 K	0,1W
3251	482211711449	2,2 K	0,1W
3252	482205120108	1 R	
3253	482211680176	1 R	0,16W
3254	482205120108	1 R	
3255	482205120108	1 R	
3256	482205120108	1 R	
3301 ▲	482205321335	3,3 M	
3302	482211621227	VDR	470V
3303	482211683872	220 R	
3305	212025390255	2,2 R	
3306	212266300004	500 R	PTC
3307 ▲	482205321335	3,3 M	
3308 ▲	482205321335	3,3 M	
3311	319801232230	22 K	3W
3314 ▲	482205211102	1 K	
3315 ▲	482205211102	1 K	
3317	482205120472	4,7 K	0,1W
3318	212010892641	180 K	
3319	482205120479	47 R	0,1W
3320 ▲	482205210479	47 R	
3322 ▲	482205210479	47 R	FUSE
3326	319801213370	0,33 R	1W
3326	319801214770	0,47 R	1W
3327	319801213370	0,33 R	1W
3328	212010690607	1,8 R	
3330	482205120332	3,3 K	
3330	212010892621	2,7 K	
3331	482205110102	1 K	0,1W
3334 ▲	482205321335	3,3 M	
3335 ▲	482205211102	1 K	
3336	482205120332	3,3 K	
3339	482211652175	100 R	0,16W
3341	482205120101	100 R	0,1W
3342	482205120471	470 R	0,1W
3343	482211710834	47 K	0,1W
3344	212010892624	4,7 K	
3346	212010893869	91 K	
3347	212010893872	360 K	
3347	212010893871	240 K	
3348	482210111383	470 R	
3350	319801231010	100 R	3W
3355	482205120472	4,7 K	0,1W
3355	482211711507	6,8 K	0,1W
3356	482205120472	4,7 K	0,1W
3356	482211711507	6,8 K	0,1W
3357	482205120472	4,7 K	0,1W
3357	482211711507	6,8 K	0,1W
3358	482205120104	100 K	0,1W
3360	482211652257	22 K	0,16W
3362	482205110102	1 K	0,1W
3363	482205120223	22 K	0,1W
3370	232215621209	12 R	
3371	482211710833	10 K	0,1W
3372	482205120331	330 R	0,1W
3373	482205120471	470 R	0,1W
3375	482205120471	470 R	0,1W
3380	482211652283	4,7 K	0,16W
3383	482205120228	2,2 R	
3384	482211710833	10 K	0,1W
3385	482211711449	2,2 K	0,1W
3386	482205120471	470 R	0,1W
3392	482205110102	1 K	0,1W
3393	482205110102	1 K	0,1W
3395	212010892625	5,6 K	
3396	212010893867	5,1 K	
3397	482205110102	1 K	0,1W
3400	482211710833	10 K	0,1W
3401	482211710833	10 K	0,1W
3402	482205014709	47 R	
3403	482205014709	47 R	
3404	482205120474	470 K	0,1W
3405	482205120334	330 K	0,1W
3405	482211710834	47 K	0,1W
3406	482205110102	1 K	0,1W
3407	482205120684	680 K	0,1W
3408	482211710833	10 K	0,1W
3409	482205110102	1 K	0,1W
3410	482211710834	47 K	0,1W

▲ ... Safety component, use only this type

TV-Board (TVBAD), CRT Board, HPAV-Board, Switch Board

3411	482205120474	470 K	0,1W
3412	482205120684	680 K	0,1W
3413	482211710833	10 K	0,1W
3414	482205120759	75 R	0,1W
3415	482211710833	10 K	0,1W
3416	482205120108	1 R	
3416	482211710833	10 K	0,1W
3417	482205120223	22 K	0,1W
3418	482205014709	47 R	
3419	482205014709	47 R	
3420	482211711448	180 R	0,1W
3421	482211711448	180 R	0,1W
3450	482211683864	10 K	0,16W
3451	482205011002	1 K	0,16W
3452	482211683864	10 K	0,16W
3452	482211652238	12 K	0,16W
3453	482205120683	68 K	0,1W
3454	482205120104	100 K	0,1W
3455	482205120101	100 R	0,1W
3456	482211710833	10 K	0,1W
3457	482205011002	1 K	0,16W
3458	482205120101	100 R	0,1W
3460	482205120108	1 R	
3463	482205110102	1 K	0,1W
3465	482205120471	470 R	0,1W
3467	482211712955	2,7 K	0,1W
3467	482205120332	3,3 K	0,1W
3467	482205120472	4,7 K	0,1W
3468	482211652283	4,7 K	0,16W
3469	482211652283	4,7 K	0,16W
3469	482211680176	1 R	0,16W
3470	482211711139	1,5 K	0,1W
3471	482211711139	1,5 K	0,1W
3472	482211711507	6,8 K	0,1W
3473	482211652207	1,2 K	0,16W
3474	482205011002	1 K	0,16W
3502	212011290136	4,7 K	7W
3503	212010593472	5,6 K	3W
3504	482211712473	4,7 K	5W
3505	482211652256	2,2 K	0,16W
3506	482211710353	150 R	0,1W
3515	319801214790	47 R	1W
3520	482211652191	33 R	0,16W
3522 ⚠	482205211102	1 K	FUSE
3523 ⚠	232220733103	10 K	FUSE
3524	319801232280	2,2 R	3W
3525	482205320334	330 K	
3525	482205320224	220 K	
3526	482205120223	22 K	0,1W
3527	482205320334	330 K	
3527	482205320224	220 K	
3528	482205120683	68 K	0,1W
3529	482205011002	1 K	0,16W
3530 ⚠	482205210108	1 R	
3530 ⚠	482205210338	3,3 R	FUSE
3530 ⚠	482205210478	4,7 R	FUSE
3531 ⚠	482205210338	3,3 R	FUSE
3531 ⚠	482205210108	1 R	FUSE
3531 ⚠	482205210478	4,7 R	FUSE
3532 ⚠	482205211828	8,2 R	FUSE
3532 ⚠	482205211478	4,7 R	FUSE
3534	482211683882	39 K	0,16W
3534	482211652291	56 K	0,16W
3534	482211683884	47 K	0,16W
3535	482211652264	27 K	0,16W
3537 ⚠	482205211478	4,7 R	FUSE
3538 ⚠	482205211108	1 R	FUSE
3540	482205120333	33 K	0,1W
3541	482205110102	1 K	0,1W
3542	482205120683	68 K	0,1W
3543	482211710833	10 K	0,1W
3544	482211711507	6,8 K	0,1W
3545	482211652244	15 K	0,16W
3546	482205120104	100 K	0,1W
3547	482205120104	100 K	0,1W
3548	482211710834	47 K	0,1W
3549	482205120104	100 K	0,1W
3550	482211710834	47 K	0,1W
3551	482211713579	220 K	0,1W
3551	482205120474	470 K	0,1W
3552	482205120105	1 M	0,1W
3553	482205110102	1 K	0,1W
3555	482211711503	220 R	0,1W
3556	482211711503	220 R	0,1W
3557	482211710965	18 K	0,1W
3557	482211711383	12 K	0,1W
3557	482205120153	15 K	0,1W
3561	482205011002	1 K	0,16W
3561	482211652228	680 R	0,16W
3562	482211652219	330 R	0,16W
3562	482211652228	680 R	0,16W
3563	532211653564	3,3 R	
3563	482211130819	2,7 R	
3563	482211681154	2,2 R	0,16W
3563	482211680176	1 R	0,16W
3564	532211653564	3,3 R	
3564	482211130819	2,7 R	
3564	482211680176	1 R	0,16W
3565	482211683872	220 R	0,16W
3566	482211683872	220 R	0,16W
3567	482205120153	15 K	0,1W
3568	482211652283	4,7 K	0,16W
3569	482211683864	10 K	0,16W
3610	482205120104	100 K	0,1W
3613	482205120104	100 K	0,1W
3614	482205120104	100 K	0,1W
3615	482205120104	100 K	0,1W
3700	482211652175	100 R	0,16W
3701	482211652175	100 R	0,16W
3702	482211711504	270 R	0,1W
3702	482211711448	180 R	0,1W
3702	482205120108	1 R	
3703	482205120472	4,7 K	0,1W
3704	482205120122	1,2 K	0,1W
3705	482205120471	470 R	0,1W
3706	482205120471	470 R	0,1W
3707	482205120561	560 R	0,1W
3707	482205120122	1,2 K	0,1W
3708	482205120333	33 K	0,1W
3709	482205120154	150 K	0,1W
3710	482205120472	4,7 K	0,1W
3711	482205120561	560 R	0,1W
3711	482211711454	820 R	0,1W
3712	482205120681	680 R	0,1W
3713	482205110102	1 K	0,1W
3713	482205120108	1 R	
3713	482211711139	1,5 K	0,1W
3714	482211711504	270 R	0,1W
3714	482211711448	180 R	0,1W
3714	482205120331	330 R	0,1W
3715	482205120471	470 R	0,1W
3716	482211711139	1,5 K	0,1W
3717	482211711139	1,5 K	0,1W
3718	482211711448	180 R	0,1W
3719	482211652243	1,5 K	0,16W
3720	482205120391	390 R	0,1W
3723	482205120683	68 K	0,1W
3724	482205120472	4,7 K	0,1W
3725	482205120108	1 R	
3725	482205110102	1 K	0,1W
3725	482211711139	1,5 K	0,1W
3726	482205011002	1 K	0,16W
3727	482211652219	330 R	0,16W
3728	482205120472	4,7 K	0,1W
3729	482205120472	4,7 K	0,1W
3730	482205120273	27 K	0,1W
3731	482205120471	470 R	0,1W
3733	482205120101	100 R	0,1W
3735	482205120562	5,6 K	0,1W
3736	482205120331	330 R	0,1W

⚠ ... Safety component, use only this type

TV-Board (TVBAD), CRT Board, HPAV-Board, Switch Board

3737	482211710965	18 K	0,1W
3738	482211710965	18 K	0,1W
3740	482205120472	4,7 K	0,1W
3741	482205120472	4,7 K	0,1W
3742	482205120394	390 K	0,1W
3743	482205110102	1 K	0,1W
3744	482205120681	680 R	0,1W
3745	482205120471	470 R	0,1W
3801	482211710834	47 K	0,1W
3802	482205110102	1 K	0,1W
3803	482205120472	4,7 K	0,1W
3804	482211710833	10 K	0,1W
3805	482211711449	2,2 K	0,1W
3807	482211652175	100 R	0,16W
3808	482205120472	4,7 K	0,1W
3809	482205120101	100 R	0,1W
3810	482211683864	10 K	0,16W
3814	482211652175	100 R	0,16W
3815	482205120101	100 R	0,1W
3816	482205011002	1 K	0,16W
3818	482211652175	100 R	0,16W
3819	482205120101	100 R	0,1W
3820	482211710833	10 K	0,1W
3821	482205011002	1 K	0,16W
3822	482211710834	47 K	0,1W
3823	482205120332	3,3 K	0,1W
3825	482211710834	47 K	0,1W
3826	482211710833	10 K	0,1W
3827	482211652234	100 K	0,16W
3828	482211652175	100 R	0,16W
3829	482211710834	47 K	0,1W
3831	482205011002	1 K	0,16W
3832	482211652234	100 K	0,16W
3834	482205011002	1 K	0,16W
3835	482205011002	1 K	0,16W
3836	482205120104	100 K	0,1W
3837	482211683864	10 K	0,16W
3838	482205110102	1 K	0,1W
3839	482211683883	470 R	0,16W
3841	482211652234	100 K	0,16W
3843	482211710834	47 K	0,1W
3844	482211652234	100 K	0,16W
3845	482211711139	1,5 K	0,1W
3846	482211710834	47 K	0,1W
3847	482211652175	100 R	0,16W
3849	482211711454	820 R	0,1W
3850	212010893467	24 K	
3851	212010892604	82 R	
3852	212010892604	82 R	
3853	212010892604	82 R	
3858	482211710833	10 K	0,1W
3859	482211710834	47 K	0,1W
3860	482211652234	100 K	0,16W
3861	482211683864	10 K	0,16W
3864	482211683864	10 K	0,16W
3900	482205110102	1 K	0,1W
3901	482211710833	10 K	0,1W
3902	482211711503	220 R	0,1W
3903	482205120472	4,7 K	0,1W
3904	482211711507	6,8 K	0,1W
3905	482205120759	75 R	0,1W
3906	482211683868	150 R	0,16W
3907	482211713579	220 K	0,1W
3908	482211711139	1,5 K	0,1W
3909	482211652206	120 R	0,16W
3911	482205120759	75 R	0,1W
3912	482205120472	4,7 K	0,1W
3913	482205120759	75 R	0,1W
3914	482205120822	8,2 K	0,1W
3915	482205120759	75 R	0,1W
3916	482205120759	75 R	0,1W
3917	482211711449	2,2 K	0,1W
3918	482211713579	220 K	0,1W
3919	482205120334	330 K	0,1W
3920	482205120471	470 R	0,1W
3921	482205120101	100 R	0,1W
3922	482211710833	10 K	0,1W
3922	482205110102	1 K	0,1W
3923	482211710834	47 K	0,1W
3924	482205120472	4,7 K	0,1W
3925	482205120474	470 K	0,1W
3925	482211710834	47 K	0,1W
3926	482205120684	680 K	0,1W
3927	482211710833	10 K	0,1W
3928	482205120334	330 K	0,1W
3929	482205110102	1 K	0,1W
3930	482205120101	100 R	0,1W
3931	482211710834	47 K	0,1W
3932	482205120684	680 K	0,1W
3933	482205120472	4,7 K	0,1W
3934	482211710834	47 K	0,1W
3935	482205120108	1 R	
3936	482205120104	100 K	0,1W
3937	482205120104	100 K	0,1W
3938	482205120104	100 K	0,1W
3939	482205120472	4,7 K	0,1W
3940	482205120334	330 K	0,1W
3941	482205120684	680 K	0,1W
3942	482211711448	180 R	0,1W
3943	482211711448	180 R	0,1W
3945	482205120331	330 R	0,1W
3946	482211711504	270 R	0,1W
3947 ⚠	482205210478	4,7 R	FUSE
3951	482211711503	220 R	0,1W
3952	482211711503	220 R	0,1W

CHIP JUMPER

4195	482205120008	CHIP JUMPER
4196	482205120008	CHIP JUMPER
4197	482205120008	CHIP JUMPER
4200	482205120008	CHIP JUMPER
4201	482205120008	CHIP JUMPER
4202	482205120008	CHIP JUMPER
4228	482205120008	CHIP JUMPER
4229	482205120008	CHIP JUMPER
4230	482205120008	CHIP JUMPER
4240	482205120008	CHIP JUMPER
4241	482205120008	CHIP JUMPER
4242	482205120008	CHIP JUMPER
4321	482205120008	CHIP JUMPER
4359	482205120008	CHIP JUMPER
4402	482205120008	CHIP JUMPER
4410	482205120008	CHIP JUMPER
4444	482205120008	CHIP JUMPER
4450	482205120008	CHIP JUMPER
4451	482205120008	CHIP JUMPER
4452	482205120008	CHIP JUMPER
4453	482205120008	CHIP JUMPER
4454	482205120008	CHIP JUMPER
4455	482205120008	CHIP JUMPER
4457	482205120008	CHIP JUMPER
4556	482205120008	CHIP JUMPER
4600	482205120008	CHIP JUMPER
4601	482205120008	CHIP JUMPER
4621	482205120008	CHIP JUMPER
4622	482205120008	CHIP JUMPER
4700	482205120008	CHIP JUMPER
4701	482205120008	CHIP JUMPER
4702	482205120008	CHIP JUMPER
4704	482205120008	CHIP JUMPER
4707	482205120008	CHIP JUMPER
4711	482205120008	CHIP JUMPER
4723	482205120008	CHIP JUMPER
4724	482205120008	CHIP JUMPER
4726	482205120008	CHIP JUMPER
4727	482205120008	CHIP JUMPER
4728	482205120008	CHIP JUMPER
4800	482205120008	CHIP JUMPER

⚠ ... Safety component, use only this type

TV-Board (TVBAD), CRT Board, HPAV-Board, Switch Board

4801	482205120008	CHIP JUMPER
4802	482205120008	CHIP JUMPER
4803	482205120008	CHIP JUMPER
4821	482205120008	CHIP JUMPER
4822	482205120008	CHIP JUMPER
4823	482205120008	CHIP JUMPER
4824	482205120008	CHIP JUMPER
4825	482205120008	CHIP JUMPER
4901	482205120008	CHIP JUMPER
4902	482205120008	CHIP JUMPER
4906	482205120008	CHIP JUMPER
4907	482205120008	CHIP JUMPER
4912	482205120008	CHIP JUMPER
4920	482205120008	CHIP JUMPER
4922	482205120008	CHIP JUMPER
4923	482205120008	CHIP JUMPER
4924	482205120008	CHIP JUMPER
4929	482205120008	CHIP JUMPER
4935	482205120008	CHIP JUMPER
4939	482205120008	CHIP JUMPER
4956	482205120008	CHIP JUMPER
4957	482205120008	CHIP JUMPER

COILS

5190	482215771519	47µH
5190	482215771736	10µH
5200	482215771206	COIL BLM21
5201	482215771206	COIL BLM21
5202	482215771206	COIL BLM21
5203	482215771206	COIL BLM21
5204	482215771206	COIL BLM21
5205	482215771206	COIL BLM21
5301 ▲	482215711138	29mF
5302	242253594637	4,7µH
5303	242253594637	4,7µH
5304	482215711737	22µH
5305	482215711737	22µH
5312	482252610704	BEAD 100MHz
5313	482252610704	BEAD 100MHz
5330	820310791470	MAINS TRANSF. 14,20,21"
5330 ▲	820310791380	MAINS TRANSF. 25"
5340	482215771736	10µH
5350	482252610704	BEAD 100MHz
5351	482252610704	BEAD 100MHz
5360	482215771736	10µH
5370	482215751462	10µH
5380	482252610704	BEAD 100MHz
5500	482214621116	LINE DRIVER TRAFO 14,20,21"
5501	482214240353	LINE DRIVER TRAFO 25"
5502	482215771519	47µH
5518	482215711213	22µH
5518	482215771519	47µH
5519 ▲	312813820890	LINE TRANSFORMER 14,20,21"
5520 ▲	242253102341	LINE TRANSFORMER 25"
5522	482215650108	LINEARITY CORR.COIL
5525	482214010509	BRIDGE COIL
5526	482215810728	ENS TRANSFO
5700	482215711231	1µH
5701	482215770877	0,256µH
5703	482215711525	6,8µH
5704	482215710972	15µH
5704	482215711706	10µH
5705	482215711525	6,8µH
5706	482215711525	6,8µH
5707	482215770877	0,256µH
5708	482215711525	6,8µH
5712	482215710972	15µH
5801	482215771206	COIL BLM21
5802	482215771206	COIL BLM21
5803	482215771206	COIL BLM21

DIODES

6175	482213034382	BZX79-C8V2
6176	482213030842	BAV21
6178	482213030842	BAV21
6180	482213030842	BAV21
6183	482213083757	BAS216
6184	482213083757	BAS216
6185	482213083757	BAS216
6190	482213034142	BZX79-C33
6191	482213034142	BZX79-C33
6200	482213083757	BAS216
6201	482213030621	1N4148
6202	482213030621	1N4148
6203	482213083757	BAS216
6205	482213083757	BAS216
6220	482213083757	BAS216
6221	482213030842	BAV21
6234	482213031983	BAT85
6235	482213031983	BAT85
6236	482213031983	BAT85
6301	482213031083	1N5062
6302	482213031083	1N5062
6303	482213031083	1N5062
6304	482213031083	1N5062
6314	932212671673	BYT42M
6322	933428540673	BAV21
6325	482213031878	1N4003
6326	482213031878	1N4003
6340	482213011584	BYW98-200C1
6341	482213061219	BZX79-C10
6341	482213034197	BZX79-C12
6342	482213010871	SBYV27-200
6350	482213041602	BYW 95C/20
6351	932212671673	BYT42M
6355	933851840133	BZX79-F33
6356	932212671673	BYT42M
6357	482213083757	BAS216
6358	482213020294	THYRISTOR X0203MA
6370	932212671673	BYT42M
6372	933414680133	BZX79-C2V4
6373	532213031504	BZX79-F3V3
6374	482213083757	BAS216
6376	482213030842	BAV21
6377	482213030842	BAV21
6378	482213030842	BAV21
6381	482213030842	BAV21
6382	482213034278	BZX79-C6V8
6385	482213034173	BZX79-F5V6
6387	482213010654	BAT254
6390	932212868682	SB360
6391	482213011584	BYW98-200C1
6392	482213061219	BZX79-C10
6402	482213034278	BZX79-C6V8
6403	482213034278	BZX79-C6V8
6404	482213034278	BZX79-C6V8
6405	482213034278	BZX79-C6V8
6406	482213034278	BZX79-C6V8
6407	482213034278	BZX79-C6V8
6450	482213083757	BAS216
6451	482213083757	BAS216
6520	482213032896	BYD33M A
6521	933621580112	BY228/20
6522	482213041602	BYW 95C/20
6523	482213042488	BYD33D
6524	482213042488	BYD33D
6526	482213034278	BZX79-C6V8
6528	482213034142	BZX79-C33
6532	482213042606	BYD33J
6537	482213042488	BYD33D
6538	482213042488	BYD33D
6540	482213030842	BAV21
6541	482213034441	BZX79-C22
6542	482213034441	BZX79-C22
6543	482213034379	BZX79-C27

▲ ... Safety component, use only this type

TV-Board (TVBAD), CRT Board, HPAV-Board, Switch Board

6544	482213030842	BAV21
6545	482213034278	BZX79-C6V8
6547	482213030842	BAV21
6548	482213083757	BAS216
6549	482213034441	BZX79-C22
6550	482213034142	BZX79-C33
6551	482213083757	BAS216
6568	482213034441	BZX79-C22
6700	482213010414	BA792
6701	482213010414	BA792
6702	482213010414	BA792
6705	482213010414	BA792
6706	482213010414	BA792
6707	482213010414	BA792
6900	482213034197	BZX79-C12
6901	482213034197	BZX79-C12
6902	482213034197	BZX79-C12
6903	482213034197	BZX79-C12
6904	482213034197	BZX79-C12
6905	482213034197	BZX79-C12
6906	482213034197	BZX79-C12
6907	482213030621	1N4148
6908	482213030621	1N4148
6909	482213034197	BZX79-C12
6910	482213034197	BZX79-C12
6911	482213034197	BZX79-C12
6912	482213034197	BZX79-C12
6913	482213030621	1N4148

TRANSISTORS & IC's

7180	933259350126	BF422
7181	933259350126	BF422
7182	933259350126	BF422
7183	933259350126	BF422
7184	933259350126	BF422
7185	933259350126	BF422
7186	933259360126	BF423
7187	933259360126	BF423
7188	933259360126	BF423
7201	532213060508	BC857B
7204	482220973852	PMBT2369
7205	935262021112	TDA8840/N2/S1
7205	935262022112	TDA8841/N2/S1
7205	482220916775	TDA8842/N2/S1
7205	482220917221	TDA8844/N2/S1
7206	482213060511	BC847B
7208	482220973852	PMBT2369
7209	532213060508	BC857B
7210	532213060508	BC857B
7211	532213060508	BC857B
7212	482220960792	74HC4053D
7215	482220973852	PMBT2369
7219	482213060511	BC847B
7300	932213693687	FET POW 2SK2750
7310	932213656682	MC44608P75
7340 ▲	932212719682	OPT CP TCET1101G
7341	482220981397	TL431CZ-AP
7355	933259350126	BF422
7358	482213060511	BC847B
7370	933650090126	BC557C
7371	482213060511	BC847B
7375	482220933665	L78M08CV
7381	933650090126	BC557C
7382	482213060511	BC847B
7391	482213060838	2SK2232
7392	482220981397	TL431CZ-AP
7393	532213060508	BC857B
7400	482213060511	BC847B
7401	482213060511	BC847B
7450	932212839667	TDA7495
7450	932212840667	TDA7494
7451	482213060511	BC847B
7452	532213060508	BC857B
7501	482213041752	MPSA43
7520	482213063569	BU1508DX
7521	482213011575	BUT11APX L
7543	482213060511	BC847B
7547	532213060508	BC857B
7555	935262202112	TDA8356/N6
7556	935262194112	TDA8350Q/N6
7651	532220911102	HEF4052BT
7701	933372960653	HEF4053BT
7702	482213060511	BC847B
7704	532213060508	BC857B
7705	482220931555	TDA9830/V1
7706	482213060511	BC847B
7709	482213063732	PDTC124ET
7710	482213063732	PDTC124ET
7711	482213060511	BC847B
7712	482213063732	PDTC124ET
7713	482213063732	PDTC124ET
7714	482213063732	PDTC124ET
7715	482213063732	PDTC124ET
7716	482213063732	PDTC124ET
7720	935260611118	TDA9818T/V1
7800	482220973852	PMBT2369
7801	482220916908	M24C01-MN6
7802	482213063732	PDTC124ET
7803	482213063732	PDTC124ET
7804	935263640112	SAA5562PS
7806	482213040959	TRANS BC547B
7807	482213063732	PDTC124ET
7808	482213063732	PDTC124ET
7900	532213060508	BC857B
7901	482213060511	BC847B
7902	482213060511	BC847B
7903	532213060508	BC857B
7904	532220911102	HEF4052BT
7905	532213060508	BC857B
7906	532213042755	BC847C
7907	532213042755	BC847C
7908	482213060511	BC847B
7909	532213042755	BC847C

▲ ... Safety component, use only this type

Recorder Unit Board (RUBAD)

MISCELLANEOUS

0007	482225610195	TACHO HOLDER
0008	482225610196	TACHO HOLDER
0020	310315012050	SENSORHOLDER
0021	482225610197	SENSOR HOLDER DECK
0022	310315012050	SENSOR HOLDER
0030	482225610198	DISTANCE HOLDER
0031	482225610198	DISTANCE HOLDER
0032	482225610359	DISTANCE HOLDER MOBO
0033	482225610359	DISTANCE HOLDER MOBO
0034	482225610359	DISTANCE HOLDER MOBO
0040	482225541366	LED-SOCKET
0041	482225541366	LED-SOCKET
0042	482225541366	LED-SOCKET
0043	310315012060	IR-HOLDER
1000	482224210695	CRYSTAL 4,43MHZ
1151 ▲	482225251187	FUSE 500mA
1152 ▲	482225251187	FUSE 500mA
1153 ▲	482225251187	FUSE 500mA
1300	482224281436	OFW K3953M
1301	482221010773	TUNER UV1316
1302	482224210307	OFW G3956M
1302	482224210575	OFW J1980M
1302	482224281388	OFW G1961M
1302	482224272197	OFW K2955M
1304	482224272586	FILTER TPS 5,5MHz
1304	482224281572	FILTER TPS 6,0MHz
1304	482224281301	FILTER TPS 6,5MHz
1305	482224210688	OFW K9456M
1305	482224210306	OFW K9463M
1306	482224210428	FILTER EFC 5,5MHz
1306	482224270279	FILTER EFC 6MHz
1306	482224210429	FILTER EFC 6,5MHz
1307	482224270279	FILTER EFC 6MHz
1307	482224210429	FILTER EFC 6,5MHz
1670	482224210434	CRYSTAL 18,43MHz
1801	482227711521	SWITCH ASSY
1803	482227711521	SWITCH ASSY
1900	482227613732	SWITCH BUTTON
1901	482227613732	SWITCH BUTTON
1902	482227613732	SWITCH BUTTON
1903	482227613732	SWITCH BUTTON
1904	482227613732	SWITCH BUTTON
1905	482227613732	SWITCH BUTTON
1906	482227613732	SWITCH BUTTON
1907	242202508149	CONNECTOR 6 Pins
1908	482227613732	SWITCH BUTTON
1909	482227613732	SWITCH BUTTON
1910	482227613732	SWITCH BUTTON
1911	482226710364	CONNECTOR 9 Pins
1912	482226741199	CONNECTOR 5 Pins
1913	242202510772	CON BM V 12P M 2.00 PH B
1931	482224210956	CRYSTAL 20MHz
1946	482226710366	CAPSTAN-CONNECT.
1947	482226710957	CONNECTOR 3 Pins
1948	482226741062	CONNECTOR 6 Pins
1961	532226890415	CONNECTOR 2 Pins
1963	242202510772	CONNECTOR 12 Pins
1965	482226710953	CONNECTOR 7 Pins
1967	482226531215	CONNECTOR 3 Pins
1970	482224270938	CRYSTAL 32,768KHz
1980	242202510771	CONNECTOR 10 Pins
1981	482226710958	CONNECTOR 5 Pins
1982	242202508149	CONNECTOR 6 Pins
1983	242202510655	CONNECTOR 11 Pins
1984	242202509406	CONNECTOR 4 Pins

CAPACITORS

2000	482212610002	100 nF 25V
2001	482212613836	1 µF 16V
2002	482212233177	10 nF 50V
2003	482212233177	10 nF 50V
2004	482212233177	10 nF 50V
2005	482212610002	100 nF 25V
2006	482212412052	220 µF 6,3V
2008	482212613836	1 µF 16V
2009	482212613836	1 µF 16V
2010	482212233177	10 nF 50V
2011	482212233177	10 nF 50V
2012	482212422651	1 µF 50V
2013	482212233177	10 nF 50V
2014	482212610002	100 nF 25V
2015	482212613751	47 nF 25V
2016	532212232654	22 nF 50V
2017	482212610002	100 nF 25V
2018	482212233177	10 nF 50V
2019	532212231873	2,7 pF 50V
2020	482212613196	100 nF 16V
2021	482212422651	1 µF 50V
2022	482212421732	10 µF 25V
2023	482212480854	1 µF 50V
2024	482212480231	47 µF 16V
2025	482212233177	10 nF 50V
2026	482212610002	100 nF 25V
2027	482212421732	10 µF 25V
2028	482212613196	100 nF 16V
2029	482212610002	100 nF 25V
2030	482212411946	22 µF 16V
2031	482212233177	10 nF 50V
2032	482212613196	100 nF 16V
2033	482212613196	100 nF 16V
2034	482212422651	1 µF 50V
2035	482212440769	4,7 µF 50V
2036	482212610002	100 nF 25V
2037	482212613836	1 µF 16V
2041	482212411946	22 µF 16V
2042	482212233177	10 nF 50V
2043	482212233177	10 nF 50V
2044	532212232658	22 pF 50V
2045	482212613222	390 pF 50V
2046	482212614124	220 pF 50V
2048	482212233177	10 nF 50V
2050	482212613196	100 nF 16V
2051	482212412052	220 µF 6,3V
2052	482212613695	82 pF 50V
2053	482212610002	100 nF 25V
2054	532212232966	39 pF 50V
2055	482212610002	100 nF 25V
2056	532212232658	22 pF 50V
2057	482212422726	100 µF 16V
2058	482212233177	10 nF 50V
2059	482212233177	10 nF 50V
2060	482212613691	27 pF 50V
2061	482212233575	220 pF 50V
2062	482212480483	47 µF 6,3V
2070	482212233177	10 nF 50V
2071	532212233538	150 pF 50V
2072	482212233177	10 nF 50V
2073	482212610002	100 nF 25V
2074	482212614124	220 pF 50V
2075	482212613196	100 nF 16V
2076	482212613695	82 pF 50V
2077	482212233177	10 nF 50V
2078	482212613196	100 nF 16V
2079	482212422726	100 µF 16V
2080	532212232531	100 pF 50V
2082	482212233177	10 nF 50V
2083	482212233177	10 nF 50V
2084	482212233177	10 nF 50V
2085	482212421732	10 µF 25V
2086	482212613482	470 nF 16V
2087	532212610184	680 pF 50V
2088	482212613836	1 µF 16V
2089	532212232654	22 nF 50V
2090	482212233575	220 pF 50V
2091	532212232531	100 pF 50V
2092	482212233177	10 nF 50V

▲ ... Safety component, use only this type

Recorder Unit Board (RUBAD)

2100	482212233177	10 nF 50V
2101	532212232268	470 pF 50V
2102	482212233177	10 nF 50V
2103	482212233177	10 nF 50V
2104	482212614076	220 nF 25V
2105	482212422726	100 µF 16V
2106	532212232531	100 pF 50V
2107	532212232654	22 nF 50V
2108	532212232659	33 pF 50V
2109	482212233177	10 nF 50V
2110	482212233177	10 nF 50V
2111	482212233177	10 nF 50V
2112	482212233177	10 nF 50V
2113	482212233177	10 nF 50V
2114	482212233177	10 nF 50V
2115	482212233177	10 nF 50V
2116	482212233177	10 nF 50V
2117	482212233177	10 nF 50V
2118	482212233177	10 nF 50V
2150	482212480231	47 µF 16V
2154	482212421732	10 µF 25V
2160	202001293691	220 µF 16V
2161	482212422726	100 µF 16V
2305	482212421732	10 µF 25V
2306	482212480231	47 µF 16V
2307	482212233177	10 nF 50V
2308	482212421732	10 µF 25V
2309	532212441379	2,2 µF 50V
2310	532212232268	470 pF 50V
2311	482212610002	100 nF 25V
2312	482212614076	220 nF 25V
2313	482212610002	100 nF 25V
2314	482212614319	8,2 pF 50V
2315	482212610002	100 nF 25V
2316	482212233575	220 pF 50V
2317	532212233861	120 pF 50V
2318	482212233797	47 nF 50V
2319	532212234123	1 nF 50V
2320	482212422652	2,2 µF 50V
2321	482212480483	47 µF 6,3V
2322	532212232654	22 nF 50V
2323	482212411946	22 µF 16V
2324	482212233177	10 nF 50V
2325	482212481151	22 µF 50V
2461	532212610223	4,7 nF 50V
2462	482212480791	470 µF 16V
2463	482212233177	10 nF 50V
2471	482212480231	47 µF 16V
2472	482212422726	100 µF 16V
2473	532212610223	4,7 nF 50V
2474	482212233175	2,2 nF 50V
2475	482212480231	47 µF 16V
2476	482212612105	33 nF 50V
2477	482212610002	100 nF 25V
2478	482212233177	10 nF 50V
2479	482212233177	10 nF 50V
2480	482212422726	100 µF 16V
2482	482212610002	100 nF 25V
2483	532212232654	22 nF 50V
2484	482212480854	1 µF 50V
2485	482212480854	1 µF 50V
2486	482212480854	1 µF 50V
2487	482212610002	100 nF 25V
2489	482212422263	220 µF 25V
2490	482212610002	100 nF 25V
2491	532212232531	100 pF 50V
2492	532212232654	22 nF 50V
2493	482212233177	10 nF 50V
2494	482212610002	100 nF 25V
2495	482212233797	47 nF 50V
2496	532212232654	22 nF 50V
2497	482212233177	10 nF 50V
2501	482212480231	47 µF 16V
2600	482212610002	100 nF 25V
2601	482212411946	22 µF 16V
2602	482212480231	47 µF 16V
2603	482212421732	10 µF 25V
2604	482212612105	33 nF 50V
2605	482212233797	47 nF 50V
2606	482212612105	33 nF 50V
2607	482212612105	33 nF 50V
2608	482212613836	1 µF 16V
2609	482212610002	100 nF 25V
2610	482212480231	47 µF 16V
2611	482212613836	1 µF 16V
2612	482212610002	100 nF 25V
2613	482212233177	10 nF 50V
2614	482212480231	47 µF 16V
2615	482212421732	10 µF 25V
2616	482212233175	2,2 nF 50V
2617	482212613836	1 µF 16V
2618	482212610002	100 nF 25V
2619	482212614127	39 nF 50V
2620	482212233177	10 nF 50V
2621	532212232268	470 pF 50V
2622	482212613188	15 nF 50V
2624	532212610511	1 nF 50V
2625	532212610511	1 nF 50V
2626	482212480231	47 µF 16V
2627	532212610511	1 nF 50V
2628	482212421732	10 µF 25V
2629	482212613751	47 nF 25V
2630	482212143873	27 nF 50V
2631	482212610002	100 nF 25V
2632	482212610002	100 nF 25V
2633	482212422726	100 µF 16V
2634	482212422726	100 µF 16V
2636	532212610223	4,7 nF 50V
2637	482212233177	10 nF 50V
2640	482212480231	47 µF 16V
2641	482212610002	100 nF 25V
2642	482212422726	100 µF 16V
2643	532212232654	22 nF 50V
2644	482212422652	2,2 µF 50V
2646	482212613196	100 nF 16V
2647	482212480231	47 µF 16V
2648	482212421732	10 µF 25V
2649	532212231866	6,8 nF 50V
2650	482212421732	10 µF 25V
2651	482212480231	47 µF 16V
2652	482212421732	10 µF 25V
2653	532212231866	6,8 nF 50V
2654	482212421732	10 µF 25V
2655	482212422652	2,2 µF 50V
2656	482212422652	2,2 µF 50V
2658	482212614076	220 nF 25V
2659	482212614076	220 nF 25V
2660	482212614076	220 nF 25V
2661	482212614076	220 nF 25V
2662	482212614076	220 nF 25V
2663	482212614076	220 nF 25V
2664	482212614076	220 nF 25V
2666	482212233177	10 nF 50V
2667	482212610002	100 nF 25V
2670	482212421732	10 µF 25V
2671	482212233177	10 nF 50V
2673	482212421732	10 µF 25V
2674	482212610002	100 nF 25V
2675	482212233177	10 nF 50V
2676	482212421732	10 µF 25V
2677	482212233177	10 nF 50V
2678	482212421732	10 µF 25V
2679	482212233177	10 nF 50V
2680	482212440769	4,7 µF 50V
2681	532212232286	3,3 pF 50V
2682	532212232286	3,3 pF 50V
2683	482212233177	10 nF 50V
2685	482212421732	10 µF 25V
2690	532212234123	1 nF 50V
2691	482212422651	1 µF 50V

Recorder Unit Board (RUBAD)

2692	482212613693	56 pF	50V
2693	482212613693	56 pF	50V
2800	482212422263	220 µF	25V
2802	482212610002	100 nF	25V
2805	482212480231	47 µF	16V
2808	482212233575	220 pF	50V
2900	482212233177	10 nF	50V
2902	482212411946	22 µF	16V
2903	482212613836	1 µF	16V
2904	482212613691	27 pF	50V
2905	482212610002	100 nF	25V
2906	482212613691	27 pF	50V
2907	532212232659	33 pF	50V
2908	482212613196	100 nF	16V
2909	482212233177	10 nF	50V
2910	482212480231	47 µF	16V
2960	482212613482	470 nF	16V
2961	482212610002	100 nF	25V
2962	482212610002	100 nF	25V
2963	482212612105	33 nF	50V
2964	482212233175	2,2 nF	50V
2970	482212440181	1000 µF	6,3V
2971	482212411968	220 mF	5,5V
2972	482212613691	27 pF	50V
2973	482212233177	10 nF	50V
2975	482212233177	10 nF	50V
2991	482212233172	390 pF	50V
2993	482212233172	390 pF	50V
2994	482212440181	1000 µF	6,3V
2995	202001292782	10 µF	16V

RESISTORS

3002	482205120182	1,8 K	0,1W
3003	482211711449	2,2 K	0,1W
3008	482205120822	8,2 K	0,1W
3009	482205011002	1 K	0,16W
3010	482205120562	5,6 K	0,1W
3011	482211710834	47 K	0,1W
3012	482205120105	1 M	0,1W
3013	482211652175	100 R	0,16W
3014	482205011002	1 K	0,16W
3016	482211683884	47 K	0,16W
3017	482211683882	39 K	0,16W
3018	212010892619	2,2 K	
3019	482211711504	270 R	0,1W
3020	482211710833	10 K	0,1W
3020	482205120153	15 K	0,1W
3021	482205120334	330 K	0,1W
3022	212010892614	680 R	
3023	212010893465	1,3 K	
3025	482205120471	470 R	0,1W
3026	482211652175	100 R	0,16W
3027	212010892624	4,7 K	
3028	482205120471	470 R	0,1W
3029	482211652175	100 R	0,16W
3030	482211652228	680 R	0,16W
3031	482205110102	1 K	0,1W
3032	482211711449	2,2 K	0,1W
3033	482211652228	680 R	0,16W
3034	482211711449	2,2 K	0,1W
3035	482205120681	680 R	0,1W
3036	482211711449	2,2 K	0,1W
3037	482211683883	470 R	0,16W
3038	482211711449	2,2 K	0,1W
3039	482205011002	1 K	0,16W
3040	482205120479	47 R	0,1W
3041	482211652175	100 R	0,16W
3070	482211683884	47 K	0,16W
3071	482211711139	1,5 K	0,1W
3072	482205120822	8,2 K	0,1W
3073	482211710833	10 K	0,1W
3074	482211683933	15 K	
3075	482205120101	100 R	0,1W
3076	482211710965	18 K	0,1W
3077	482205110102	1 K	0,1W
3078	482205120122	1,2 K	0,1W
3079	482205011002	1 K	0,16W
3080	482211711449	2,2 K	0,1W
3081	482211683884	47 K	0,16W
3082	482211710833	10 K	0,1W
3083	482205011002	1 K	0,16W
3084	482205120223	22 K	0,1W
3085	482211710833	10 K	0,1W
3086	482210012158	22 K	
3087	482205120273	27 K	0,1W
3088	482211712955	2,7 K	0,1W
3089	482210130874	1 K	
3090	482205120392	3,9 K	0,1W
3091	482205120822	8,2 K	0,1W
3092	482211711139	1,5 K	0,1W
3093	482211711383	12 K	0,1W
3094	482205120104	100 K	0,1W
3095	482205120333	33 K	0,1W
3096	482211652276	3,9 K	0,16W
3100	482205120562	5,6 K	0,1W
3101	482205120472	4,7 K	0,1W
3102	482205120681	680 R	0,1W
3103	482211683933	15 K	
3105	482205110102	1 K	0,1W
3106	482205022202	2,2 K	
3107	482205120331	330 R	0,1W
3108	482211710833	10 K	0,1W
3109	482211713579	220 K	0,1W
3110	482211712342	18 K	
3110	212010892629	22 K	
3110	482211712024	27 K	
3111	482205120331	330 R	0,1W
3112	482211652175	100 R	0,16W
3150	482211652176	10 R	0,16W
3151	482211652176	10 R	0,16W
3152	482205120122	1,2 K	0,1W
3153	482211711503	220 R	0,1W
3154	482211712955	2,7 K	0,1W
3155	482205120471	470 R	0,1W
3156	482205120101	100 R	0,1W
3157	482205120561	560 R	0,1W
3158	482211711383	12 K	0,1W
3159	482205120101	100 R	0,1W
3161	482211710833	10 K	0,1W
3162	482211710833	10 K	0,1W
3163	482211683864	10 K	0,16W
3164	482211652195	47 R	0,16W
3166	482211683884	47 K	0,16W
3300	482211652228	680 R	0,16W
3301	482211652219	330 R	0,16W
3302	482211652289	5,6 K	0,16W
3303	482205120333	33 K	0,1W
3304	482205120154	150 K	0,1W
3305	482211710965	18 K	0,1W
3306	482205120472	4,7 K	0,1W
3307	482210012158	22 K	
3308	482205120101	100 R	0,1W
3309	482211710965	18 K	0,1W
3310	482205120471	470 R	0,1W
3311	482205120332	3,3 K	0,1W
3312	482205120471	470 R	0,1W
3313	482211711503	220 R	0,1W
3314	482211711504	270 R	0,1W
3314	482205120331	330 R	0,1W
3315	482205110102	1 K	0,1W
3316	482205120472	4,7 K	0,1W
3318	482205120332	3,3 K	0,1W
3319	482205120101	100 R	0,1W
3320	482205120101	100 R	0,1W
3321	482205120472	4,7 K	0,1W
3322	482205120472	4,7 K	0,1W
3323	482211652263	2,7 K	0,16W
3325	482205120472	4,7 K	0,1W

▲ ... Safety component, use only this type

Recorder Unit Board (RUBAD)

3450 ▲	482205210228	2,2 R	
3451	482205120223	22 K	0,1W
3452	482205120471	470 R	0,1W
3453	482211683872	220 R	0,16W
3454	482211652283	4,7 K	0,16W
3455	482211680176	1 R	0,16W
3456	482211710834	47 K	0,1W
3457	482205120392	3,9 K	0,1W
3458	482211652283	4,7 K	0,16W
3459	482211652283	4,7 K	0,16W
3460	482211683881	390 R	0,16W
3461	482211683864	10 K	0,16W
3462	482211652264	27 K	0,16W
3463	482211652257	22 K	0,16W
3464	482211711149	82 K	0,1W
3465	482211652244	15 K	0,16W
3466	482211683883	470 R	0,16W
3467	482205120225	2,2 M	
3468	482205120104	100 K	0,1W
3469	482205120104	100 K	0,1W
3470	482211652283	4,7 K	0,16W
3471	482205120101	100 R	0,1W
3472	482205120101	100 R	0,1W
3473	482211652175	100 R	0,16W
3474	482205120391	390 R	0,1W
3475	482205120273	27 K	0,1W
3476	482211652283	4,7 K	0,16W
3477	482205110102	1 K	0,1W
3501	482211711139	1,5 K	0,1W
3502	482205120182	1,8 K	0,1W
3503	482211711139	1,5 K	0,1W
3504	482205120101	100 R	0,1W
3505	482205120479	47 R	0,1W
3506	482205120223	22 K	0,1W
3507	482205120479	47 R	0,1W
3508	482205120471	470 R	0,1W
3509	482205120153	15 K	0,1W
3510	482205120471	470 R	0,1W
3511	482211652175	100 R	0,16W
3600	482211683884	47 K	0,16W
3601	482205120225	2,2 M	
3602	482205120822	8,2 K	0,1W
3603	482211652175	100 R	0,16W
3604	482211652175	100 R	0,16W
3606	482205120822	8,2 K	0,1W
3607	482211683883	470 R	0,16W
3608	482211652256	2,2 K	0,16W
3609	482211652289	5,6 K	0,16W
3610	482205120153	15 K	0,1W
3610	482211711383	12 K	0,1W
3611	482205120223	22 K	0,1W
3612	482211710833	10 K	0,1W
3613	482211652269	3,3 K	0,16W
3614	482211652191	33 R	0,16W
3615	482211711507	6,8 K	0,1W
3616	482205120153	15 K	0,1W
3616	482211710965	18 K	0,1W
3617	482205120223	22 K	0,1W
3618	482205120472	4,7 K	0,1W
3619	482205120822	8,2 K	0,1W
3620	482205120475	4,7 M	0,1W
3621	482211652228	680 R	0,16W
3622	482211683884	47 K	0,16W
3623	482211652257	22 K	0,16W
3624	482205120822	8,2 K	0,1W
3625	482211652256	2,2 K	0,16W
3626	482211711383	12 K	0,1W
3627	482211652251	18 K	0,16W
3628	482211711449	2,2 K	0,1W
3629	482211652195	47 R	0,16W
3630	482210012159	100 K	
3631	482211711952	390 K	
3632	482211711449	2,2 K	0,1W
3633	482211710834	47 K	0,1W
3634	482205120101	100 R	0,1W
3634	482205120681	680 R	0,1W
3635	482205120109	10 R	0,1W
3636	482205120391	390 R	0,1W
3637	482205120158	1,5 R	
3638	482210012157	10 K	
3639	482211711383	12 K	0,1W
3640	482211711383	12 K	0,1W
3642	482211710834	47 K	0,1W
3643	482211710834	47 K	0,1W
3644	482205120561	560 R	0,1W
3645	482205120229	22 R	0,1W
3651	482211652303	8,2 K	0,16W
3653	482211712708	39 K	
3654	482205011002	1 K	0,16W
3655	482211652175	100 R	0,16W
3656	482211652175	100 R	0,16W
3657	482211712955	2,7 K	0,1W
3658	482205120333	33 K	0,1W
3659	482211712955	2,7 K	0,1W
3660	482205120333	33 K	0,1W
3661	482211683883	470 R	0,16W
3664	482211683864	10 K	0,16W
3670	482211683864	10 K	0,16W
3671	482211683884	47 K	0,16W
3672	482211652175	100 R	0,16W
3673	482211652175	100 R	0,16W
3674	482211652175	100 R	0,16W
3675	482211652175	100 R	0,16W
3800	482211683864	10 K	0,16W
3801	482205120333	33 K	0,1W
3802	482211711449	2,2 K	0,1W
3803	482211683864	10 K	0,16W
3804	482211652244	15 K	0,16W
3805 ▲	212010690597	10 R	FUSE
3806	482211683884	47 K	0,16W
3807	482211711449	2,2 K	0,1W
3808	482211711449	2,2 K	0,1W
3809	482211652303	8,2 K	0,16W
3810	482211710834	47 K	0,1W
3811	482211711148	56 K	0,1W
3812 ▲	212010690597	10 R	FUSE
3813	482205120101	100 R	0,1W
3814	482205120101	100 R	0,1W
3815	482211683883	470 R	0,16W
3816	482211710833	10 K	0,1W
3816	482205120105	1 M	0,1W
3817	482211652175	100 R	0,16W
3818	482211652219	330 R	0,16W
3819	482211652219	330 R	0,16W
3820	482211652219	330 R	0,16W
3821	482211652219	330 R	0,16W
3822	482211652175	100 R	0,16W
3823	482211652175	100 R	0,16W
3824	482205120101	100 R	0,1W
3825	482205120101	100 R	0,1W
3826	482205120101	100 R	0,1W
3827	482205120472	4,7 K	0,1W
3828	482211711449	2,2 K	0,1W
3829	482211711449	2,2 K	0,1W
3830	482211710833	10 K	0,1W
3831	482211710833	10 K	0,1W
3832	482211683864	10 K	0,16W
3833	482205120101	100 R	0,1W
3834	482205120472	4,7 K	0,1W
3836	482211652231	820 R	0,16W
3837	482205120101	100 R	0,1W
3838	482205011002	1 K	0,16W
3839	482205011002	1 K	0,16W
3840	482211711449	2,2 K	0,1W
3841	482205120101	100 R	0,1W
3842	482205120472	4,7 K	0,1W
3843	482205011002	1 K	0,16W
3844	482205120472	4,7 K	0,1W
3845	482211652175	100 R	0,16W
3846	482211683864	10 K	0,16W

Recorder Unit Board (RUBAD)

3847	482211711503	220 R	0,1W
3848	482211683883	470 R	0,16W
3849	482211652175	100 R	0,16W
3850	482211710834	47 K	0,1W
3851	482211652175	100 R	0,16W
3852	482211652283	4,7 K	0,16W
3853	482211652283	4,7 K	0,16W
3854	482205011002	1 K	0,16W
3855	482211683864	10 K	0,16W
3856	482211710834	47 K	0,1W
3857	482205011002	1 K	0,16W
3858	482211652283	4,7 K	0,16W
3859	482211710833	10 K	0,1W
3860	482211710833	10 K	0,1W
3861	482211710833	10 K	0,1W
3862	482211710833	10 K	0,1W
3863	482211710833	10 K	0,1W
3864	482211710833	10 K	0,1W
3865	482211652219	330 R	0,16W
3866	482211683864	10 K	0,16W
3867	482211710833	10 K	0,1W
3868	482211683883	470 R	0,16W
3869	482211652257	22 K	0,16W
3870	482211683876	270 R	0,16W
3871	482205120101	100 R	0,1W
3872	482205120223	22 K	0,1W
3873	482211683872	220 R	0,16W
3874	482211710833	10 K	0,1W
3875	482211652175	100 R	0,16W
3876	482211683884	47 K	0,16W
3877	482205011002	1 K	0,16W
3878	482205110102	1 K	0,1W
3879	482211652206	120 R	0,16W
3881	482211711449	2,2 K	0,1W
3882	482211683883	470 R	0,16W
3883	482205120101	100 R	0,1W
3884	482211683864	10 K	0,16W
3885	482211652256	2,2 K	0,16W
3886	482205120101	100 R	0,1W
3887	482205120223	22 K	0,1W
3888	482205110102	1 K	0,1W
3889	482211652175	100 R	0,16W
3890	482211683864	10 K	0,16W
3891	482205110102	1 K	0,1W
3892	482211652191	33 R	0,16W
3893	482211652256	2,2 K	0,16W
3894	482211711507	6,8 K	0,1W
3895	482211710834	47 K	0,1W
3896	482211652283	4,7 K	0,16W
3897	482211711449	2,2 K	0,1W
3898	482211711504	270 R	0,1W
3899	482211652213	180 R	0,16W
3900	482211652283	4,7 K	0,16W
3901	482211710834	47 K	0,1W
3902	482211710833	10 K	0,1W
3903	482205110102	1 K	0,1W
3904	482211683864	10 K	0,16W
3905	482211683864	10 K	0,16W
3906	482205011002	1 K	0,16W
3907	482211683864	10 K	0,16W
3908	482211652175	100 R	0,16W
3909	482205110102	1 K	0,1W
3910	482211683872	220 R	0,16W
3911	482205120101	100 R	0,1W
3912	482211652186	22 R	0,16W
3913	482211652283	4,7 K	0,16W
3914	482205012704	270 K	
3915	482211652257	22 K	0,16W
3916	482205120471	470 R	0,1W
3917	482205120471	470 R	0,1W
3918	482211711448	180 R	0,1W
3919	482205120122	1,2 K	0,1W
3920	482211711449	2,2 K	0,1W
3921	482211652175	100 R	0,16W
3922	482211710833	10 K	0,1W
3923	482205120472	4,7 K	0,1W
3924	482211683883	470 R	0,16W
3925	482211683884	47 K	0,16W
3926	482211710833	10 K	0,1W
3927	482211652175	100 R	0,16W
3928	482205120101	100 R	0,1W
3929	482211652175	100 R	0,16W
3930	482211683884	47 K	0,16W
3931	482205120108	1 R	
3932	482211652175	100 R	0,16W
3933	482211652175	100 R	0,16W
3934	482211652175	100 R	0,16W
3935	482211711507	6,8 K	0,1W
3936	482211711507	6,8 K	0,1W
3937	482205120332	3,3 K	0,1W
3938	482205120472	4,7 K	0,1W
3939	482211711449	2,2 K	0,1W
3940	482211711449	2,2 K	0,1W
3941	482211711139	1,5 K	0,1W
3942	482211652213	180 R	0,16W
3943	482205110102	1 K	0,1W
3944	482211652213	180 R	0,16W
3945	482211683864	10 K	0,16W
3946	482211683864	10 K	0,16W
3947	482211652175	100 R	0,16W
3948	482205120472	4,7 K	0,1W
3949	482211683883	470 R	0,16W
3950	482205120472	4,7 K	0,1W
3951	482211652175	100 R	0,16W
3952	482211683883	470 R	0,16W
3956	482211652228	680 R	0,16W
3959	482205120101	100 R	0,1W
3960	482205120101	100 R	0,1W
3961	482211652234	100 K	0,16W
3962	482211652175	100 R	0,16W
3963	482205120101	100 R	0,1W
3964	482205120474	470 K	0,1W
3965	482211711507	6,8 K	0,1W
3966	482205120105	1 M	0,1W
3967	482205120105	1 M	0,1W
3968	482211711507	6,8 K	0,1W
3970	482211710833	10 K	0,1W
3971	482211683864	10 K	0,16W
3973	482211652175	100 R	0,16W
3974	482211652175	100 R	0,16W
3976	482211683864	10 K	0,16W
3980	482211711503	220 R	0,1W
3981	482211711503	220 R	0,1W
3982	482211683872	220 R	0,16W
3983	482211683872	220 R	0,16W
3984	482211711503	220 R	0,1W
3985	482211683872	220 R	0,16W
3986	482211683872	220 R	0,16W
3987	482211683872	220 R	0,16W
3991	482211711449	2,2 K	0,1W
3992	482205120474	470 K	0,1W
3993	482205120474	470 K	0,1W
3994	482211711449	2,2 K	0,1W
3995	482205120333	33 K	0,1W
3996	482205120474	470 K	0,1W
3997	482211652234	100 K	0,16W
3998	482211710833	10 K	0,1W
3999	482211710833	10 K	0,1W

CHIP JUMPER

4000	482205120008	CHIP JUMPER
4011	482205120008	CHIP JUMPER
4021	482205120008	CHIP JUMPER
4022	482205120008	CHIP JUMPER
4023	482205120008	CHIP JUMPER
4111	482205120008	CHIP JUMPER
4112	482205120008	CHIP JUMPER
4113	482205120008	CHIP JUMPER

▲ ... Safety component, use only this type

Recorder Unit Board (RUBAD)

4114	482205120008	CHIP JUMPER
4115	482205120008	CHIP JUMPER
4116	482205120008	CHIP JUMPER
4117	482205120008	CHIP JUMPER
4198	482205120008	CHIP JUMPER
4199	482205120008	CHIP JUMPER
4302	482205120008	CHIP JUMPER
4303	482205120008	CHIP JUMPER
4304	482205120008	CHIP JUMPER
4305	482205120008	CHIP JUMPER
4306	482205120008	CHIP JUMPER
4307	482205120008	CHIP JUMPER
4308	482205120008	CHIP JUMPER
4321	482205120008	CHIP JUMPER
4323	482205120008	CHIP JUMPER
4324	482205120008	CHIP JUMPER
4325	482205120008	CHIP JUMPER
4326	482205120008	CHIP JUMPER
4499	482205120008	CHIP JUMPER
4601	482205120008	CHIP JUMPER
4602	482205120008	CHIP JUMPER
4603	482205120008	CHIP JUMPER
4620	482205120008	CHIP JUMPER
4621	482205120008	CHIP JUMPER
4642	482205120008	CHIP JUMPER
4643	482205120008	CHIP JUMPER
4644	482205120008	CHIP JUMPER
4645	482205120008	CHIP JUMPER
4646	482205120008	CHIP JUMPER
4800	482205120008	CHIP JUMPER
4801	482205120008	CHIP JUMPER
4802	482205120008	CHIP JUMPER
4803	482205120008	CHIP JUMPER
4804	482205120008	CHIP JUMPER
4805	482205120008	CHIP JUMPER
4806	482205120008	CHIP JUMPER
4807	482205120008	CHIP JUMPER
4808	482205120008	CHIP JUMPER
4827	482205120008	CHIP JUMPER
4830	482205120008	CHIP JUMPER
4831	482205120008	CHIP JUMPER
4836	482205120008	CHIP JUMPER
4838	482205120008	CHIP JUMPER
4839	482205120008	CHIP JUMPER
4903	482205120008	CHIP JUMPER
4960	482205120008	CHIP JUMPER
4961	482205120008	CHIP JUMPER

COILS

5001	482215751462	10µH
5002	482215711145	150µH
5003	482215751462	10µH
5004	482215711149	56µH
5005	482215711142	47µH
5006	482215710972	15µH
5007	482215711706	10µH
5008	482215711228	100µH
5009	482215711228	100µH
5070	482215711139	6,8µH
5071	482215711149	56µH
5072	482215711706	10µH
5073	482215711235	22µH
5074	242253594699	27µH
5100	482215711142	47µH
5150	319801813370	330nH
5160	242253594885	470µH
5300	482215770877	0,256µH
5301	482215770877	0,256µH
5302	482215710972	15µH
5303	482215711231	1µH
5304	482215711525	6,8µH
5305	482215711525	6,8µH
5307	482215711231	1µH
5308	482215771206	COIL BLM21
5471	319801813370	330nF
5600	482215711249	10mH
5601	482215711249	10mH
5602	482215753531	COIL ASSY
5604	482215771206	COIL BLM21
5640	482215750961	22µH
5641	482215810604	6,8µH
5670	482215751462	10µH
5671	482215751462	10µH
5672	482215711228	100µH
5900	482215771206	COIL BLM21
5901	482215711706	10µH
5902	482215771206	COIL BLM21
5903	482215711706	10µH
5960	482215711139	6,8µH
5991	242252700513	BUZZER PIEZO CB13PA-X5

DIODES

6150	482213034173	BZX79-C5V6
6151	482213034173	BZX79-C5V6
6152	482213030621	1N4148
6153	482213030621	1N4148
6154	482213034173	BZX79-C5V6
6160	482213032245	BYV10-40
6161	482213032245	BYV10-40
6300	482213010414	BA792
6301	482213010414	BA792
6303	482213010414	BA792
6304	482213010414	BA792
6460	482213010231	Kit: 2x Sens. + 1x LED
6600	482213030861	BZX79-B7V5
6601	482213011031	BZX284-C12
6670	482213030621	1N4148
6671	482213034174	BZX79-C4V7
6672	532213031504	BZX79-C3V3
6801	482213083092	LED RED TLHR4205
6802	482213083092	LED RED TLHR4205
6803	482213083092	LED RED TLHR4205
6956	482213031983	BAT85
6970	482213031983	BAT85
6991	482213083757	BAS216
6992	482213083757	BAS216

TRANSISTORS AND IC's

7000	482213060511	BC847B
7002	482220915526	LC89980M
7003	532213060508	BC857B
7004	482220916883	LA71527M
7005	482213060511	BC847B
7007	482213010872	PDTA124ET
7010	482213060511	BC847B
7011	532213042718	BFS20
7012	532213042718	BFS20
7013	482213060511	BC847B
7014	532213060508	BC857B
7070	532213060508	BC857B
7071	482213060511	BC847B
7072	932213179682	LA7339
7073	482213060511	BC847B
7074	482213060511	BC847B
7100	482213010872	PDTA124ET
7102	482213010872	PDTA124ET
7103	482213060511	BC847B
7104	482220913121	STV5742DT
7105	482220915548	STV5744ADT
7106	482213063732	PDTC124ET
7150	482213041246	BC327-25
7151	482213041246	BC327-25
7152	482213060511	BC847B
7153	482213060511	BC847B

⚠ ... Safety component, use only this type

7155	482213060511	BC847B
7157	482213060511	BC847B
7160	482213060511	BC847B
7161	482213041246	BC327-25
7300	482213063732	PDTC124ET
7301	933372960653	HEF4053BT
7302	482213063732	PDTC124ET
7304	482213063732	PDTC124ET
7305	532213060508	BC857B
7307	482213063732	PDTC124ET
7308	482213063732	PDTC124ET
7309	935260611118	TDA9818T/V1
7309	935262113118	TDA9817T/V1
7440	482220930146	L2722
7442	482213060511	BC847B
7443	482220930836	SAA1310/N2
7446	482220913126	TDA5241
7461	482213010231	Kit: 2x Sens. + 1x LED
7462	482213010231	Kit: 2x Sens. + 1x LED
7464	482213010233	OPT CP TCRT5000L
7465	482213010233	OPT CP TCRT5000L
7501	532213060508	BC857B
7502	532213060508	BC857B
7503	933372960653	HEF4053BT
7504	532213060508	BC857B
7505	532213042718	BFS20
7600	482213060511	BC847B
7601	482213060511	BC847B
7602	482213060373	BC856B
7603	482213041246	BC327-25
7604	532213060159	BC846B
7605	532213060159	BC846B
7606	482213060511	BC847B
7607	482213042615	BC817/40
7640	935261579557	TDA9605H
7670	932213150668	MSP3415D
7800	532220961472	LM393DT
7801	482213010234	OPT CP TCST1030L
7802	482213060511	BC847B
7803	482213060511	BC847B
7807	532213060508	BC857B
7808	482213041344	BC337-40
7810	482221811745	OPT SEN TSOP1736
7811	482213060511	BC847B
7815	532213060508	BC857B
7816	532213060508	BC857B
7817	482213010872	PDTA124ET
7818	482220916954	ST24E16M6
7900	482220916884	TMP93C071F
7901 ⚠	310317855310	FLASH ROM DTAP2 (programmed)
7901 ⚠	310317855320	FLASH ROM DTAP1 (programmed)
7901	310317855200	FLASH ROM DTAP5 (programmed)
7902	932213052668	CY62256LL
7903	482220916778	TL7705
7960	482220915504	SDA 5650
7970	482220990425	PCF8593P
7971	482213060511	BC847B
7991	482213060511	BC847B
7992	482213060511	BC847B
7993	482213060511	BC847B
7994	482220973852	PMBT2369
7995	482213010802	FETSIG BSH101
7996	482213010802	FETSIG BSH101

MISCELLANEOUS

1800	482224210434	CRYSTAL 18,43MHz
1801	482224210434	CRYSTAL 18,43MHz
1974	242202516133	CONNECTOR 15 Pins
1975	242202516133	CONNECTOR 15 Pins
1976	482226710618	CONNECTOR 7 Pins

CAPACITORS

2800	532212610225	1,5 pF	50V
2801	532212610225	1,5 pF	50V
2804	482212421732	10 µF	25V
2809	482212421732	10 µF	25V
2810	482212613196	100 nF	16V
2811	482212421732	10 µF	25V
2812	482212421732	10 µF	25V
2813	482212610002	100 nF	50V
2814	482212233177	10 nF	50V
2815	482212421732	10 µF	25V
2816	482212233177	10 nF	50V
2817	482212613196	100 nF	16V
2818	482212613196	100 nF	16V
2821	482212421732	10 µF	25V
2822	482212421732	10 µF	25V
2823	482212613693	56 pF	50V
2824	482212613693	56 pF	50V
2825	482212421732	10 µF	25V
2826	482212613693	56 pF	50V
2827	532212234123	1 nF	50V
2828	532212234123	1 nF	50V
2829	482212613196	100 nF	16V
2830	482212613836	1 µF	16V
2831	482212440769	4,7 µF	50V
2832	482212613836	1 µF	16V
2833	482212613836	1 µF	16V
2834	532212610225	1,5 pF	50V
2835	532212610225	1,5 pF	50V
2836	482212233177	10 nF	50V
2837	482212421732	10 µF	25V
2838	482212233177	10 nF	50V
2840	532212234123	1 nF	50V
2841	532212234123	1 nF	50V
2844	532212234123	1 nF	50V
2845	532212234123	1 nF	50V
2900	482212613836	1 µF	16V
2901	482212421732	10 µF	25V
2903	482212613836	1 µF	16V
2904	532212232658	22 pF	50V
2905	482212613836	1 µF	16V
2906	482212421732	10 µF	25V
2908	482212613836	1 µF	16V
2909	482212480231	47 µF	16V
2910	532212232658	22 pF	50V
2927	482212613196	100 nF	16V
2929	482212613836	1 µF	16V
2930	482212613836	1 µF	16V

RESISTORS

3800	482211652175	100 R	0,16W
3801	482211652175	100 R	0,16W
3802	482211710833	10 K	0,1W
3804	482205120101	100 R	0,1W
3805	482211710834	47 K	0,1W
3806	482205120101	100 R	0,1W
3808	482211710833	10 K	0,1W
3809	482211710833	10 K	0,1W
3810	482211683881	390 R	0,16W
3811	482211683881	390 R	0,16W
3812	482211683864	10 K	0,16W
3900	482211710833	10 K	0,1W
3902	482211683883	470 R	0,16W

⚠ ... Safety component, use only this type

3903	482211713579	220 K	0,1W
3905	482205011002	1 K	0,16W
3907	482211652234	100 K	0,16W
3908	482205120104	100 K	0,1W
3909	482211713579	220 K	0,1W
3911	482211683883	470 R	0,16W
3912	482205120104	100 K	0,1W
3914	482205011002	1 K	0,16W
3915	482211710833	10 K	0,1W
3918	482211652234	100 K	0,16W

CHIP JUMPER

4811	482205120008	CHIP JUMPER
4815	482205120008	CHIP JUMPER
4816	482205120008	CHIP JUMPER
4820	482205120008	CHIP JUMPER
4824	482205120008	CHIP JUMPER
4826	482205120008	CHIP JUMPER
4832	482205120008	CHIP JUMPER

COILS

5800	482215711706	10µH
5801	482215711706	10µH
5803	482215711706	10µH
5804	482215711228	100µH
5805	482215711706	10µH

DIODES, TRANSISTORS & IC's

6801	482213083757	BAS216
7801	482220915832	MSP3410D-B4
7802	932213147682	DPL3518A
7900	482220970672	LM358N
7901	532213042755	BC847C
7902	482213010872	PDTA124ET
7904	532213042755	BC847C
7905	482213010872	PDTA124ET
7913	482213011155	PDTC114ET

1701 ▲	242212802786	MAINS SWITCH
1702 ▲	482225630274	FUSE HOLDER
1703 ▲	482207031602	FUSE T 1,6A
1705	482225211215	SURGE PROTECTION
1935	482226520723	CONNECTOR 2 Pins
2708 ▲	202233000018	470 nF
3702	482211621227	VDR 470V
3714	482211683872	220 R
3715 ▲	482205321335	3,3 M
5709	242254944161	MAINS FILTER HF2430B
5710 ▲	312121861321	MAINS FILTER TU305B2